TECHNICAL MANUAL

OPERATION AND MAINTENANCE INSTRUCTIONS WITH PARTS BREAKDOWN

AN/USM-281D and AN/USM-281E OSCILLOSCOPE

DUMONT OSCILLOSCOPE LABORATORIES INC.

Contract Nos. N00126-72-C-0477
N00126-73-D-0088

Published by direction of Commander, Naval Electronic Systems Command.

2 JANUARY 1974

Reproduction for non-military use of the information or illustrations contained in this publication is not permitted. The policy for military use reproduction is established for the Army in AR380-5, for the Navy and Marine Corps in OPNAVINST 5510.1B, and for the Air Force in Air Force Regulation 205–1.

LIST OF EFFECTIVE PAGES

Insert latest changed pages; dispose of superseded pages in accordance with applicable regulations.

NOTE: On a changed page, the portion of the text affected by the latest change is indicated by a vertical line, or other change symbol, in the outer margin of the page. Changes to illustrations are indicated by miniature pointing hands. Changes to wiring diagrams are indicated by shaded areas.

Total number of pages in this manual is 378 consisting of the following:

Page No.	# Change No.
Title	0
A	0
i - vii	0
viii	0
blank/1-0	0
1-1 thru 1-12	0
2-1 - 2-14	0
3-1 - 3-7	0
3-8 blank	0
3-9	0
3-10 blank	0
3-11	0
3-12 blank	0
3-13	0
3-14 blank	0
3-15	0
3-16 blank	0
3-17	0
3-18 blank	0
3-19	0
3-20 blank	0
3-21	0
3-22 blank	0
3-23	0
3-24 blank	0
3-25	0
3-26 blank	0
3-27	0
3-28 blank	0
3-29	0
3-30 blank	0
3-31	0
3-32 blank	0
3-33	0
3-34 blank	0
4-1 - 4-16	0
5-1 - 5-11	0
5-12 blank	0
5-13	0
5-14 blank	0
5-15	0
5-16 blank	0
5-17	0
5-18 blank	0
5-19	0
5-20 blank	0
5-21	0
5-22 blank	0
5-23	0
5-24 blank	0
5-25	0
5-26 blank	0
5-27	0
5-28 blank	0
5-29	0
5-30 blank	0
5-31	0
5-32 blank	0
5-33	0
5-34 blank	0
5-35	0
5-36 blank	0
5-37	0
5-38 blank	0
5-39	0
5-40 blank	0
5-41	0
5-42 blank	0
5-43	0
5-44 blank	0
5-45	0
5-46 blank	0
5-47	0
5-48 blank	0
5-49	0
5-50 blank	0
5-51	0
5-52 blank	0
5-53	0
5-54 blank	0
5-55	0
5-56 blank	0
5-57	0
5-58 blank	0
5-59	0
5-60 blank	0
5-61	0
5-62 blank	0
5-63	0
5-64 blank	0
5-65	0
5-66 blank	0
6-1 - 6-20	0
7-1 - 7-51	0
7-52 blank	0
7-53	0
7-54 blank	0
7-55	0
7-56 blank	0
7-57	0
7-58 blank	0
7-59	0
7-60 blank	0
7-61 - 7-67	0
7-68 blank	0
7-69	0
7-70 blank	0
7-71	0
7-72 blank	0
7-73 - 7-75	0
7-76 blank	0
7-77	0
7-78 blank	0
7-79	0
7-80 blank	0
7-81 - 7-83	0
7-84 blank	0
7-85	0
7-86 blank	0
7-87	0
7-88 blank	0
7-89 - 7-97	0
7-98 blank	0
7-99 - 7-107	0
7-108 blank	0
7-109	0
7-110 blank	0
7-111	0
7-112 blank	0
7-113	0
7-114 blank	0
7-115	0
7-116 blank	0
8-1 - 8-2	0
A-1 - A-82	0
Index 1 - 4	0

#Zero in this column indicates an original page.

RECORD OF CHANGES

CHANGE NO.	DATE	TITLE OR BRIEF DESCRIPTION	ENTERED BY

VALIDATION PERFORMANCE

Title of Publication: TECHNICAL MANUAL OPERATION AND MAINTENANCE INSTRUCTIONS WITH PARTS BREAKDOWN AN/USM-281D AND E OSCILLOSCOPE

NAVELEX Number: 0969-162-5010

Contractor: DUMONT OSCILLOSCOPE LABS., INC.
40 FAIRFIELD PLACE
WEST CALDWELL, N.J. 07006

Sub-Contractor (if performing validation): N/A

Contract No(s) and Purchase Orders, if applicable

N00126-72-C-0477
N00126-73-D-0088

Chapter	Section	Paragraph	Date Validation Completed	Check here if not validated
1	N/A	All	12/17/73	
2	N/A	All	12/17/73	
3	N/A	All	12/17/73	
4	N/A	All	12/17/73	
5	N/A	All	12/17/73	
6	I & II	All	12/17/73	
7	N/A	All	12/17/73	
8	N/A	All	12/17/73	
Appendix A	N/A	All	12/17/73	

Name & Authority of Validating Officer:

PAT ZAGARIA
NATIONAL SALES MGR. DUMONT

Signature of Validating Officer:

Pat Zagaria

Content Assurance Page

TABLE OF CONTENTS

Page

LIST OF ILLUSTRATIONS
LIST OF TABLES
INTRODUCTIONS

Chapter

1 GENERAL INFORMATION 1-1

1-1. Introduction 1-1
1-3. Equipment Description 1-1
1-6. AN/USM-281D Oscilloscope 1-1
1-7. OS-246(P)/U Oscilloscope 1-1
1-8. AM-6566/U Dual Trace Oscilloscope Plug-In Unit 1-1
1-9. TD-1086/U Time Base-Delay Oscilloscope Plug-In Unit 1-1
1-10. Oscilloscope Cover 1-1
1-11. Reference Data 1-1
1-12. Equipment Supplied 1-1
1-13. Equipment Required But Not Supplied 1-1
1-14. Field or Factory Changes 1-1

2 OPERATION 2-1

2-1. Introduction 2-1
2-3. Controls, Indicators and Connectors 2-1
2-5. Operating Procedures 2-1
2-7. Operator Turn-On Procedures 2-1
2-9. Normal Sweep Single Channel Operating Procedures 2-1
2-11. Normal Sweep Dual Channel Operating Procedures 2-1
2-13. XY Mode Operating Procedures 2-1
2-15. X-YY Mode Operating Procedures 2-3
2-17. Operator's Maintenance 2-3

3 FUNCTIONAL DESCRIPTION 3-1

3-1. Introduction 3-1
3-2. Capabilities 3-1
3-3. External Outputs 3-1
3-4. Vertical Modes 3-1
3-6. Horizontal Modes 3-1
3-10. General Functional Description 3-1
3-11. Vertical Section 3-1
3-14. Horizontal Section 3-2
3-20. Detailed Circuit Description 3-2
3-21. Vertical Attenuators 3-2
3-22. Input Buffer Amplifiers 3-3
3-24. Vertical Pre-Amplifiers 3-3
3-26. Vertical Amplifier and Switch 3-3
3-27. Trigger Pre-Amplifier and Switch 3-3
3-28. Vertical Output Amplifier 3-4
3-30. Vertical and Trigger Mode Logic 3-4
3-34. Trigger Input Amplifiers 3-4
3-35. Comparator and Pulse Generator 3-5
3-36. Ramp Generators 3-5
3-43. Delayed Sweep Ramp Generator 3-6
3-45. Horizontal Output Amplifier 3-6
3-46. Z Axis Amplifier 3-7
3-47. Low Voltage Power Supply 3-7
3-50. High Voltage Power Supply 3-7

Chapter TABLE OF CONTENTS (Cont) Page

4 SCHEDULED MAINTENANCE 4-1

4-1. Introduction 4-1
4-3. Scheduled Maintenance Action Index 4-1
4-4. Preventive Maintenance Procedures 4-1
4-5. Disassembly 4-1
4-7. Miscellaneous Component Removal and Replacement 4-1
4-8. Instrument Cover Removal 4-1
4-9. CRT Removal and Replacement 4-2
4-10. Disassembly of Lower Section 4-5
4-11. Access to Timing Switch 4-5
4-12. Attenuator Removal 4-5
4-13. High Voltage Supply Assembly Removal and Replacement 4-6
4-14. Scheduled Performance Tests 4-7
4-16. High Frequency Bandwidth Check 4-7
4-21. Deflection Factor 4-7
4-26. Vertical Vernier Check 4-8
4-31. Common Mode Rejection Ratio 4-9
4-36. Vertical Mode Check 4-9
4-41. Main and Delayed Sweep Checks 4-10
4-46. Sweep Delay and Jitter Check 4-11
4-51. Display Mode Check 4-13
4-56. Internal Trigger Sensitivity Check 4-13
4-61. External Trigger Sensitivity Check 4-14
4-66. External Horizontal Amplifier Check 4-14
4-71. External Z Axis Check 4-15

5 TROUBLESHOOTING 5-1

5-1. Introduction 5-1
5-2. Symptom Recognition 5-1
5-3. Symptom Elaboration 5-1
5-4. Probable Faulty Function 5-1
5-5. Localizing the Faulty Function 5-1
5-6. Localizing Trouble to the Circuit 5-1
5-8. Overall Oscilloscope Troubleshooting 5-1
5-10. Troubleshooting Procedure 5-4
5-12. Overall Servicing Block Diagram 5-4
5-14. Test Points 5-4
5-16. Functional Section Troubleshooting 5-4
5-17. Low Voltage Power Supply Troubleshooting 5-4
5-18. High Voltage Power Supply Troubleshooting 5-5
5-20. Vertical Input Circuit Troubleshooting 5-5
5-21. Vertical Amplifier and Switch Troubleshooting 5-5
5-22. Trigger Pre-Amplifier and Switch Troubleshooting 5-5
5-23. Vertical Output Amplifier Troubleshooting 5-5
5-24. Vertical and Trigger Mode Logic Troubleshooting 5-6
5-25. Main Sweep and Trigger Input Circuit Troubleshooting 5-6
5-26. Main Sweep Ramp Generator Troubleshooting 5-6
5-27. Horizontal Output Amplifier Troubleshooting 5-6
5-28. Delayed Sweep Input Circuit Troubleshooting 5-6
5-29. Delayed Sweep Ramp Generator Troubleshooting 5-6
5-30. Unblanking Amplifier Troubleshooting 5-7

Chapter Page

6 CORRECTIVE MAINTENANCE 6-1

6-1. Introduction 6-1

Section I

Adjustments and Alignment 6-1

6-3. Tuning and Adjustment 6-1
6-4. Oscilloscope Assembly Adjustments 6-1
6-5. Removal of Cover 6-1
6-6. Low Voltage Power Supply Adjustment 6-2
6-10. High Voltage Power Supply Adjustment 6-2
6-14. Intensity Limit and Astigmatism Adjustments 6-4
6-20. Vertical Channel DC Balance Adjustment 6-5
6-22. Vertical Amplifier Gain Adjustments 6-5
6-25. Vertical Position Centering Adjustment 6-6
6-28. Delay Line Termination Adjustment 6-7
6-31. Attenuator and Input Capacitance Adjustments 6-9
6-34. Trigger Synchronization Adjustment 6-11
6-37. Horizontal Sweep and Trigger Adjustments 6-11
6-40. Horizontal Amplifier Adjustment 6-12
6-43. Horizontal Sweep Adjustments 6-13
6-46. Delayed Trigger and Sweep Adjustments 6-15
6-49. Unblanking Amplifier Adjustment 6-16

Section II

Repair 6-18

6-53. Etched Circuit Board Component Replacement 6-18
6-54. Etched Circuit Board Repair 6-19
6-55. Miscellaneous Component Replacement 6-19
6-56. CRT Removal 6-19
6-57. Attenuator Removal 6-20
6-58. Timing Switch 6-20
6-60. Fuse Replacement 6-20

7 PARTS LIST 7-1

7-1. Introduction 7-1
7-2. Notes 7-1
7-3. List of Major Components 7-1
7-4. List of Common Descriptions 7-1
7-5. List of Attaching Hardware 7-1
7-6. List of Manufacturers 7-1

8 INSTALLATION 8-1

8-1. General 8-1
8-3. Unpacking and Handling 8-1
8-5. Power Requirements 8-1
8-7. Site Selection 8-1
8-9. Plug-In Removal and Installation 8-1
8-11. Removal 8-1
8-12. Installation 8-1
8-13. Installation Requirements 8-1
8-15. Cable Assemblies 8-1

TABLE OF CONTENTS (Cont)

Chapter Page

8 INSTALLATION (Cont)

8-17. Test Probes....8-2
8-18. Test Cables....8-2
8-19. Adapters and Tee Connectors....8-2
8-20. Fuses....8-2
8-21. Inspection....8-2
8-23. Initial Turn-On and Adjustment....8-2

APPENDIX A. DIFFERENCE DATA FOR AN/USM-281E

A-1. Introduction A-1
A-3. General Information A-1
A-6. OS-246A(P)/U Oscilloscope A-2
A-7. Functional Description A-2
A-8. Vertical Output Amplifier A-2
A-9. Comparator and Pulse Generator A-2
A-10. Troubleshooting A-2
A-11. Corrective Maintenance A-2
A-12. Vertical Position Centering Adjustment A-2
A-15. Vertical Amplifier Response Adjustments A-3
A-18. Attenuator and Input Capacitance Adjustments A-4
A-21. Vertical Amplifier X5 Gain Adjustment A-5
A-24. Parts List A-6

LIST OF ILLUSTRATIONS

Number	Title	Page
1-1.	AN/USM-281D and AN/USM-281E Oscilloscope	1-0
1-2.	Major Assemblies of AN/USM-281D and AN/USM-281E Oscilloscope	1-2
2-1.	Front Panel Controls	2-2
2-2.	Rear Panel Controls	2-4
3-1.	Oscilloscope Block Diagram	3-9
3-2.	Vertical Attenuator, Simplified Schematic	3-11
3-3.	Input Buffer Amplifier, Simplified Schematic	3-13
3-4.	Vertical Pre-Amplifier, Simplified Schematic	3-15
3-5.	Vertical Amplifier and Switch, Simplified Schematic	3-17
3-6.	Trigger Pre-Amplifier and Switch, Simplified Schematic	3-19
3-7.	Vertical Output Amplifier, Simplified Schematic	3-21
3-8.	Vertical and Trigger Mode Logic, Simplified Schematic	3-23
3-9.	Trigger Input Amplifier (Main), Simplified Schematic	3-25
3-10.	Comparator and Pulse Generator, Simplified Schematic	3-27
3-11.	Main Sweep Ramp Generator, Simplified Schematic	3-29
3-12.	Delayed Sweep Ramp Generator, Simplified Schematic	3-31
3-13.	Horizontal Output Amplifier, Simplified Schematic	3-33
4-1	Cover Removal	4-1
4-2.	CRT Removal and Replacement	4-4
4-3.	Disassembly of Lower Section	4-5
4-4.	Access to Timing Switch	4-5
4-5.	Attenuator Removal	4-6
4-6.	Access to High Voltage Power Supply	4-6
4-7.	High Frequency Bandwidth Test Setup	4-7
4-8.	Deflection Factor, Test Setup	4-8
4-9.	Vertical Vernier Check, Test Setup	4-8
4-10.	Common Mode Rejection Ratio	4-9
4-11.	Vertical Mode Check, Test Setup	4-10
4-12.	Main and Delayed Sweep Checks	4-11
4-13.	CRT Display	4-11
4-14.	Sweep Delay and Jitter Check	4-11
4-15.	CRT Display	4-12
4-16.	Display Mode Check, Test Setup	4-13
4-17.	Internal Trigger Sensitivity Check	4-14
4-18.	External Trigger Sensitivity Check	4-15
4-19.	External Horizontal Amplifier	4-15
4-20.	External Z Axis, Test Setup	4-16
5-1	Overall Troubleshooting, Functional Dependency Diagram	5-9
5-2.	Low Voltage Power Supply Troubleshooting, Functional Dependency Diagram	5-9
5-3.	Vertical Section Troubleshooting, Functional Dependency Diagram	5-10
5-4.	Horizontal Section Troubleshooting, Functional Dependency Diagram	5-11
5-5.	Vertical Input Circuits, Functional Signal Flow Diagram	5-13
5-6.	Vertical Amplifier and Switch, Functional Signal Flow Diagram	5-15
5-7.	Trigger Pre-Amplifier and Switch, Functional Signal Flow Diagram	5-17
5-8.	Vertical Output Amplifier, Functional Signal Flow Diagram	5-19
5-9.	Vertical and Trigger Mode Logic, Functional Signal Flow Diagram	5-21
5-10.	Main Sweep and Trigger Input Amplifier, Comparator and Pulse Generator, Functional Signal Flow Diagram	5-23

LIST OF ILLUSTRATIONS (Cont)

Number	Title	Page
5-11.	Main Sweep Ramp Generator, Functional Signal Flow Diagram	5-25
5-12.	Delayed Sweep Trigger Input Amplifier, Comparator, Pulse Generator, Functional Signal Flow Diagram	5-27
5-13.	Delayed Sweep Ramp Generator, Functional Signal Flow Diagram	5-29
5-14.	Horizontal Output Amplifier, Functional Signal Flow Diagram	5-31
5-15.	Unblanking Amplifier, Functional Signal Flow Diagram	5-33
5-16.	Low Voltage Power Supply, Functional Signal Flow Diagram	5-35
5-17.	High Voltage Power Supply, Functional Signal Flow Diagram	5-37
5-18.	Block Diagram	5-39
5-19.	Vertical Attenuator	5-41
5-20.	Vertical Pre-Amplifier	5-43
5-21.	Vertical Output Amplifier	5-45
5-22.	Vertical Mode Logic	5-47
5-23.	Main Trigger and Sweep Generator	5-49
5-24.	Delayed Trigger and Sweep Generator	5-51
5-25.	Horizontal Output Amplifier	5-53
5-26.	Timing Switch	5-55
5-27.	Horizontal Mode Control	5-57
5-28.	Low Voltage Power Supply	5-59
5-29.	High Voltage Power Supply	5-61
5-30.	Interconnection Diagram	5-63
5-31.	Auxiliary Output Amplifier	5-65
6-1.	Cover Removal	6-1
6-2.	Removal of Plug-In Units	6-2
6-3.	Low Voltage Power Supply, Adjustments and Test Points	6-2
6-4.	Low Voltage Power Supply Adjustments	6-3
6-5.	High Voltage Power Supply, Test Setup	6-3
6-6.	High Voltage Power Supply Adjustment	6-4
6-7.	Vertical Amplifier Adjustment, Test Setup	6-6
6-8.	Vertical Position Centering Adjustment, Test Setup	6-7
6-9.	Vertical Position Centering Adjustments	6-7
6-10.	Delay Line Termination Adjustment, Test Setup	6-8
6-11.	Delay Line Termination Adjustments	6-8
6-12.	Delay Line Termination Adjustment Reflections	6-8
6-13.	Attenuator and Input Capacitance Adjustments	6-9
6-14.	Attenuator and Input Capacitance Adjustment, Test Setup	6-10
6-15.	Trigger Synchronization Adjustment	6-11
6-16.	Horizontal Sweep and Trigger Adjustments	6-12
6-17.	Horizontal Amplifier Adjustment	6-13
6-18.	Horizontal Sweep Adjustment, Test Setup	6-13
6-19.	Horizontal Sweep Adjustment, Test Points	6-14
6-20.	Horizontal Sweep Adjustment, CRT Display	6-15
6-21.	Delayed Trigger and Sweep Adjustments, Test Setup	6-15
6-22.	Delayed Trigger and Sweep Adjustments	6-15
6-23.	Unblanking Amplifier Adjustments, Test Setup	6-16
6-24.	Unblanking Amplifier Adjustments	6-17
6-25.	Fuse Location Diagram	6-17
7-1	Oscilloscope AN/USM-281D	7-51
7-2	Oscilloscope OS-246(P)/U (A1)	7-53
7-3	Display Section Assembly (A1A1)	7-55
7-4	Display Panel Assembly, Rear (A1A1A1)	7-59
7-5	Auxiliary Output Assembly (A1A1A1A1)	7-61
7-6	Horizontal Output Assembly(A1A1A2)	7-62
7-7	High Voltage Assembly (A1A1A3)	7-64

LIST OF ILLUSTRATIONS (Cont)

Number	Title	Page
7-8	High Voltage Chassis Assembly (A1A1A4)	7-65
7-9	Vertical Output Assembly (A1A1A5)	7-66
7-10	Display Panel Assembly (A1A1A6)	7-69
7-11	Section Assembly, Plug-in (A1A2)	7-71
7-12	Low Voltage Power Supply (A1A2A6)	7-73
7-13	Low Voltage Printed Circuit Assembly (A1A2A6A1)	7-74
7-14	Main Frame Cover (A1A3)	7-75
7-15	Dual Trace Oscilloscope Plug-in Unit (A2)	7-77
7-16	Logic Printed Circuit Assembly (A2A3)	7-81
7-17	Delay Line Assembly (A2A4)	7-83
7-18	Vertical Section Panel Assembly (A2A5)	7-85
7-19	Vertical Pre-Amplifier (A2A6)	7-89
7-20	Vertical Attenuator Assembly (A2A7)	7-92
7-21	Attenuator Switch Assembly (A2A7A1)	7-93
7-22	Attenuator Printed Circuit Assembly (A2A7A2)	7-95
7-23	Time Base Delay Oscilloscope Plug-in Unit (A3)	7-97
7-24	Time Switch Assembly (A3A1)	7-100
7-25	Main Sweep Assembly (A3A2)	7-102
7-26	Delayed Sweep Assembly (A3A5)	7-105
7-27	Time Base Function Assembly (A3A6)	7-109
7-28	Trigger Switch Assembly (A3A6A1)	7-113
7-29	Front Cover Assembly (A4)	7-115
8-1.	Removal of Plug-in Units	8-2
A-1.	Vertical Output Amplifier, Simplified Diagram	A-45
A-2.	Comparator and Pulse Generator, Simplified Diagram	A-46
A-3.	Vertical Output Amplifier, Functional Signal Flow Diagram	A-47
A-4.	Main Sweep and Trigger Input Amplifier, Comparator and Pulse Generator, Functional Signal Flow Diagram	A-48
A-5.	Delayed Sweep Trigger Input Amplifier Comparator, Functional Signal Flow Diagram	A-49
A-6.	Low Voltage Power Supply, Functional Signal Flow Diagram	A-50
A-7.	Vertical Output Amplifier	A-51
A-8.	Main Trigger and Sweep Generator	A-52
A-9.	Delayed Trigger and Sweep Assembly	A-53
A-10.	Low Voltage Power Supply	A-54
A-11.	Auxiliary Output Amplifier	A-55
A-12.	Vertical Position Centering Adjustment, Test Setup	A-56
A-13.	Vertical Amplifier Response Adjustments	A-56
A-14.	Attenuator and Input Capacitance Adjustments	A-57
A-15.	Attenuator and Capacitance Adjustment, Test Setup	A-57
A-16.	Display Section Assembly (A1A1)	A-58
A-17.	Auxiliary Output Assembly (A1A1A1A1)	A-60
A-18.	High Voltage Chassis Assembly (A1A1A4)	A-61
A-19.	Vertical Output Assembly (A1A1A5)	A-62
A-20.	Display Panel Assembly (A1A1A6)	A-64
A-21.	Low Voltage Printed Circuit Assembly (A1A2A6A1)	A-65
A-22.	Main Frame Cover (A1A3)	A-67
A-23.	Logic Printed Circuit Assembly (A2A3)	A-68
A-24.	Vertical Pre-Amplifier (A2A6)	A-70
A-25.	Main Sweep Assembly (A3A2)	A-73
A-26.	Delayed Sweep Assembly (A3A5)	A-76
A-27.	Time Base Function Assembly (A3A6)	A-79
A-28.	Trigger Switch Assembly (A3A6A1)	A-81
A-29.	Front Cover Assembly (A4)	A-82

LIST OF TABLES

Number	Title	Page
1-1.	Reference Data	1-3
1-2.	Equipment, Accessories and Documents Supplied	1-8
1-3.	Equipment and Publications Required But Not Supplied	1-9
1-4.	Field and Factory Changes	1-12
2-1.	Controls, Indicators and Connectors, Front Panel	2-5
2-2.	Controls and Connectors, Rear Panel	2-9
2-3.	Turn-On Procedures	2-10
2-4.	Single Channel Operating Procedure	2-12
2-5.	Dual Channel Operating Procedure	2-13
2-6.	XY Axis Calibration Control Settings	2-14
2-7.	X-YY Axis Calibration Control Settings	2-14
4-1.	Maintenance Actions	4-2
4-2.	Test Equipment and Adapters Required for Scheduled Performance Tests	4-3
4-3.	CRT Deflection	4-8
4-4.	Time Mark Settings	4-10
5-1.	Troubleshooting Index, Oscilloscope AN/USM-281D	5-2
5-2.	Relay and Lamp Index	5-2
5-3.	Fuse Index	5-2
5-4.	Maintenance Turn-On Procedure	5-3
6-1.	Attenuator Assembly Capacitors	6-18
7-1.	List of Major Components	7-1
7-2.	Oscilloscope AN/USM-281D	7-2
7-3.	List of Common Item Descriptions	7-37
7-4.	List of Attaching Hardware	7-49
7-5.	List of Manufacturer's Codes	7-50
A-1.	Oscilloscope OS-246A(P)/U(A1), Display Section Assembly A1A1, Parts List	A-7
A-2.	Oscilloscope OS-246A(P)/U(A1), Auxiliary Output Assembly A1A1A1A1, Parts List	A-8
A-3.	Oscilloscope OS-246A(P)/U(A1), High Voltage Chassis Assembly A1A1A4, Parts List	A-9
A-4.	Oscilloscope OS-246A(P)/U(A1), Vertical Output Assembly A1A1A5, Parts List	A-10
A-5.	Oscilloscope OS-246A(P)/U(A1), Display Panel Assembly A1A1A6, Parts List	A-14
A-6.	Oscilloscope OS-246A(P)/U(A1), Low Voltage Printed Circuit Assembly A1A2A6A1, Parts List	A-15
A-7.	Oscilloscope OS-246A(P)/U(A1), Main Frame Cover A1A3, Parts List	A-18
A-8.	Dual Trace Oscilloscope Plug-In Unit AM-6566A/U(A2), Logic Printed Circuit Assembly A2A3, Parts List	A-19
A-9.	Dual Trace Oscilloscope Plug-In Unit AM-6566A/U(A2), Vertical Pre-Amplifier A2A6, Parts List	A-22
A-10.	Time Base Delay Oscilloscope Plug-In Unit TD-1086A/U(A3), Main Sweep Assembly A3A2, Parts List	A-27
A-11.	Time Base Delay Oscilloscope Plug-In Unit TD-1086A/U(A3), Delayed Sweep Assembly A3A5, Parts List	A-32
A-12.	Time Base Delay Oscilloscope Plug-In Unit TD-1086A/U(A3), Time Base Function Assembly A3A6, Parts List	A-37
A-13.	Front Cover Assembly A4, Parts List	A-39
A-14.	List of Common Item Descriptions for AN/USM-281E Configuration	A-41
A-15.	List of Attaching Hardware for AN/USM-281E Configuration	A-43
A-16.	List of Manufacturers for AN/USM-281E Configuration	A-44

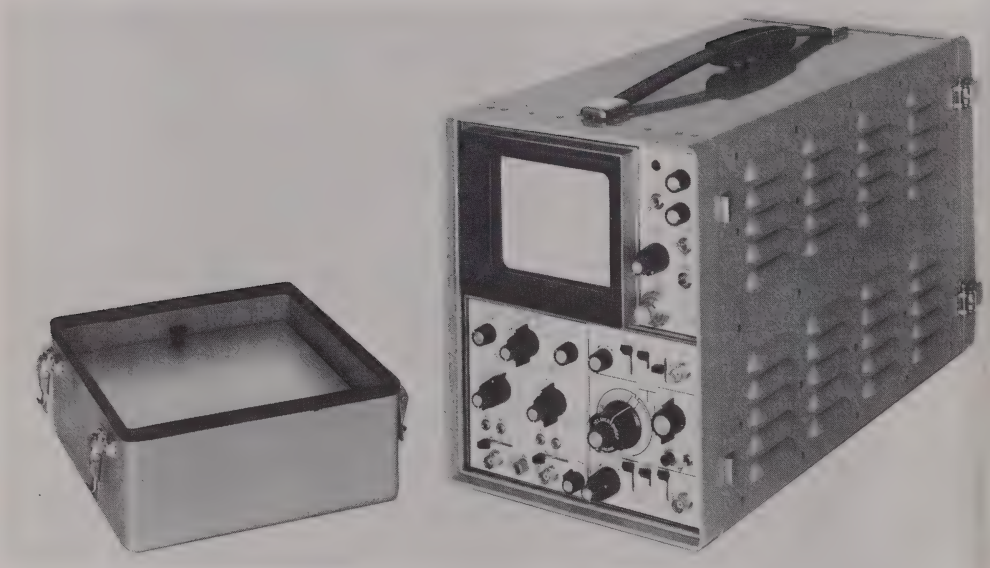

Figure 1-1. AN/USM-281D and AN/USM-281E Oscilloscope

CHAPTER 1

GENERAL INFORMATION

1-1. INTRODUCTION.

1-2. This manual contains operation and service instructions with parts list for the AN/USM-281D and AN/USM-281E Oscilloscope. This technical manual is in effect upon receipt. Extracts from this publication may be made to facilitate the preparation of other Department of Defense publications.

1-3. EQUIPMENT DESCRIPTION.

1-4. The AN/USM-281D and AN/USM-281E Oscilloscope (figure 1-1) are portable, high frequency oscilloscopes capable of accurately displaying and measuring simple and complex waveforms from dc to 50 mHz. The AN/USM-281E measuring capability can be increased to 100 mHz by using the Model 1902 Time Base Plug-In Unit. The AN/USM-281D is not to be used with the Model 1902 Plug-in without modification. The oscilloscope uses all solid-state circuitry except the cathode-ray tube (CRT) including field-effect transistor (FET) input amplifiers. The oscilloscope is convection cooled and will operate within specifications at ambient temperatures from -28° to +65°C (-18.4° to +149°F). Details of the AN/USM-281E are contained in Appendix A.

1-5. Major assemblies comprising the oscilloscope are shown in figure 1-2 which shows main assembly, plug-in units and cover supplied with the oscilloscope.

1-6. The AN/USM-281D Oscilloscope consists of an OS-246(P)/U Oscilloscope, an AM-6566/U Dual Trace Oscilloscope Plug-in Unit, a TD-1086/U Time Base-Delay Oscilloscope Plug-in Unit and Oscilloscope Cover. The AN/USM-281E Oscilloscope consists of an OS-246A(P)/U Oscilloscope, an AM-6566A/U Dual Trace Oscilloscope Plug-in Unit, a Model 1902 Time Base Delay Oscilloscope Plug-in Unit and an Oscilloscope Cover.

1-7. OS-246(P)/U and OS-246A(P)/U OSCILLOSCOPE. The OS-246(P)/U and OS-246A(P)/U Oscilloscope (Main Frame) contains the CRT, the low voltage and the high voltage power supplies, a calibrator supply, vertical output amplifier, horizontal output amplifier, and the Z axis amplifier. The CRT has an internal 8 x 10 centimeter graticule to eliminate parallax problems. The calibrator supply generates a 1 kHz square wave, and provides an output at 300 millivolts and 1 volt to front panel connectors for calibrating the vertical and horizontal amplifiers and probe calibration.

1-8. AM-6566/U and AM-6566A/U DUAL TRACE OSCILLOSCOPE PLUG-IN UNIT. (Vertical unit.) The vertical channels with 50 mHz bandwidth capability can be viewed individually or together in an alternate or chopped mode as well as an added mode. Trigger selection allows triggering from CH1 only, CH2 only, or display.

1-9. TD-1086/U and MODEL 1902 TIME BASE-DELAY OSCILLOSCOPE PLUG-IN UNIT. (Horizontal unit.) The horizontal unit has a main and a delayed sweep and a X10 horizontal expansion providing 10 nanosecond per centimeter sweep time. Capability for external intensity modulation is provided through a rear panel connector.

1-10. OSCILLOSCOPE COVER. The Oscilloscope cover is a combination type case. It consists of a front storage cover for accessories, a wrap around drip proof case and a rear cover for power cable storage.

1-11. REFERENCE DATA. Table 1-1 lists major sections of the oscilloscope with related characteristics, capabilities, limitations and environmental conditions.

1-12. EQUIPMENT SUPPLIED. Table 1-2 lists equipment, accessories and documents supplied.

1-13. EQUIPMENT REQUIRED BUT NOT SUPPLIED. Table 1-3 lists equipment required but not supplied, with both recommended and alternate nomenclature, test parameters and application.

1-14. FIELD OR FACTORY CHANGES. All factory or field changes are indicated in Table 1-4.

Figure 1-2. Major Assemblies, AN/USM-281D and AN/USM-281E Oscilloscope

Table 1-1. Reference Data

DESCRIPTION	CHARACTERISTICS	CAPABILITIES AND LIMITATIONS
AN/USM-281D OSCILLOSCOPE comprised of:		
OS-246(P)/U OSCILLOSCOPE (Main Frame A1) Includes:		
a. Calibrator	Waveshape: Square Wave	Duty Cycle 50% ±5%
	Polarity: Positive-going with baseline at zero volts	
	Output Voltage: 1 V or 0.3 V peak-to-peak	±1%
	Repetition Rate: 1kHz	±20%
	Rise Time: Less than 1 μs	
b. Power Supply	Voltage Requirements:	Operates on either 115 vac or 230 vac. Provides up to 105% of load requirements. Plug-in units may be removed with power on without damaging equipment.
	115 volt range, 103.5 to 126.5 volts;	
	230 volt range, 207 to 253 volts	
	Line Frequency: 47.5 Hz to 440 Hz	
	Power Consumption: 75 watts, max.	
c. Cathode Ray Tube	Phosphor: P31 aluminized, flat face	
	Accelerating Potential: 12 kV	
	Graticule Type: Internal	
	Area: 8 cm vertical, 10 cm horizontal, with filter	

Table 1-1. Reference Data (Cont)

DESCRIPTION	CHARACTERISTICS	CAPABILITIES AND LIMITATIONS
d. Z Axis Amplifier	Sensitivity: 2 volts peak-to-peak	
	Rise Time: 70 nanoseconds	
	Input Resistance: 5 K ohms, approx.	
	Input Coupling: DC	
	Polarity: Plus (+)	Input decreases intensity
	Maximum Input Voltage: 20 volts combined	DC plus peak AC
e. External Horizontal Amplifier	Deflection Factor:	
	Unmagnified-X1 Horizontal Gain	Variable 120 mv/cm to 1.2 v/cm
	X10 Horizontal Gain	Variable 12 mv/cm to 120 mv/cm
	÷10 External Horizontal	Variable 1.2 v/cm to 12 v/cm
	Frequency Response: DC to 4 mHz	Not more than 30% down, trigger coupling in DC position
	Input: Approximately 1 megohm, paralleled by 30 pF	
f. Mechanical Data	Dimensions, overall	Width 9-1/2 in.
		Height 12 in.
		Depth 24-1/2 in.
	Weight	43 pounds - complete
	Temperature, Operating	-28°C to +65°C
	Non-operating	-62°C to +75°C

Table 1-1. Reference Data (Cont)

DESCRIPTION	CHARACTERISTICS	CAPABILITIES AND LIMITATIONS
AM-6566/U DUAL TRACE OSCILLOSCOPE PLUG-IN UNIT (Vertical Plug-in Unit, A2)	Deflection,	
	Factor	5 mv/div to 10 v/div in 11 calibrated steps for each channel
	Accuracy	Within ±2% of indicated deflection with variable control fully clockwise
	Variable Factor	Uncalibrated deflection factor at least 2.5 times the volts/division switch indication, providing 25 volts/division in 10 volts position.
	Frequency Response	5 mv to 10V/DIV-DC to 50 mHz
	Added	5 mv to 10V/DIV-DC to 50 mHz
	Input	1 megohm ±2% paralleled by 24 pF ±1 pF
	Maximum Input Voltage	
	AC coupled	400 volts (DC plus peak AC)
	DC coupled	400 volts (DC plus peak AC)
	Input Coupling	AC or DC
	AC Low Frequency Response	30% down at 2 Hz (AC-GND-DC switch set to AC)
	Vertical Display Modes:	Channel 1 only
		Channel 2 only
		Dual Trace, alternate between channels
		Dual Trace, chopped between channels
		Added Algebraically

Table 1-1. Reference Data (Cont)

DESCRIPTION	CHARACTERISTICS	CAPABILITIES AND LIMITATIONS
	Chopped Repetition Rate	500 kHz, approximately
	Common Mode Rejection Ratio	Greater than 20:1 at 25 MHz, input signal less than ten times volts/div.
	Position Range	Approximately three screen diameters
	Polarity Inversion	Channel 1 or channel 2 signal can be inverted
	Vertical Drift	Not more than 1 cm per hour on any range
	Mode:	
	- Channel 1 only	Internal triggering from ch. 1 only
	- Channel 2 only	Internal triggering from ch. 2 only
	- Display	Trigger picked off channel being displayed
TD-1086/U TIME BASE-DELAY OSCILLOSCOPE PLUG-IN UNIT (Horizontal Plug-In Unit, A3)	Triggering:	
	Source:	
	- Internal as determined by TRIG MODE switch	Trigger Level Range ±3 volts minimum ±30 volts minimum
	- External	
	- External divide by ten	
	- Internal from ac line	
	Coupling:	
	- AC	
	- AC low frequency reject	
	- AC high frequency reject	
	- DC	
	Slope:	Sweep can be triggered from positive-going or negative-going portion of trigger signal

Table 1-1. Reference Data (Cont)

DESCRIPTION	CHARACTERISTICS	CAPABILITIES AND LIMITATIONS
	Internal Trigger Sensitivity:	
	AC	0. 5 div of deflection, minimum, 50 Hz to 50 mHz
	LF REJECT	0. 5 div of deflection, minimum, 5 kHz to 50 mHz
	HF REJECT	0. 5 div of deflection, minimum, 50 Hz to 50 kHz
	DC	0. 5 div of deflection, minimum, DC to 50 mHz
	External Trigger Sensitivity:	
	AC	50 millivolts, peak-to-peak, minimum, 50 Hz to 50 mHz
	LF REJECT	50 millivolts, peak-to-peak, minimum, 5 kHz to 50 mHz
	HF REJECT	50 millivolts, peak-to-peak, minimum, 50 Hz to 50 kHz
	DC	50 millivolts, peak-to-peak, minimum, DC to 50 mHz

Table 1-2. Equipment, Accessories and Documents Supplied

QTY	NOMENCLATURE		OVERALL DIMENSIONS (IN.)			WEIGHT (LB)	VOLUME (CU. FT.)
	NAME	DESIGNATION	HEIGHT	WIDTH	DEPTH		
1	Oscilloscope	OS-246(P)/U	11 **17	9 **15	24-1/2 **32-1/2	31-3/4 **66	2 **5
1	Dual Trace Oscilloscope Plug-In Unit	AM-6566/U	4-13/16 **6	4-1/4 **5	13-1/4 **15	4 **10	0.2 **0.4
1	Time Base-Delay Oscilloscope Plug-In Unit	TD-1086/U	4-13/16 **6	4-1/4 **5	14 **15	3-3/4 **10	0.2 **0.4
1	Oscilloscope Cover		10-1/2 **12	8-1/4 **11	3-1/2 **5	3-3/4 **8	0.3 **0.5
1	Mesh Contrast Filter		3-5/8	4-9/16			
2*	Test Cable						
2*	Test Probe						
2*	Adapter (BNC male to UHF female)	UG-255/U					
2*	Adapter (BNC female to UHF male)	UG-273/U					
2*	Adapter (BNC to binding post)	UG-1035/U					
2*	Connector (BNC to TEE)	UG-274C/U					
2	Technical Manual for AN/USM-281D Oscilloscope	NAVELEX 0969-162-5010	10-3/4	8-1/4	2		
1*	Operating Instruction Sheet		10	8			

* Stored in Oscilloscope Cover
** Crated

Table 1-3. Equipment and Publications Required But Not Supplied

CATEGORY	RECOMMENDED	ALTERNATE	EQUIPMENT TEST PARAMETERS	APPLICATION
Voltmeter	Digital Voltmeter hp 3440A, 3441A Instruction Book for Digital Voltmeter	-hp-3439A -hp-3450A	50mV - 135V 0.2% Accuracy	Troubleshooting Corrective Maintenance
Oscilloscope	Oscilloscope AN/USM-281 Instruction Book for Oscilloscope	Dumont 1950	50mHz Bandwidth 5mV/cm Sensitivity	Troubleshooting Corrective Maintenance
DC Voltmeter	DC Voltmeter ME 243/FQM Instruction Book for DC Voltmeter	AN/USM-123 Sensitive Research DCH-1	1150volts ±2%	Troubleshooting Corrective Maintenance
DC Voltmeter	DC Voltmeter AN/USM-183 Instruction Book for DC Voltmeter	-hp-412A 412AR 427A	3volts DC ±3% of FS	Troubleshooting Corrective Maintenance
Signal Generator	0-1025/U Instruction Book for Signal Generator	AN/URM-127 -hp-651A -hp-3310A -hp-200CD	1kHz - 100kHz 0-10volts	Troubleshooting Corrective Maintenance Scheduled Maintenance

Table 1-3. Equipment and Publications Required But Not Supplied (Cont)

CATEGORY	RECOMMENDED	ALTERNATE	EQUIPMENT TEST PARAMETERS	APPLICATION
Termination	50ohm Feedthru Termination -hp-10100A	TEK 017-0083	50 ohm Thruline Termination DC - 1gHz VSWR < 1.1	Corrective Maintenance Scheduled Maintenance
Generator	Pulse Generator -hp-8000A Instruction Book for Pulse Generator	EH125A -hp-8008A	50mV Pulse Risetime < 1nSec.	Corrective Maintenance Scheduled Maintenance
Meter	L-C Meter Tek 130 Instruction Book for L-C Meter	AN/URM-90 -hp-4332A -hp-4260A	24 ± 1pf	Corrective Maintenance
Generator	Square Wave Generator -hp-211B Instruction Book for Square Wave Generator	-hp-222A -hp-211A Dumont 791	10kHz - 1mHz 30mV - 5V 50ohms	Corrective Maintenance
Pad	Attenuator Pad 10db GR874	-hp-8491A Tek 011-0085-00	10db ± 0.5db DC-1GHz, 50ohm impedance	Corrective Maintenance Scheduled Maintenance
Generator	Time Mark Generator Tek 180A Instruction Book for Time Mark Generator	AN/USM-108 Tek 2901 Tek 184 Dumont 781	Time Markers 1Sec - 1mSec, Sine Wave Outputs 5, 10, 50mHz. 0.03% Accuracy	Corrective Maintenance Scheduled Maintenance

Table 1-3. Equipment and Publications Required But Not Supplied (Cont)

CATEGORY	RECOMMENDED	ALTERNATE	EQUIPMENT TEST PARAMETERS	APPLICATION
Voltmeter	RF Voltmeter BEC 91DA W/91-14A Instruction Book for RF Voltmeter	AN/URM-155 -hp-411A	50kHz - 50mHz at ±3% FS Accuracy	Scheduled Maintenance
Generator	Constant Amplitude Signal Generator Tek 191 Instruction Book for Constant Amplitude Signal Generator	SG-582/U -hp-606A -hp-606B	50kHz - 50mHz Leveled Output at 50ohm and 100mV p-p	Scheduled Maintenance
Calibrator	Voltmeter Calibrator -hp-738BR Instruction Book for Voltmeter Calibrator	-hp-738AR Ballantine 421A	30mV to 10V p-p at 0.2% Accuracy	Scheduled Maintenance
Cable	BNC Male Test Cable <4" long			Scheduled Maintenance

Table 1-4. Field and Factory Changes

CHANGE NO.	NOMENCLATURE	DESCRIPTION
1	AN/USM-281D Oscilloscope Change effective with serial number A150 through A676	Substitution of a 500W VDC, .02 ufd, +80% -20% tol., Z5V, ceramic disc capacitor for the 150W VDC, .02 uf, +60% -50% tol., Z5V, ceramic disc capacitor originally used.
2	This modification applies to the Time Base-Delay Oscilloscope Plug-in Unit TD-1086/U(designated A3) in the AN/USM-281D Technical Manual. Change effective with serial number A1 through A676.	This modification is to provide an External Trigger Level range of ±30 volts minimum. The units supplied have a range of ±15 volts minimum. Replace the following 1/4 W, 5%, carbon composition resistors with the following parts: REF. DES. — NEW VALUE A3A2R18 — 5.1K A3A2R92 — 620 ohms A3A5R23 — 1.1K

CHAPTER 2

OPERATION

2-1. INTRODUCTION.

2-2. This chapter contains information necessary for the operation of the AN/USM-281D Oscilloscope and a description of the operating controls, indicators and connectors, and operating procedures.

2-3. CONTROLS, INDICATORS AND CONNECTORS.

2-4. Table 2-1 lists panel designations, description and operating functions of front panel controls. Table 2-2 lists panel designations, descriptions and operating functions of rear panel controls. Figure 2-1 shows location of front panel controls, figure 2-2, location of rear panel controls.

2-5. OPERATING PROCEDURES.

2-6. Operating procedures for the AN/USM-281D Oscilloscope consist of AM-6566/U Dual Trace Oscilloscope Plug-in Unit operating procedures and TD-1086/U Time Base-Delay Oscilloscope Plug-in Unit operating procedures. Procedures described in the following paragraphs include normal sweep single channel operation, normal sweep dual channel operation, single or dual channel delayed sweep operation, and single sweep operation.

2-7. OPERATOR TURN-ON PROCEDURES.

2-8. Perform the turn-on procedures when the AN/USM-281D Oscilloscope is turned on for the first time. After the oscilloscope has been in use, it is not necessary to repeat the initial control settings each time the oscilloscope is turned on. Table 2-3 lists turn-on procedures for the oscilloscope.

2-9. NORMAL SWEEP SINGLE CHANNEL OPERATING PROCEDURES.

2-10. The single channel mode of operation allows the operator to observe and accurately measure the voltage level and time duration of a single waveform displayed on the CRT. When using the oscilloscope to measure voltage, the vernier portion of the VOLTS/DIV control must be set to CAL. The voltage is then determined by multiplying the number of centimeters of deflection by the setting of the appropriate VOLTS/DIV control and probe factor. Table 2-4 gives the procedure for setting the controls for single channel operation.

2-11. NORMAL SWEEP DUAL CHANNEL OPERATING PROCEDURE.

2-12. The dual channel mode of operation allows the operator to observe and accurately measure the voltage level of two separate waveforms displayed on two separate traces. The dual trace feature also allows accurate time comparison of two separate waveforms. When using the oscilloscope to measure voltages, the vernier portion of the VOLTS/DIV control must be set to CAL. The voltage is then determined by multiplying the number of centimeters of deflection by the setting of the appropriate VOLTS/DIV control. Table 2-5 gives the procedure for setting the controls for dual channel operation.

2-13. XY MODE OPERATING PROCEDURES.

2-14. The XY mode of operation allows monitoring of the phase relationship between one (1) horizontal channel (x) and one (1) vertical channel (y). Set controls as indicated in Table 2-6 and proceed as follows:

a. Connect the internal calibrator (300 mv) to the horizontal input (CH2 INPUT BNC connector).

b. To calibrate, set the controls listed below as follows:

HORIZ X10 GAIN	push-in
CH2 VOLTS/DIV	.1
CH2 Vernier	CAL

c. Use the BEAM FINDER and POSITION controls to locate and center the display. (The display will be two dots) - adjust the INTENSITY and FOCUS controls for optimum display.

d. Using the MAIN TRIG LEVEL-HOR GAIN control, set the distance between the two

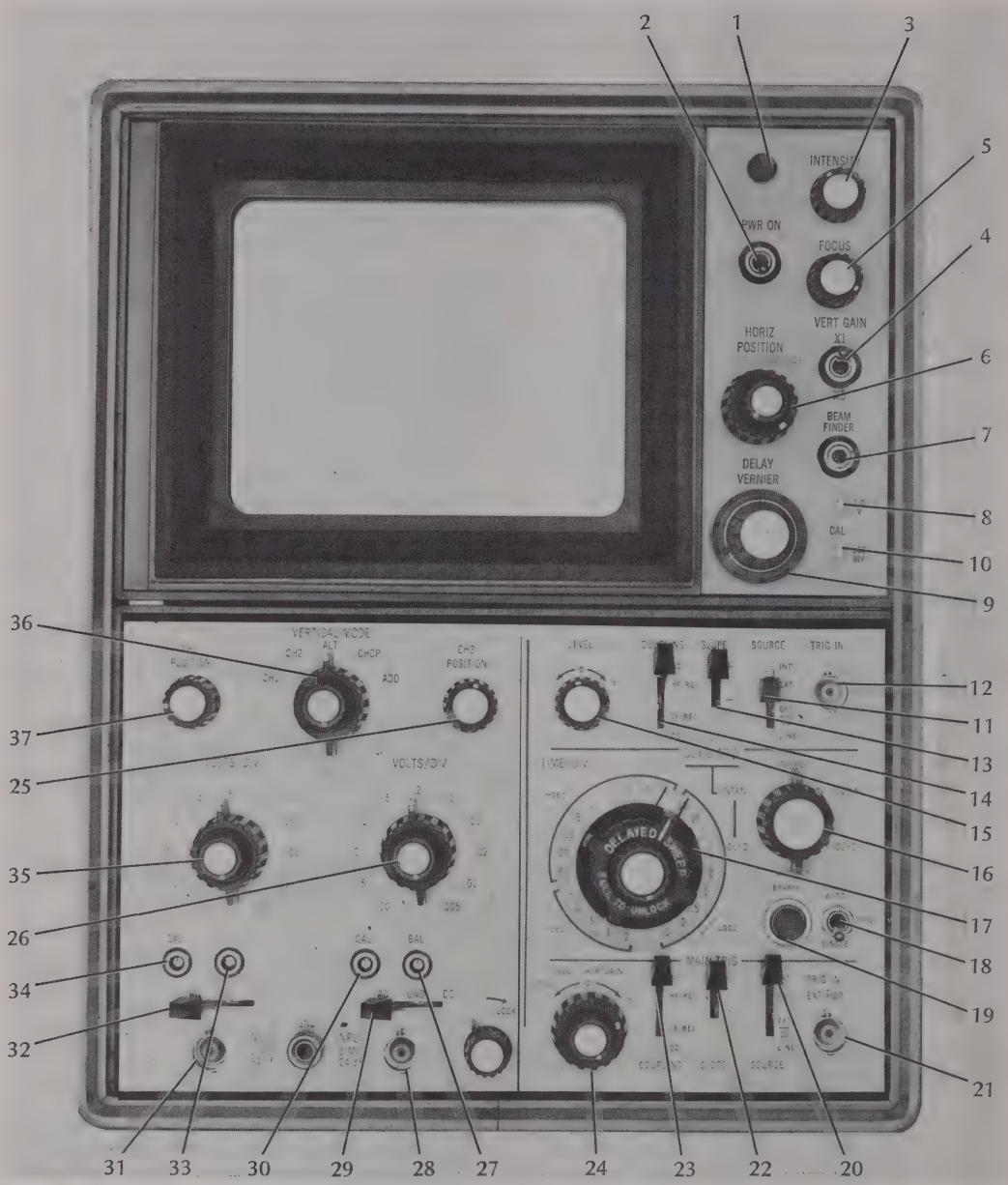

Figure 2-1. Front Panel Controls

dots to 3 divisions. The horizontal sensitivity is now set at . 1 volts/division.

NOTE

For identical input XY operation the horizontal sensitivity is controlled by the CH2 VOLTS/DIV switch.

2-15. X-YY MODE OPERATING PROCEDURES.

2-16. The X-YY mode of operation allows simultaneous monitoring of the phase relationship between one (1) horizontal channel (x) and two (2) vertical channels (y) or a differential (y) input in the ADD Mode only. Set controls as indicated in Table 2-7 and proceed as follows:

a. Connect the internal calibrator (300 mv) to the horizontal input (MAIN TRIG IN EXT HOR) BNC connector.

b. To calibrate, set the controls listed below as follows:

HORIZ X10 GAIN	pull out
MAIN TRIG SOURCE	EXT
MAIN TRIG COUPLING	DC

c. Use the BEAM FINDER and POSITION controls to locate and center the display. The display will be two dots - adjust the intensity and FOCUS controls for optimum display.

d. Using the MAIN TRIG LEVEL-HOR GAIN control, set the distance between the two dots to 3 divisions. The horizontal sensitivity is now set at . 1 volts/division.

NOTE

For X-YY operation the horizontal sensitivity is controlled by the HORIZ GAIN and the MAIN TRIG SOURCE switch enabling sensitivity of: .1V, 1V, and 10V/division. Calibration of other sensitivities may be achieved through the use of an external calibrator.

2-17. OPERATOR'S MAINTENANCE.

2-18. Operator's maintenance of the AN/USM-281D Oscilloscope is limited to fuse replacement and periodic cleaning of the exterior surfaces of the instrument. Detailed checkout and trouble shooting require external test equipment and usually require internal adjustment if a component is replaced. Therefore, these procedures are covered in chapters 4 and 6 and should be performed only by a qualified technician. The following paragraphs further identify and explain operator's maintenance.

2-19. OPERATING CHECKS AND ADJUSTMENTS. Checkout and adjustment of the oscilloscope requires the use of accurate external test equipment and is not normally performed by the operator. Chapter 6 gives a detailed reference standards procedure for the oscilloscope and the periodic internal adjustments required to maintain the accuracy of the oscilloscope. Operator's adjustment is limited to the front-panel adjustments provided in Table 2-3. These adjustments should be performed periodically to insure the accuracy of the instrument and should be checked before making a voltage measurement when a high degree of accuracy is required.

2-20. PREVENTIVE MAINTENANCE. Preventive maintenance for the oscilloscope consists of periodically cleaning the exterior surfaces of the oscilloscope with a soft cloth or dry compressed air (not to exceed 10 psig) and checking controls for security of attachments. The oscilloscope is convection cooled and therefore requires that the external surfaces be kept free from dirt and grease to allow proper heat dissipation.

2-21. EMERGENCY MAINTENANCE. Emergency maintenance is limited to replacing fuses. Figure 2-2 locates and identifies the fuse used in the oscilloscope.

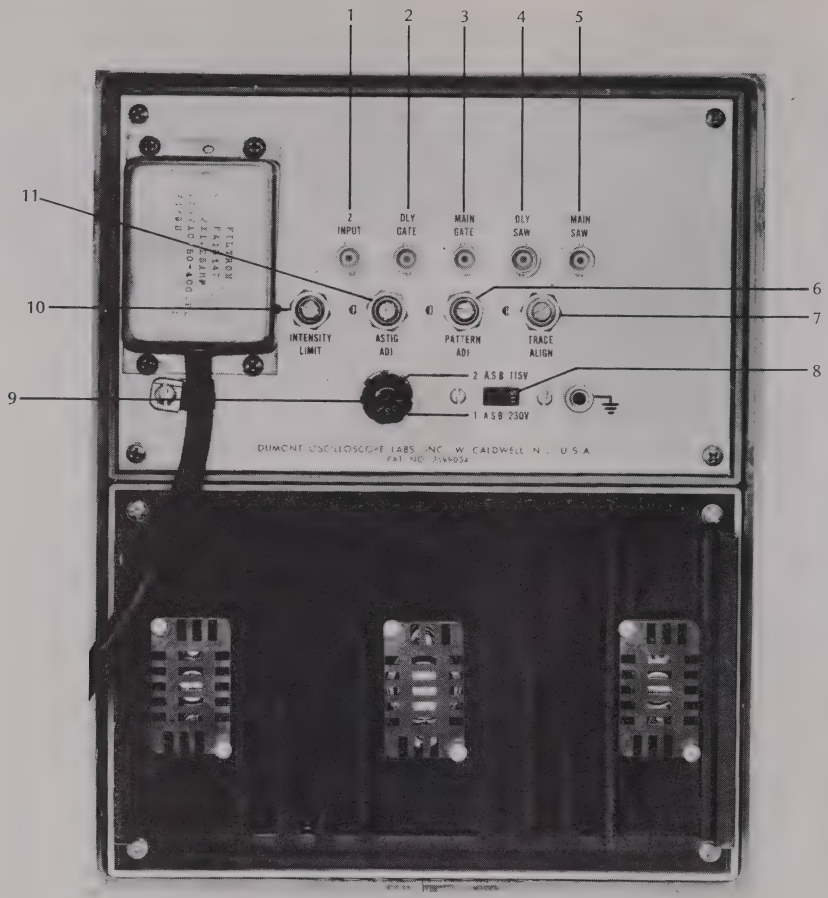

Figure 2-2. Rear Panel Controls

1. Z INPUT Connector
2. DLY GATE Connector
3. MAIN GATE Connector
4. DLY SAW Connector
5. MAIN SAW Connector
6. PATTERN ADJUSTMENT Control
7. TRACE ALIGN Control
8. 115V - 230V Switch
9. FUSE 2A SB, 1A SB
10. INTENSITY LIMIT Control
11. ASTIG ADJUSTMENT Control

Table 2-1. Controls, Indicators and Connectors, Front Panel

FIG. NO. / INDEX NO.	PANEL DESIGNATION	DESCRIPTION	FUNCTION
2-1, 1	Power on lamp	Lamp A1A1A6LT1	Indicates power on.
2-1, 2	PWR ON	Switch A1A1A6S1	Applies AC power to oscilloscope.
2-1, 3	INTENSITY	Variable resistor A1A1A6R4	Provides continuous intensity control of trace.
2-1, 4	VERT GAIN X1 X5	Switch A1A1A6S3	Determines gain of vertical amplifier. X1: Normal, X5 Expands trace 5 times.
2-1, 5	FOCUS	Variable resistor A1A1A6R1	Focuses trace.
2-1, 6	HORIZ POSITION - X10 VERNIER	Variable resistor A1A1A6R5, switch A1A1A6S3	Provides trace horizontal position coarse control. Provides 10 times gain in horizontal gain plus vernier control.
2-1, 7	BEAM FINDER	Switch A1A1A6S2	Overrides intensity, vertical and horizontal position, restricts beam position within graticule.
2-1, 8	CAL 1V	Jack A1A1A6J1	Provides calibrator 1 kHz square wave, 1v, peak-to-peak.
2-1, 9	DELAY VERNIER	Variable resistor A1A1A6R3	Establishes time when delay sweep starts, time when delayed sweep is armed for triggering.
2-1, 10	CAL 300 MV	Jack A1A1A6J2	Provides calibrator 1 kHz square wave, 300 mv, peak-to-peak.
2-1, 11	SOURCE	Switch A3A6A1S1A	Selects delayed sweep trigger source.
	INT		Uses internal signals from vertical preamplifier for triggering.
	EXT		Uses signals from external source.
	$\frac{\text{EXT}}{10}$		Divides external signals by 10.
	LINE		Uses power line for triggering.
2-1, 12	TRIG IN	Connector A3A6J1	Input for external trigger for delayed sweep.
2-1, 13	SLOPE + -	Switch A3A6A1S1B	Selects + or - slope on which delay sweep triggers.

Table 2-1. Controls, Indicators and Connectors, Front Panel (Cont)

FIG. NO. INDEX NO.	PANEL DESIGNATION	DESCRIPTION	FUNCTION
2-1, 14	COUPLING	Four position switch A3A6A1S1C	Determines coupling mode to delay trigger input circuits.
2-1, 15	LEVEL	Variable resistor A3A6R1	Selects level at which delayed triggering occurs.
2-1, 16	Horizontal mode control	Eleven wafer switch A3A6S3	Selects horizontal section mode.
	NORM		Allows only main sweep to function.
	INTEN		Allows intensified area for main sweep, the start controlled by DELAY VERNIER and duration by DLY'D SWEEP control. Delayed sweep triggering automatic.
	DLY'D		Entire horizontal trace is intensified area described above.
	EXT HOR		Disables trigger and sweep functions, sets up horizontal amplifer for external signals.
	TRIG INTEN		Delayed sweep triggered by delayed trigger controls. Delay vernier arms delayed sweep.
	TRIG DLY'D		Horizontal trace is intensified area described above.
2-1, 17	TIME/DIV	Time switch assembly A3A1S1	Indicates horizontal calibration in time/div of main sweep with vernier in CAL position (with X10 off). Main sweep in usec, msec, sec. Indicates horizontal calibration in time/div of delayed sweep with vernier in CAL position. Vernier provides continuous adjustment of TIME/DIV.

Table 2-1. Controls, Indicators and Connectors, Front Panel (Cont)

FIG. NO. / INDEX NO.	PANEL DESIGNATION	DESCRIPTION	FUNCTION
2-1, 18	SWEEP MODE		
	AUTO	Switch A3A6S1, three-position toggle	Provides three sweep modes. AUTO allows main sweep to free run in the absence of triggered signals or be triggered from an input repetition rate over 20 Hz.
	TRIG		TRIG allows sweep to be triggered only if signal is present.
	SINGLE		SINGLE allows only one triggered sweep to occur.
2-1, 19	REARM	Switch and Indicator lamp A3A6S2	Indicates condition of main sweep. When lit indicates main sweep ready for triggering.
2-1, 20	SOURCE	Four position switch A3A6A2S1A	Selects main trigger source
	INT		Internal signal from vertical pre-amplifier.
	EXT		For external trigger signal.
	EXT:10 LINE		Divides external signal input by 10. Uses power line for triggering.
2-1, 21	TRIG IN EXT HOR	Connector A3A6A2J2	External signal input for triggering or for horizontal deflection.
2-1, 22	SLOPE + -	Two position switch A3A6A2S1B	Selects + or - slope on which main sweep triggers.
2-1, 23	COUPLING	Four position switch A3A6A2S1C	Determines coupling mode to main trigger input circuits.
2-1, 24	LEVEL-HOR GAIN	Variable resistor A3A6R2	Controls trigger level of main sweep trigger, or provides continuous control of horizontal amplifier gain.
	STAB	Variable resistor A3A6R1	Provides vernier adjustment of hold-off time to improve high frequency synchronization.
2-1, 25	CH2 POSITION	Variable resistor A2A5R2	Adjusts vertical position of channel 2 trace.

Table 2-1. Controls, Indicators and Connectors, Front Panel (Cont)

FIG. NO. / INDEX NO.	PANEL DESIGNATION	DESCRIPTION	FUNCTION
2-1, 26	VOLTS/DIV	Rotary switch A2A7A1S1	Sets channel 2 sensitivity, vernier provides continuous gain of channel 2. When pulled, inverts channel 2 signal.
2-1, 27	BAL	Variable resistor A2A8A2R1	Adjusts channel 2 DC balance.
2-1, 28	INPUT	BNC connector A2A5J2	Input connector for channel 2.
2-1, 29	AC GND DC	Three position switch A2A5S1	Selects input coupling mode to channel 2.
2-1,30	CAL	Variable resistor A2A7A2R11	Adjusts channel 2 gain.
2-1, 31	INPUT	BNC connector A2A5J1	Input connector for channel 1.
2-1, 32	AC GND DC	Three position switch A2A5S2	Selects input coupling mode to channel 1.
2-1, 33	BAL	Variable resistor A2A7A2R1	Adjusts channel 1 DC balance.
2-1, 34	CAL	Variable resistor A2A8A2R11	Adjusts channel 1 gain.
2-1, 35	VOLTS/DIV	Rotary switch A2A8A1S1	Sets channel 1 sensitivity, vernier provides continuous gain of channel 1. When pulled, inverts channel 1 signal.
2-1, 36	VERTICAL MODE	Five position switch A2S1	Selects display of CH1, CH2, ALT, CHOPPED, or ADDED.
	TRIG MODE	Three position switch A2S1	Selects triggering from CH1 ONLY, CH2 ONLY, or from both CH1 and CH2 in display mode.
2-1,37	CH1 POSITION	Variable resistor A2A5R1	Adjusts vertical position of channel 1 trace.

Table 2-2. Controls and Connectors, Rear Panel

FIG. NO. / INDEX NO.	PANEL DESIGNATION	DESCRIPTION	FUNCTION
2-2, 1	Z INPUT	BNC connector A1A1A1J1	For externally controlling trace intensity.
2-2, 2	DLY GATE	BNC connector A1A1A1J2	Gate from delay sweep generator.
2-2, 3	MAIN GATE	BNC connector A1A1A1J3	Gate from main sweep generator.
2-2, 4	DLY SAW	BNC connector A1A1A1J4	Delay sweep generator ramp.
2-2, 5	MAIN SAW	BNC connector A1A1A1J5	Main sweep generator ramp.
2-2, 6	PATTERN ADJ.	Variable resistor A1A1A1R2	Adjusts CRT pattern to be rectangular.
2-2, 7	TRACE ALIGN	Variable resistor A1A1A1R4	Aligns CRT trace to the graticule.
2-2, 8	115V - 230V	Switch A1A1A1S1	Selects line voltage.
2-2, 9	FUSE 2A SB, 1A SB	Fuse A1A1A1F1	AC Input line fuse.
2-2, 10	INTENSITY LIMIT	Variable resistor A1A1A6R3	Adjusts maximum trace intensity.
2-2, 11	ASTIG ADJ	Variable resistor A1A1A1R1	Adjusts astigmatism of CRT spot.

Table 2-3. Turn-on Procedures

STEP	PROCEDURE
	NOTE Perform steps 1 through 14 before energizing the oscilloscope for the first time. Once the oscilloscope has been in use it should not be necessary to repeat these steps unless the controls have been completely misadjusted.
	INITIAL CONTROL SETTINGS
	Position oscilloscope assembly controls as follows:
1.	Set PWR ON switch to off.
2.	Set INTENSITY control to center of rotation.
3.	Set FOCUS contrcl to center of rotation.
4.	Set HORIZ POSITION to center of rotation.
	Position time base and delay generator controls as follows:
5.	Set AUTO-TRIG-SINGLE switch to AUTO.
6.	Set MAIN TRIG-SOURCE switch to INT.
7.	Set MAIN TRIG-SLOPE switch to +.
8.	Set MAIN TRIG-COUPLING switch to AC.
9.	Set HORIZONTAL MODE switch to NORM
10.	Position TIME/DIV control to CAL.
11.	Repeat steps 6, 7 and 8 for DLY'D TRIG.
	Position dual channel vertical amplifier controls as follows:
12.	Set VERTICAL MODE switch to CH1.
13.	Set TRIG MODE (p/o VERTICAL MODE control) to DSPLY.
14.	Set vernier portion of VOLTS/DIV switches to CAL.
	TURN-ON
	CAUTION Before connecting any signals to the oscilloscope observe limitations of 400 volts peak for CH1, CH2, TRIG IN EXT HOR, and TRIG IN connectors on front panel, and 20 volts peak on Z INPUT connector on rear panel. Ensure that VOLTS AC switch on rear panel is set to proper input voltage.

Table 2-3. Turn-on Procedures (Cont)

STEP	PROCEDURE
	NOTE Operating modes described in following paragraphs all use internal triggering. Other triggering modes may be used by connecting trigger source to either TRIG IN connectors depending upon whether main or delayed sweep is to be triggered.
15.	Connect oscilloscope power cord to power source.
16.	Set PWR ON switch on. Power indicator will light. Trace should appear on CRT in approximately 15 seconds. NOTE If trace does not appear after waiting sufficient time for warm-up, press BEAM FINDER pushbutton and adjust positioning controls to center trace with BEAM FINDER depressed. If trace disappears when BEAM FINDER is released, increase INTENSITY until trace reappears.
17.	When trace appears, adjust INTENSITY for desired brightness, and HORIZ POSITION and CH1 POSITION controls to center trace.
18.	Adjust FOCUS for sharpest display.

Table 2-4. Single Channel Operating Procedure

STEP	PROCEDURE
1.	Perform turn-on procedure (See table 2-3).
2.	Connect signal to CH1 input connector.
	NOTE
	Settings in steps 3 through 6 should be made to give the desired display.
3.	Set AC-GND-DC to AC or DC as desired.
4.	Set VOLTS/DIV as desired.
5.	Set CH1 POSITION as desired.
6.	Set LEVEL control as desired.
7.	Set AUTO TRIG SINGLE switch to AUTO.
8.	Set MAIN TRIG-SOURCE switch to INT.
9.	Set MAIN TRIG-SLOPE switch to +.
10.	Set MAIN TRIG-COUPLING switch to AC.
11.	Set HORIZ MODE switch to NORM
12.	Position TIME/DIV control to CAL.
13.	Set TRIG MODE (p/o VERTICAL MODE control) to DSPLY.
14.	Set vernier portion of VOLTS/DIV control to CAL.
15.	Set VERTICAL MODE TO CH1.
	Set VERT GAIN X1/X5 to X1.
	NOTE
	To use CH2, connect signal to CH2 input connector and repeat steps 3 through 6 and set VERTICAL MODE control to CH2.
	When using X5 gain in the operation of either channel, it may be necessary to readjust CAL (30) or CAL (34) using 300 MV (18). Calibrate each channel as referenced. Readjust when returning to X1.

Table 2-5. Dual Channel Operating Procedure

STEP	PROCEDURE
1.	Perform turn-on procedure (See table 2-3).
2.	Connect signals to CH1 and CH2 connectors INPUT.
	NOTE
	Settings in steps 3 through 6 should be made to give the desired display.
3.	Adjust AC-GND-DC to AC or DC as desired.
4.	Set VOLTS/DIV as desired.
5.	Set CH1 POSITION as desired.
6.	Set LEVEL control as desired.
7.	Set AUTO TRIG SINGLE switch to AUTO.
8.	Set MAIN TRIG-SOURCE switch to INT.
9.	Set MAIN TRIG-SLOPE switch to +.
10.	Set MAIN TRIG-COUPLING switch to AC.
11.	Set HORIZ MODE switch to NORM
12.	Position TIME/DIV control to CAL.
13.	Set TRIG MODE (p/o VERTICAL MODE control) to DSPLY.
14.	Set vernier portion of VOLTS/DIV control to CAL.
	NOTE
	Two methods of dual channel operation are chopped and alternate. In alternate mode (ALT), sweep alternates with each trace between CH1 and CH2 with option to trigger sweep from CH1 ONLY CH2 ONLY or from CH1 when viewing CH1, and from CH2 when viewing CH2. To obtain this mode:
15.	Set VERTICAL MODE to ALT and TRIG MODE (p/o VERTICAL MODE control) to CH1 or DSPLY as desired. In the chopped mode a 500 kHz signal switches between CH1 and CH2. In this mode it is necessary to trigger from CH1 ONLY or CH2 ONLY, and this mode is obtained as follows:
16.	Set VERTICAL MODE to CHOP and TRIG MODE (p/o VERTICAL MODE control) to CH1 or CH2. In either of the above modes, set following controls in steps 17 through 22 to give the desired display.
17.	Adjust AC-GND-DC to AC or DC as desired.
18.	Set VOLTS/DIV control to desired position.
19.	Set CH1 POSITION control to desired position.

Table 2-5. Dual Channel Operating Procedure (Cont)

	PROCEDURE
20.	Set CH2 POSITION control to desired position.
21.	Set LEVEL control to desired position.
22.	Set TIME/DIV control to desired position.

Table 2-6. XY Axis Calibration Control Settings

POWER	- ON
As required:	
INTENSITY, FOCUS, HORIZ POSITION, X10, VERT GAIN X1 X5, CH1 POSITION, VOLTS/DIV (CH1 & CH2), AC GND DC (CH1 & CH2), LEVEL-HOR GAIN, MAIN TRIG COUPLING.	
VERTICAL MODE	- CH1
TRIG MODE	- CH2
HORIZ MODE	- EXT HOR
MAIN TRIG SOURCE	- INT
INPUT (CH1)	- Signal INPUT X
INPUT (CH2)	- Signal INPUT Y

Table 2-7. X-YY Axis Calibration Control Settings

POWER	- ON
As required:	
INTENSITY, FOCUS, HORIZ POSITION, X10, VERT GAIN X1 X5, CH1 POSITION, CH2 POSITION, VOLTS/DIV, AC GND DC, LEVEL-HOR GAIN, MAIN TRIG COUPLING.	
VERTICAL MODE	- CH1, CH2, CHOP or ADD
HORIZ MODE	- EXT HOR
MAIN TRIG SOURCE	- EXT or EXT/10
CH1 or CH2 INPUT	- Y signal
TRIG in EXT HOR	- X signal

CHAPTER 3

FUNCTIONAL DESCRIPTION

3-1. INTRODUCTION.

3-2. CAPABILITIES. The AN/USM-281D Oscilloscope covers a frequency range from DC to 50 mHz with a maximum (or 1 mv in X5 mode) vertical sensitivity of 5 millivolts per centimeter. There are two vertical channels which may be displayed singly, alternately, chopped or added. The maximum horizontal sweep rate is 100 ns per centimeter and the display can be expanded (10 ns/cm) by pulling out the HORIZ POSITION VERNIER control. A delayed sweep is also available. The horizontal amplifier has a frequency response of DC to 4 mHz, and an external horizontal signal can be displayed on the CRT (X, Y operation).

3-3. EXTERNAL OUTPUTS. The oscilloscope provides four auxiliary outputs at the rear of the oscilloscope. These outputs are main gate, delayed gate, main saw and delayed saw.

3-4. VERTICAL MODES. There are two vertical channels with independent position and scale controls. The VERTICAL MODE control determines how the channels are displayed. In the CH1 or CH2 mode the selected channel is displayed. In the ALT mode, the two channels are displayed alternately on subsequent sweeps. In the CHOP mode, the two channels are displayed together, chopped at a 500 kHz rate. In the ADD mode, the two channels are added algebraically. Each channel may be inverted by pulling out its VOLTS/DIV VERNIER knob.

3-5. The TRIG MODE switch is set to select internal triggering from channel 1 only, channel 2 only, or DSPLY. In the display mode, the trigger is picked off the channel being displayed.

3-6. HORIZONTAL MODES. In the normal horizontal mode (MAIN), with the sweep mode switch set for SINGLE or TRIG, the sweep is triggered from the signal picked off channel 1 or channel 2 as described in paragraph 3-5 above if the MAIN TRIG SOURCE selector is set for an internal trigger (INT). If the MAIN TRIG SOURCE selector is set to EXT or EXT/10 the sweep is triggered from the main external TRIG IN signal. If the main SOURCE selector is set to LINE the sweep is triggered by a signal picked off the ac power input. The sweep begins immediately when the trigger source reaches the level determined by the main trigger LEVEL and SLOPE controls, and the sweep rate is determined by the TIME/DIV MAIN switch. If the sweep mode switch is set for AUTO, the sweep will be continuous.

3-7. In the intensified modes (INTEN (AUTO)), (INTEN (TRG)) the main sweep is triggered in the same manner as in para. 3-6 above but a delayed strobe gate is added to the Z axis signal to intensify the display. The timing of the strobe gate is established in the same manner as the delayed sweep described below.

3-8. In the triggered delayed mode (DLY TRIG) the start of the delayed sweep is triggered in the same manner as the main sweep, and the delay is controlled by the TIME/DIV MAIN and DELAY vernier controls. The delayed sweep starts at the first delayed trigger after the time delay has elapsed. The delayed trigger is derived from the signal selected by the switch. The sweep rate is determined by the TIME/DIV DELAY and vernier controls. The DLY AUTO mode is the same except that the sweep begins immediately after the time delay with no delayed trigger required.

3-9. In the HORIZ AMP mode the input from the TRIG IN EXT HOR jack is displayed on the X axis of the CRT. This permits X Y operation with the main TRIG LEVEL control acting as a horizontal gain control.

3-10. GENERAL FUNCTIONAL DESCRIPTION.

3-11. VERTICAL SECTION. A block diagram of the oscilloscope is shown in figure 3-1. The channel 1 and channel 2 input signals are applied to separate attenuator and buffer circuits. The attenuators divide the inputs in steps of 1, 10, 100 and 1000, and substeps of 2 and 5 controlled by the VOLTS/DIV switches. The buffer stage provides a very high input impedance. The signals are then amplified by the vertical amplifiers which include provision for inverting the inputs and calibrating the vertical

scale, plus vernier vertical scale controls. The two signals are then applied to vertical amplifiers and switch. The amplifier stage includes the vertical position controls. The switch stage determines which of the two channels is coupled to the CRT. When the gate 1 signal from the vertical mode logic is present, the channel 1 signal is displayed and when the gate 2 signal is present the channel 2 signal is displayed. The signal to be displayed is then routed through a 120 nanosecond delay line to allow time for the sweep circuits to act before the display begins. The final stage is an output amplifier which drives the vertical deflection plates.

3-12. The vertical mode logic controls the selection of signals to be displayed. In the CH1 or CH2 position of the VERTICAL MODE switch, the selected gate is always present and the selected channel is displayed continuously. In the ALT mode, an alternate sync signal is received from the main sweep ramp generator at the end of each sweep. This causes the logic to switch back and forth between gate 1 and gate 2, so the two channels are displayed on alternate sweeps. In the ADD mode, both gates are generated continuously, causing both signals to be coupled to the output amplifier and the display is the algebraic sum of the two input signals. In the CHOP mode, the gate 1 and gate 2 signals alternate at a 500 kHz rate, generating a chopped display of both channels. In this mode, a very brief blanking signal is generated each time the gates are switched to blank the CRT during the transition between channels.

3-13. The output from the vertical preamplifiers is also applied to a trigger preamplifier and switch. This circuit amplifies the signal and gates one channel to the horizontal section. In the display trigger mode the trigger gates are the same as the vertical gates. The triggering, therefore, will be from whichever channel is being displayed. When the TRIG MODE switch is set to CH1 or CH2, triggering is always from the channel selected regardless of which signal is displayed. In the chopped mode CH1 or CH2 must be selected for internal triggering.

3-14. HORIZONTAL SECTION. The signals selected by the trigger source controls (internal, external, external/10, or line) are applied to the main and/or delayed trigger input amplifiers. The input amplifier stages amplify the trigger sources and clip large signals. When the oscilloscope is used for an X Y display, the output from the main trigger input amplifier is applied directly to the horizontal output amplifier and deflects the X axis. In the trigger modes the trigger sources are applied to the comparator and pulse generator circuits. When the trigger source reaches the level determined by the trigger level and slope switches, a pulse is generated to trigger the appropriate ramp generator.

3-15. The main sweep ramp generator produces the main sweep ramp, starting when the trigger pulse is received in triggered modes, and continuously in auto modes. This circuit also generates the blanking signal to blank the CRT between sweeps.

3-16. The delayed sweep ramp generator operates in a similar manner to the main ramp generator except that the start of the sweep is delayed. The extent of the delay is determined by the time required for the main sweep ramp to reach the level set by the delay vernier control. When this delay is completed, the delayed sweep starts on the first delayed trigger input in triggered modes. The delayed sweep ramp generator also produces a strobe gate, coincident with the delayed sweep, which is used to intensify the display. Note that in delayed modes, the start and duration of the delay is determined by the main trigger and timing circuits, whereas the sweep is determined by the delayed trigger and timing circuits.

3-17. The horizontal output amplifier drives the horizontal deflection plates with the main sweep, delayed sweep or external input depending upon the mode selected.

3-18. The Z axis amplifier controls the beam brightness based on a combination of the blanking, chopped blanking, and intensify signals, by varying the CRT control grid voltage.

3-19. A free running oscillator generates a 1 volt and a 300 millivolt signal for use in calibrating the vertical scale and compensating probes.

3-20. DETAILED CIRCUIT DESCRIPTION.

3-21. VERTICAL ATTENUATORS. The vertical attenuators for both channels are identical.

Channel 1 is shown in simplified form in figure 3-2. The input signal is direct coupled or ac coupled across capacitor A2A5C1, or the input line may be grounded to establish a reference position on the CRT. Depending on the setting of the VOLTS/DIV switch, the signal is routed through a divide by 1, 10, 100 or 1000 network and then through a divide by 1, 2 or 5 network. These attenuators, in various combinations, provide a range of scale factors from . 005 volts/cm to 10 volts/cm in 11 steps. Each stage, except the unit stages, includes an input capacitance and a response adjustment which permit adjustment of the parallel and series capacitance to optimize the square wave response for all settings.

3-22. INPUT BUFFER AMPLIFIERS. The signals from the attenuators drive a pair of identical buffer amplifiers. The channel 1 buffer is shown in simplified form in figure 3-3. The attenuated input signal is coupled to field effect transistor A2A7A2Q1 through an RC network with provision for input capacitance adjustment. Signals exceeding plus or minus 15 volts are clipped by CR1 or CR2 to protect the circuit. The field effect transistor (FET) provides a very high input impedance source follower to drive the following preamplifier stage. Temperature compensation is provided by R20 and R21.

3-23. The FET is not biased to operate about the zero axis, but has a positive output with zero input. The offset is compensated by a balance signal from a matched FET. All subsequent stages operate in push-pull fashion. The balance control is set so that the balance signal matches the input signal to the vertical preamplifier, keeping the ground reference fixed when normal or inverted. This arrangement also tends to compensate for any temperature drift in the circuits.

3-24. VERTICAL PREAMPLIFIERS. The two vertical preamplifiers are identical. The channel 1 preamplifier is shown in simplified form in figure 3-4. The circuit operates in push-pull fashion. The input and balance signals are coupled through emitter follower pair Q1. If the input level is excessive, diode CR17 or CR18 conducts sufficiently to protect the circuit but not enough to bring the signal into the display range. A differential cascode amplifier is formed with Q2 and IC1 using a balun transformer T1 to ensure a differential signal at very high frequencies. The first stage gain is determined by R8 and R9, while C3 determines the high frequency peaking. The calibration adjustment A2A7R11, permits fine adjustment of the gain to calibrate the vertical scale and the vernier control A2A7R1, permits uncalibrated fine adjustment of the vertical gain over a range of 2.5 to 1. The vertical scale is calibrated with the vernier fully clockwise.

3-25. The gain of IC1 is determined by the collector load R22, R21. IC1 operates as a reversing switch for the balanced signal lines and thus performs the invert function. When A2A7S1 is in the + position, the input on pin 3 is connected to pin 1, 11 and likewise pin 7, 10 is connected to pin 5, 8. When A2A7S1 is in the - position, the input on pin 3 is connected to pin 5, 8 and pin 7, 10 is connected to pin 1, 11. The output is coupled to both the vertical amplifier and trigger pre-amplifier via emitter followers Q6 and Q7.

3-26. VERTICAL AMPLIFIER AND SWITCH. The vertical amplifier and switch is shown simplified in figure 3-5. When channel 1 is not to be displayed, the gate 1 signal from the vertical mode logic is at a negative potential. This back-biases CR1 and CR4 through CR2 and CR3, blocking the channel 1 signal. Similarly, when the gate 2 signal is negative, the channel 2 signal is blocked at CR5 and CR8. When the channel 1 signal is to be displayed, gate 1 is at +15 volts. In this condition, Q8, Q9, Q10 and Q11 form a differential cascode amplifier. The position controls provide a DC position in either direction to offset the display up or down. Feedback through C12 limits overshoot when a rapid transition between output levels occurs, as in the chopped mode. In the added mode, both gate 1 and gate 2 are high, and both channel 1 and channel 2 signals are coupled to Q10 and Q11. The output, therefore, will be equal to the sum of the two input signals. R115 and R116 maintain proper bias current in the add mode.

3-27. TRIGGER PREAMPLIFIER AND SWITCH. The trigger preamplifier and switch circuit is shown simplified in figure 3-6. In addition to driving the vertical amplifier, a part of the input signal from the vertical preamplifiers is picked off to drive the trigger preamplifier for use in internally triggered modes. The switch portion of the circuit is identical to that in the

vertical amplifier and switch. When the gate input is +15 volts, the selected trigger input is coupled to Q1 and Q2 and the circuit is a differential amplifier stage. When a gate is a negative potential the corresponding signal is blocked at CR9 and CR12 or CR13 and CR16. R1 permits balancing the circuit for zero output with no input signal while R54 permits matching the balance for channel 1 to that of channel 2. The output through emitter follower A2A3Q3, drives the trigger input amplifiers when internal triggering is selected.

3-28. VERTICAL OUTPUT AMPLIFIER. See Appendix A for functional description of the AN/USM-281E Vertical Output Amplifier. The vertical output amplifier is shown in simplified form in figure 3-7. It is fed by the differential output of the vertical amplifier via a 120 nanosecond delay which delays the vertical signal to allow time for the sweep to start. Since the two halves of the amplifier are identical, details are given only for one. The input signal from the delay line is terminated in a network which is adjusted by means of C20 to provide an optimum impedance match, thereby minimizing reflections. Common base amplifiers Q1 and Q2 present a low impedance input stage. R3 is a fine adjustment used to center the trace for the midrange position of the vertical position controls. The signal drives differential amplifier Q5 and Q6 through emitter followers Q3 and Q4. The differential amplifier stage has an adjustable emitter peaking network. When the vertical gain is set for X5, relay K1 is energized and R44 is switched into the emitter circuit. This increases the gain of the stage by a factor of five. When the beam finder switch is pressed, R14 is unshorted and limits the current available at Q5 and Q6. This limits the dynamic range of the stage so the trace cannot deflect beyond the face of the CRT. R21 and C11 provide thermal response compensation.

3-29. The signal is then coupled through emitter followers Q7 and Q8 to drive the differential cascode amplifier Q9, Q10, Q11 and Q12, which drives the deflection plates. C17 permits adjustment of the bandwidth while R31 and C16 provide thermal response compensation.

3-30. VERTICAL AND TRIGGER MODE LOGIC. The vertical and trigger mode logic is shown simplified in figure 3-8. When the TRIG MODE switch is set for CH1, trigger gate 1 is connected to +15 volts through R43 and trigger gate 2 is connected to -15 volts through R42. This results in the channel 1 signal pickoff being gated to the internal trigger circuits, while the channel 2 signal is blocked at the trigger switch. When the switch is set for CH2 the connections are reversed. When the switch is set to DSPLY, the trigger gates are the same as the vertical gates and the pickoff from whichever channel is being displayed is gated to the internal trigger circuits.

3-31. The vertical gates are controlled by the gate control flip-flop which, in turn, is controlled by the VERTICAL MODE switch. When the switch is set for CH1 a -5 volt QB signal through CR4 sets the flip-flop (Q13 on and QC off) to provide a positive gate 1 output through emitter follower Q11 and a negative gate 2 output through Q10. When the VERTICAL MODE switch is set for CH2 the -5 volt signal through CR3 reverses the state of the flip-flop, resulting in a high gate 2 and a low gate 1. For both CH1 and CH2 positions (and ADD), the -5 volt bias through R23 and R16 holds emitter follower Q5 off and no other outputs are produced.

3-32. When the VERTICAL MODE switch is set to ALT, a -5 volt bias signal enables the gate control flip-flop to be toggled by the flip-flop trigger signal from emitter follower Q5. The junction of R16 and R23 is grounded through CR11, and the alternate sync signal from the main sweep circuits is coupled through emitter followers QA and Q5. This signal occurs at the end of each sweep and causes the flip-flop to change state after each sweep. This results in a display which alternates between channels after each sweep. The CHOP mode is the same as the ALT mode, except the chopper, QE and QD, is enabled by a ground connection through the VERTICAL MODE switch. The chopper produces a 500 kHz output which toggles the flip-flop and results in a chopped display of both channels. The leading edge of the chopper signal is capacitively coupled to amplifier Q4. This signal blanks the CRT very briefly during the transition between channels. At the end of each sweep the alternate sync signal forward-biases CR12 and cuts off the chopper signal during the retrace interval.

3-33. In the ADD mode the -5 volts bias is removed from the flip-flop. This cuts off both QB and QC and results in both gate 1 and gate 2 being high. This causes both channel 1 and channel 2 signals to be gated to the vertical amplifier and added.

3-34. TRIGGER INPUT AMPLIFIERS. The main and delayed trigger input amplifiers are

identical; the main channel is shown simplified in figure 3-9. The circuit consists of a high input impedance buffer Q1 and feedback amplifier Q2 and Q3. The trigger signal selected by the source and coupling switches is limited to the range of +15 volts to -15 volts by CR1 and CR2. FET Q1 acts as a source follower driving Q2. The feedback loop extends the rise time of the amplifier to permit high frequency triggering. R1 permits adjustment of the bias for zero output with no input signal. When the HORIZ AMP horizontal mode is selected, the output signal from the main trigger preamplifier is applied to the output amplifier to drive the X axis. In this case the main trigger level control acts as a horizontal gain control.

3-35. COMPARATOR AND PULSE GENERATORS. The main and delayed comparator and pulse generators are similar; the main channel is shown in figure 3-10. See figure A-2 for AN/USM-281E configuration. The comparator circuit, Q4 and Q5, is controlled by the SLOPE and trigger level controls. Assume a positive slope has been selected and the trigger input signal is at a low level; Q5 will conduct and raise the voltage across R15 to a level determined by the setting of the LEVEL-HOR GAIN control, Q4 will be cut off. When the trigger input signal at the base of Q4 passes the level at R15, Q4 will conduct, resulting in a negative pulse through CR5. This causes tunnel diode CR11 to change state, and generate a very fast pulse at the base of Q6. The output pulse from Q6 is inverted by T1 to provide a negative trigger to the ramp generator. A negative pulse from the emitter of Q6 provides a trigger to the auto sweep holdoff circuit. If a negative slope is selected, Q4 will be biased on and Q5 off. As the input signal drops, Q4 will conduct less, reducing the voltage across R15. When the voltage at the emitter of Q5 drops below that at the base (determined by the level control), Q5 conducts, producing a negative trigger through CR7. In the HORIZ AMP mode the bias is removed from the emitter of Q4 and Q5 and the circuit is disabled.

3-36. RAMP GENERATORS. The main sweep ramp generator is shown in simplified form in figure 3-11. The circuit consists of a switch, CR16 and Q14, and an integrator, Q19, Q20. The switch controls the start of the sweep, and the integrator generates the negative slope ramp signal. The feedback loop through a capacitor selected by the TIME/DIV timing switch controls the sweep rate (slope of ramp) and the feedback loop through Q22 and Q13 controls the end of the sweep. When the TRIG mode is selected, the initial conditions, prior to a trigger input, are as follows: The cathode of tunnel diode CR16 is biased at approximately ±0.03 volts (armed) through R79, R40 and R41 and conducts approximately 3 milliamperes. Q14 does not conduct and its collector output is negative. This holds CR20 and CR21 on and connects the start of sweep feedback loop through CR19. The collector of Q2 is held at +15 volts (start of ramp). The positive signal through Q22 holds the anode of CR27 at +3 volts and Q13 is not conducting. The timing capacitor C_T is discharged to a level set by the feedback loop through Q21, which is conducting.

3-37. The negative ramp trigger through CR13 causes CR16 to change state to a forward drop of approximately 0.5 volts, causing a fast pulse to turn on Q14. The collector of Q14 goes positive and back-biases CR20 and CR21 and interrupting the feedback loop through CR19. This allows the timing capacitor C_T to charge through R_T. The charging rate is determined by the component values, selected by the TIM/DIV switch, and the voltage from emitter follower Q18, which is adjusted by the calibration adjustment R3, and by the TIM/DIV vernier when it is switched in (NORM horizontal mode only). As the timing capacitor charges the input to Q19 rises, causing Q20 to conduct more heavily. This causes the voltage at the collector to drop, at a steady rate proportional to the charging rate of C_T, producing a ramp signal with a negative slope.

3-38. As the ramp signal drops, the output of emitter follower Q22 drops with it. When the ramp level reaches +3 volts, CR27 conducts sufficiently to turn on Q13. When Q13 conducts, it back-biases CR16 resulting in a reverse current of about 1 milliampere (holdoff). This cuts off Q14 and ends the sweep. While Q13 is conducting, CR16 is held off and the circuit cannot be triggered. When the ramp output drops to +3 volts and Q13 conducts, Q21 is cut off. This allows the timing capacitor to discharge rapidly. When the sweep ends C_{HO} (Q17 base) begins to charge. After a holdoff delay, which is sufficient for the integrator output to return to +15 volts and stabilize, C_{HO} charges sufficiently to cause Q17 to conduct. This cuts off Q13 and returns the circuit to the initial (armed) condition, permitting CR16 to be triggered by the next input pulse.

3-39. When the ramp is triggered and the col-

lector of Q14 goes positive, its output triggers the main gate generator, Q15 and Q16. This circuit produces two output gates throughout the duration of the sweep, ending when the sweep ends. One gate (from Q15) is used to synchronize the alternate vertical sweep and to end the delayed sweep. The other gate (from Q16) MAIN GATE is negative and is used to unblank the CRT during sweep. This signal is also used to control the charging of C_{HO}. During the sweep, this signal holds the anode of CR18 negative and prevents the holdoff capacitor from charging. At the end of the sweep the gate goes positive and permits C_{HO} to begin charging.

3-40. The end of the sweep is controlled by comparator Q12 and Q13. The threshold level is normally 3 volts, set by the voltage divider R81, R82, CR30 and CR31.

3-41. In the SINGLE sweep mode, circuit operation is the same except the holdoff capacitor is prevented from charging by a -15 volt bias through the SWEEP MODE switch. When the first sweep ends, therefore, Q13 will continue conducting, holding CR16 off and preventing further triggering. This condition will be maintained until the REARM button is pressed. When the button is pressed, a positive voltage is coupled through C25 to cut off Q13. This returns the circuit to the initial (armed) condition ready to respond to the next ramp trigger. The REARM lamp is illuminated by driver Q11 at this time.

3-42. In the AUTO sweep mode an additional forward bias is applied to CR16 through the SWEEP MODE control. In the absence of a signal through CR15, this bias is sufficient to cause CR16 to go to the forward bias state (sweeping) immediately after the holdoff period. When an AUTO sweep holdoff trigger is received (coincident with each ramp trigger) it triggers the auto holdoff single shot Q7 through Q10. This circuit produces a positive output through CR15 for 50 milliseconds. This offsets the auto sweep bias and the circuit reverts to triggered operation. Since the holdoff ends after 50 milliseconds, it is necessary for trigger to occur at a rate of 20 Hz or greater, in order to trigger the sweep in this mode, otherwise the sweep will be continuous.

3-43. DELAYED SWEEP RAMP GENERATOR. The delayed sweep ramp generator is shown in simplified form in figure 3-12. The basic switch (Q12), integrator (Q17, Q18), timing and cutoff feedback loops are identical to the main sweep. Since the delayed sweep cannot begin until the main sweep is running, it needs no single sweep or auto holdoff provisions. Also, the delayed start provides sufficient time for the output to stabilize at the initial condition after a sweep without extra holdoff provision. The only difference in operation concerns the comparators, Q7 and Q8, and Q13 and Q14. When Q14 conducts at the end of a sweep and back-biases CR18, it will remain in this state, and prevent further triggering until Q13 conducts. This is the function of comparator Q7 and Q8. The ramp from the main sweep generator is applied to the comparator. When the level drops to a point equal to that set by the DELAY VERNIER, the comparator amplifier Q20 produces a negative signal at the base of Q13. This causes Q13 to conduct, dropping the emitter voltage. The resulting drop at the emitter of Q14 cuts Q14 off, permitting CR18 to return to the initial (armed) state. The delayed sweep will then begin with the next ramp trigger in the TRIG DLYD mode, or immediately in the DLY AUTO mode. The start of the sweep therefore, is delayed by the amount of time required for the main sweep ramp to reach the level selected by the sweep vernier. R24 and R25 determine the minimum and maximum range of the DELAY VERNIER control.

3-44. In the delayed sweep mode the delayed sweep ramp is applied to the horizontal deflection plates via the horizontal output amplifier. In the delayed intensify mode, the ramp is not used, but the delayed gate, which is coincident with the duration of the delayed ramp, is applied as a strobe gate to the Z axis amplifier. This causes an intensified display during the delayed ramp period. The ratio of intensified to normal brightness is adjustable by R85.

3-45. HORIZONTAL OUTPUT AMPLIFIER. The horizontal output amplifier is shown simplified in figure 3-13. It has two halves operating in push-pull fashion. Since the two halves are identical, details are given only for one. In sweep modes the main or delayed ramp (which are inverted, i. e., have a negative slope) is applied through feedback amplifier Q1. In the HOR AMP mode the external input is applied through feedback amplifier Q2. A DC level is added or subtracted at the input by the horizontal position and vernier controls. The signal is amplified by Q3 and Q4, which have gain control networks in the emitter circuit. The hori-

zontal gain control selects the X1 or X10 network, which set the gain of the stage. R12 permits centering the amplifier bias while R24 is adjusted to compensate for any difference in centering between the X1 and X10 scales. CR7 and CR8 limit the range of the signal to provide overload protection. When the BEAM FINDER is pressed, the -15 volts across CR9 and CR10 further limit the range to within the CRT size. Q5, Q7 and Q8 form a feedback amplifier which drives the deflection plate. C8, C9 and C10 permit adjustment of the linearity of the deflection over the width of the CRT.

3-46. Z AXIS AMPLIFIER. The input signal to the Z axis amplifier (figure 5-28) is the sum of four signals: The basic level set by the INTENSITY control, the chopped blanking signal from the vertical mode logic which blanks the CRT during the transition between channels in the chopped mode, the unblanking signal from the main or delayed ramp generator which unblanks the screen during sweep (this may also have a strobe gate added in intensify modes), and the external Z axis input. Q14 amplifies the summed input signal and drives output amplifier Q15, Q16 and Q17. The output amplifier is identical to the final stages of the horizontal output amplifier (paragraph 3-45). CR21 and CR22 limit the collector voltage to the range of 0 to 100 volts, to protect the circuit from power supply transients.

3-47. LOW VOLTAGE POWER SUPPLY. The low voltage power supply schematic is shown in figure 5-28. The +15 volt supply is the main supply and is the basic reference for the other power supplies. The +15 volt supply uses a TC reference zener CR9 for stable temperature performance. IC2 is a high gain operational amplifier, it senses any change in the +15 volt output by comparing the voltage and applying differences to Q3 and Q2 for correction. Q4 provides overload protection. It senses the load current by monitoring voltage across R11. When this current exceeds approximately 600 milliamperes, Q4 conducts and reduces the voltage.

3-48. The -15 volt supply is referenced to the +15 volt supply through R13. IC3 is a high gain operational amplifier. It senses any change in the -15 volt output by comparing the voltage and applying differences to Q6 and Q3 for correction. Q5 provides overload protection. It senses the load current by monitoring voltage across R19. When the current limit is exceeded, Q5 conducts and reduces the voltage.

3-49. The +100 volt supply is referenced to the -15 volt supply through R23 and R24. IC1 is a high gain operational amplifier. It senses any change in the +100 volt output by comparing the voltage and applying differences to A1A2A6Q1 and Q1 for correction. Q2 provides overload protection. It senses the local current by monitoring voltage across R29. When the current limit is exceeded, Q2 conducts and reduces the voltage. CR8 is a zener diode used to maintain pin 1 of IC1 at approximately 0 volt. CR7 protects IC1 and CR8 from overloads on the +100 volt supply. Unregulated +24 volts is obtained at the junction of CR12 and CR13. This voltage is the input voltage to the high voltage power supply. Secondary of transformer T1 also provides 6.3 volts AC for the CRT filament.

3-50. HIGH VOLTAGE POWER SUPPLY. The high voltage power supply schematic is shown in figure 5-29. The +24 volt unregulated output from the low voltage power supply provides operating power to a transformer-coupled oscillator consisting of T1 and Q1 which oscillates at approximately 40 kHz. The transformer turns ratio from primary to secondary is very high, resulting in very large peak-to-peak signal on the transformer secondary. The 40 kHz output of the oscillator is coupled from two secondary windings on T1 to two half-wave rectifiers and a voltage tripler. The signal at pin 6 of T1 is rectified by A1A1A3CR4 and filtered by C4 and C5 producing a voltage of -1150 volts DC which supplies the CRT cathode and through FOCUS control A1A1A6R1 to the focus grid of the CRT. The signal at pin 8 is rectified by A1A1A3CR3 and filtered by C6 and C7 producing a voltage of -1150 volts DC between this output and pin 9. The unblanking gate from the Z axis amplifier is fed to pin 9 of A1A1A4T1, thus the voltage differential between the grid and cathode is variable and controls the intensity of the CRT trace. Intensity limit R1 adjusts the DC potential on the cathode.

3-51. The voltage at the cathode of the CRT is compared to the +100 volt supply by the differential amplifier A1A1A3Q1 and Q2. Any difference is amplified by Q3 and the drive to the base of A1A1A4Q1 is changed, thus maintaining the CRT cathode voltage at -1150 volts DC.

3-52. The voltage at pin 5 of A1A1A4T1 is fed to A1A1A4M1, a high voltage tripler which provides approximately +10,800 volts to the CRT post accelerator.

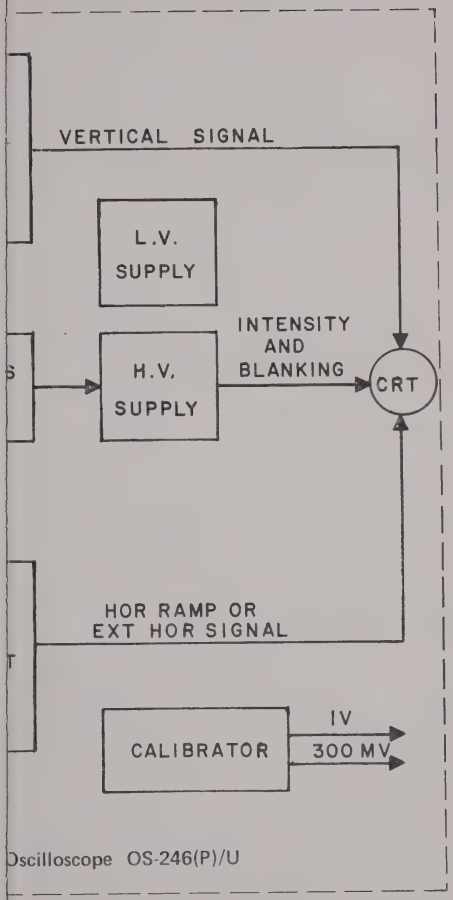

Figure 3-1. Oscilloscope Block Diagram

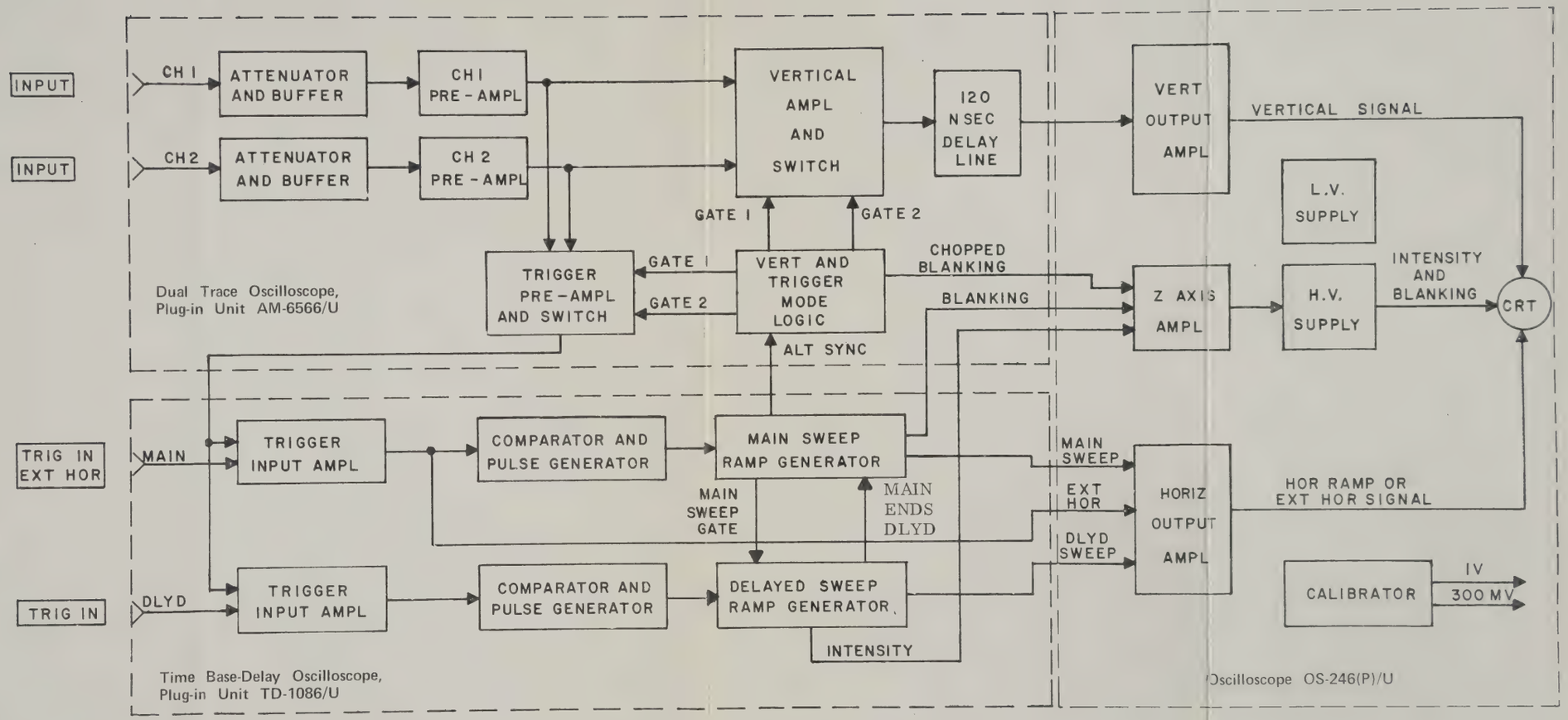

Figure 3-1. Oscilloscope Block Diagram

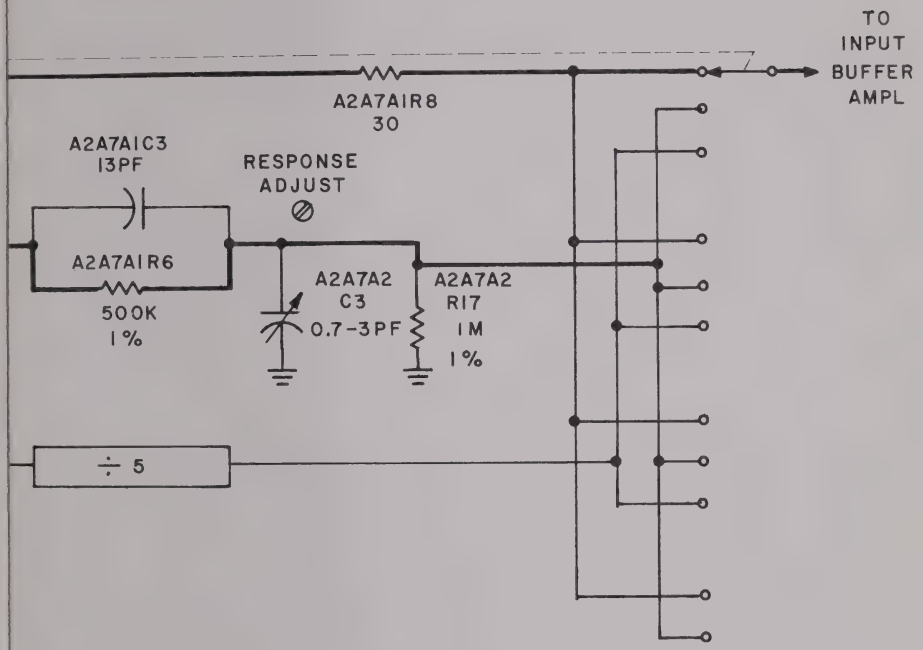

Figure 3-2. Vertical Attenuator, Simplified Schematic

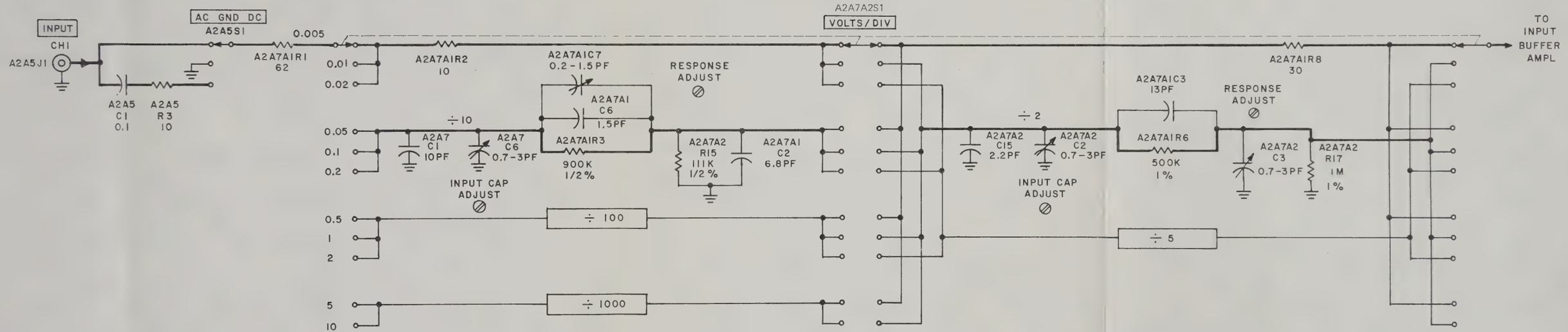

Figure 3-2. Vertical Attenuator, Simplified Schematic

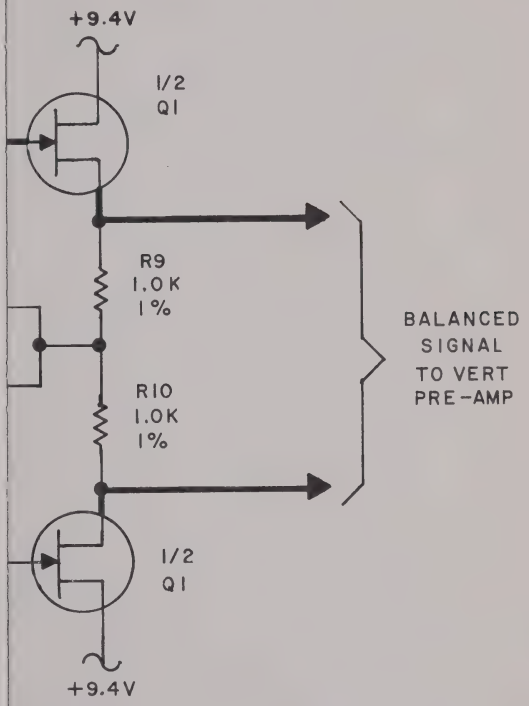

Figure 3-3. Input Buffer Amplifier, Simplified Schematic

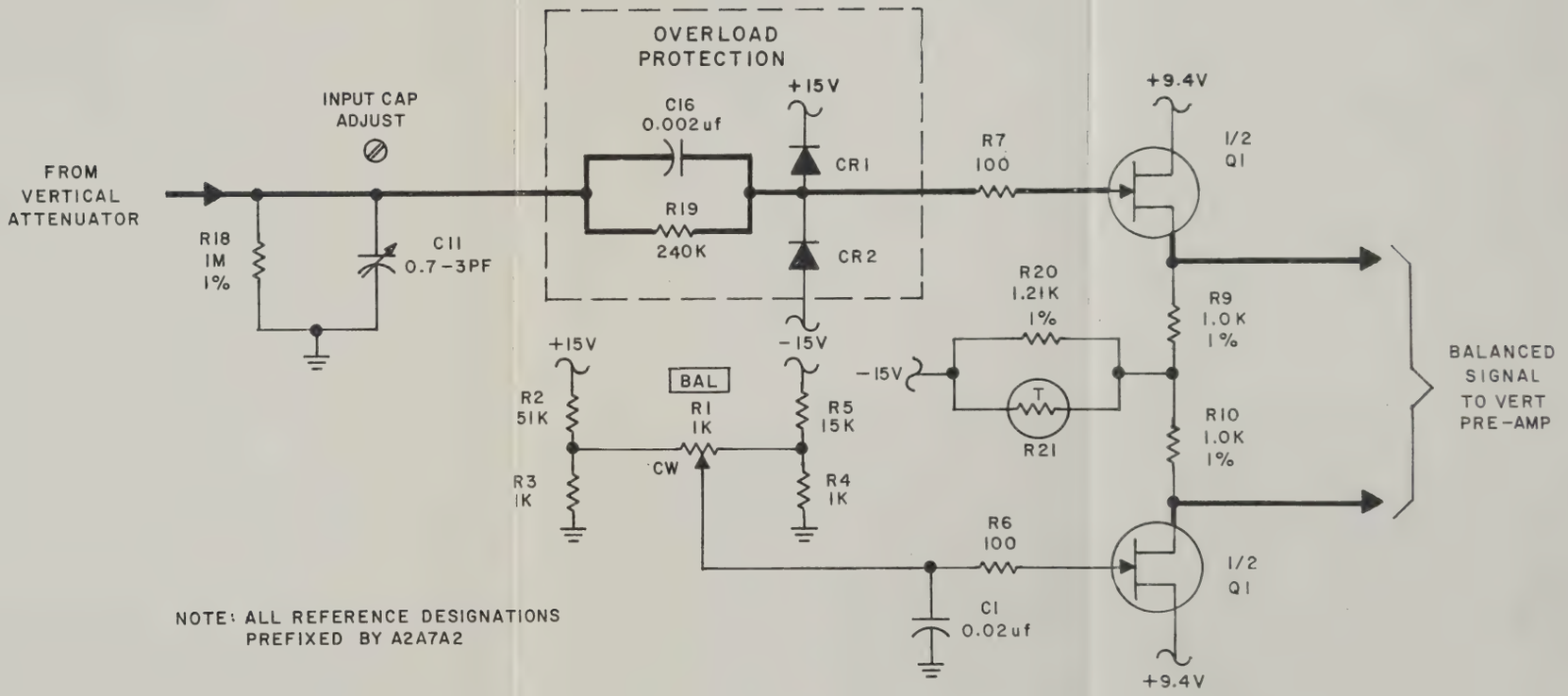

Figure 3-3. Input Buffer Amplifier, Simplified Schematic

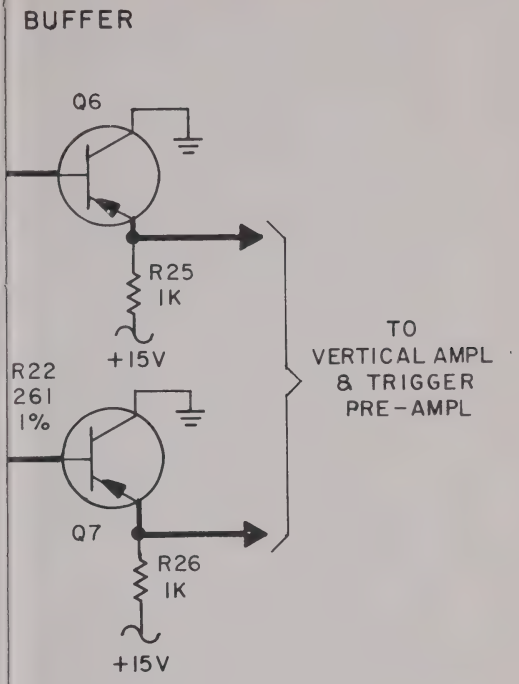

Figure 3-4. Vertical Pre-Amplifier, Simplified Schematic

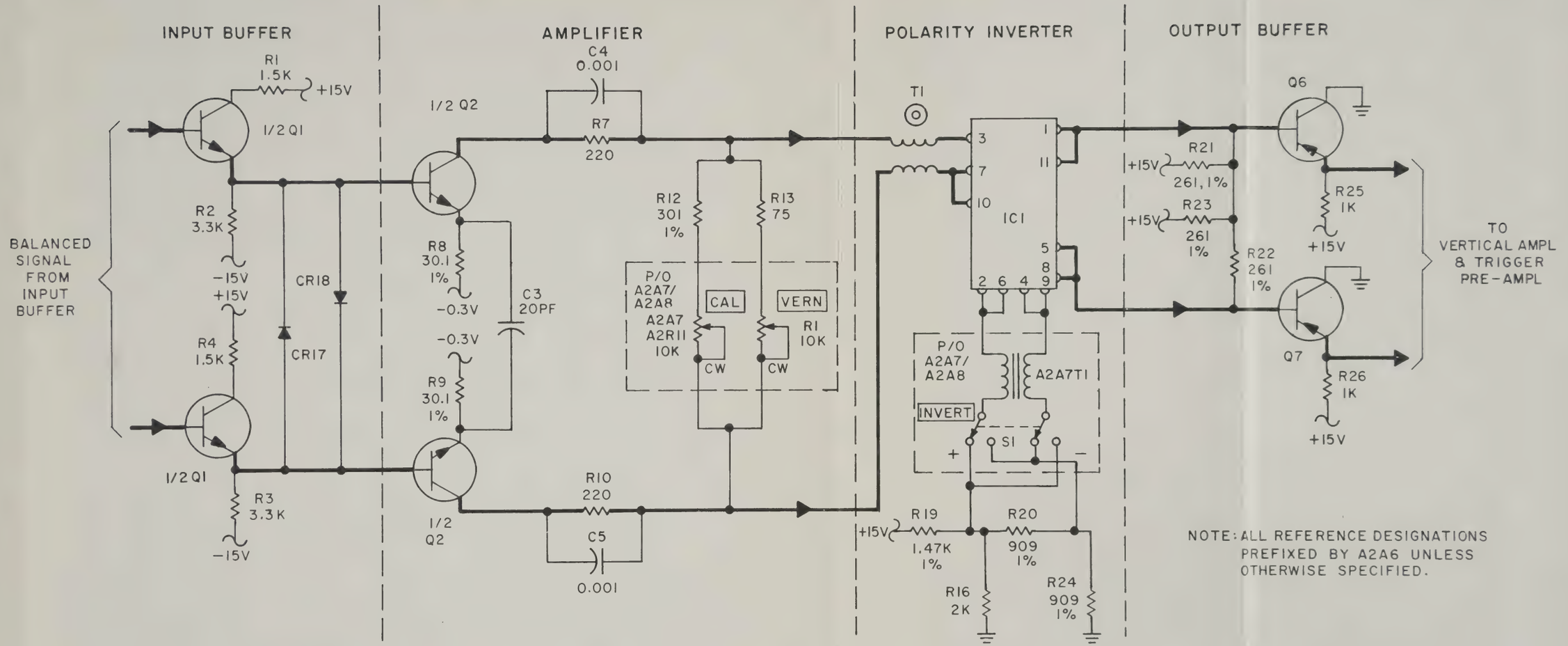

Figure 3-4. Vertical Pre-Amplifier, Simplified Schematic

LAY LINE DRIVER

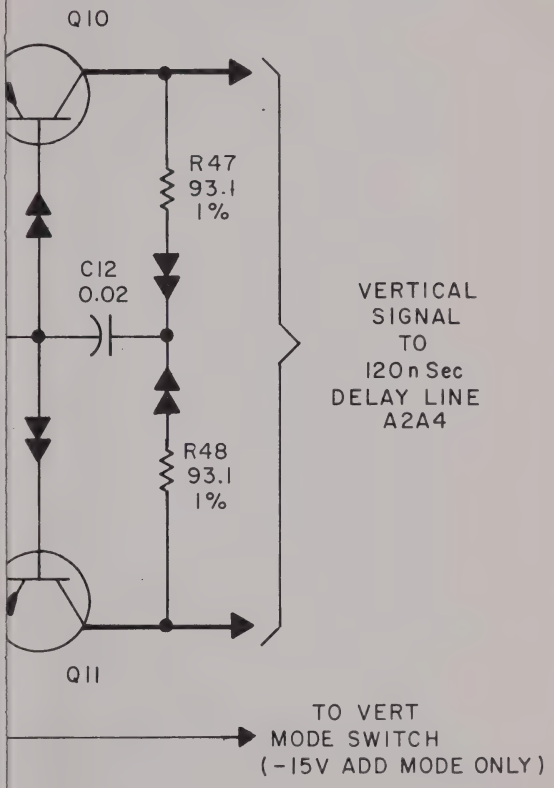

NOTE: ALL REFERENCE DESIGNATIONS PREFIXED BY A2A6 UNLESS OTHERWISE SPECIFIED.

Figure 3-5. Vertical Amplifier and Switch, Simplified Schematic

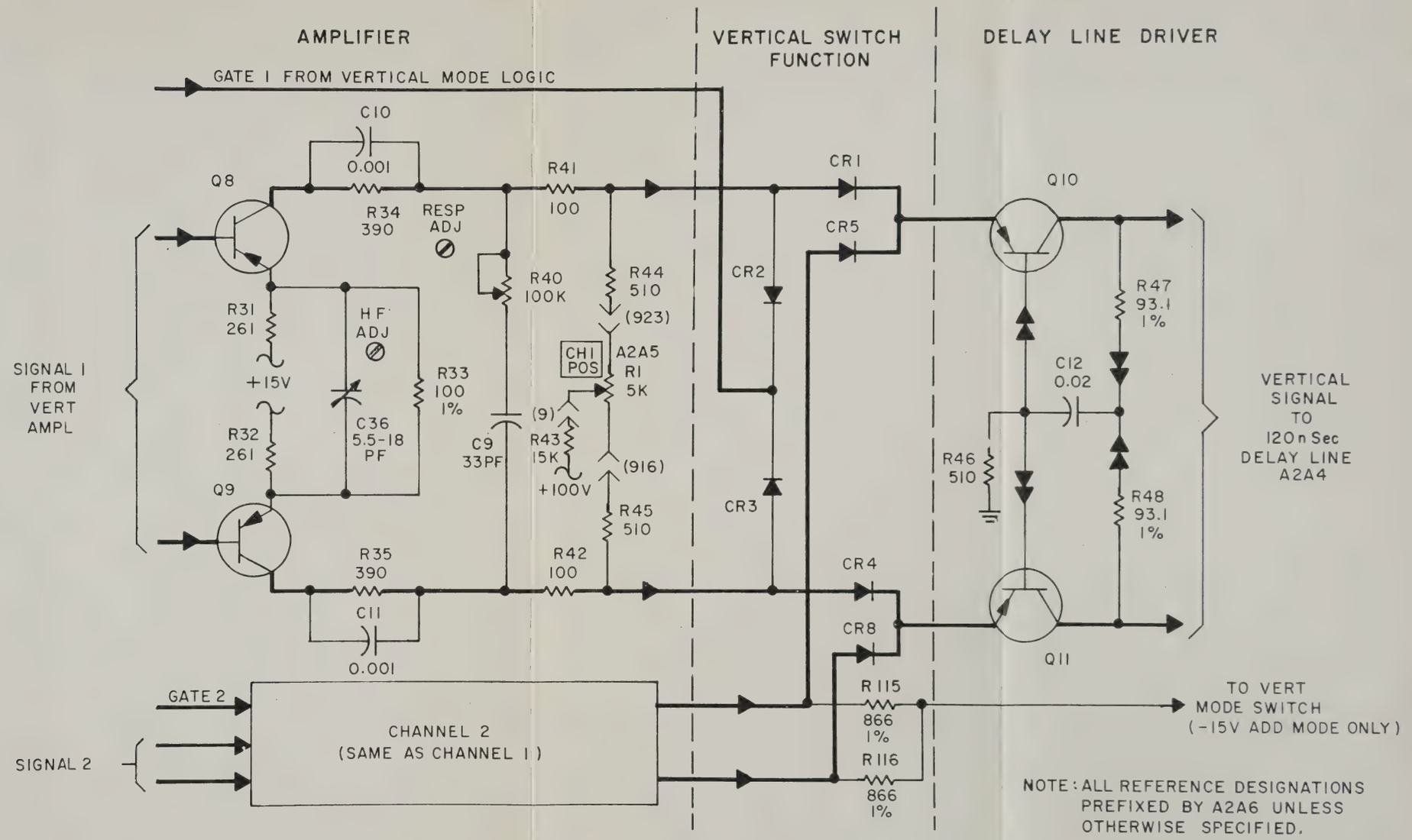

Figure 3-5. Vertical Amplifier and Switch, Simplified Schematic

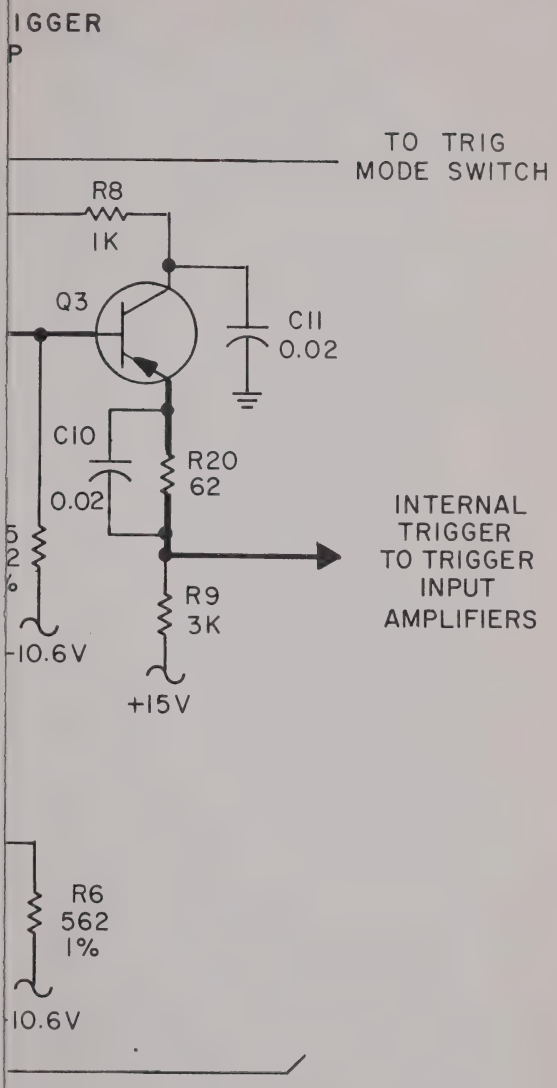

Figure 3-6. Trigger Pre-Amplifier and Switch, Simplified Schematic

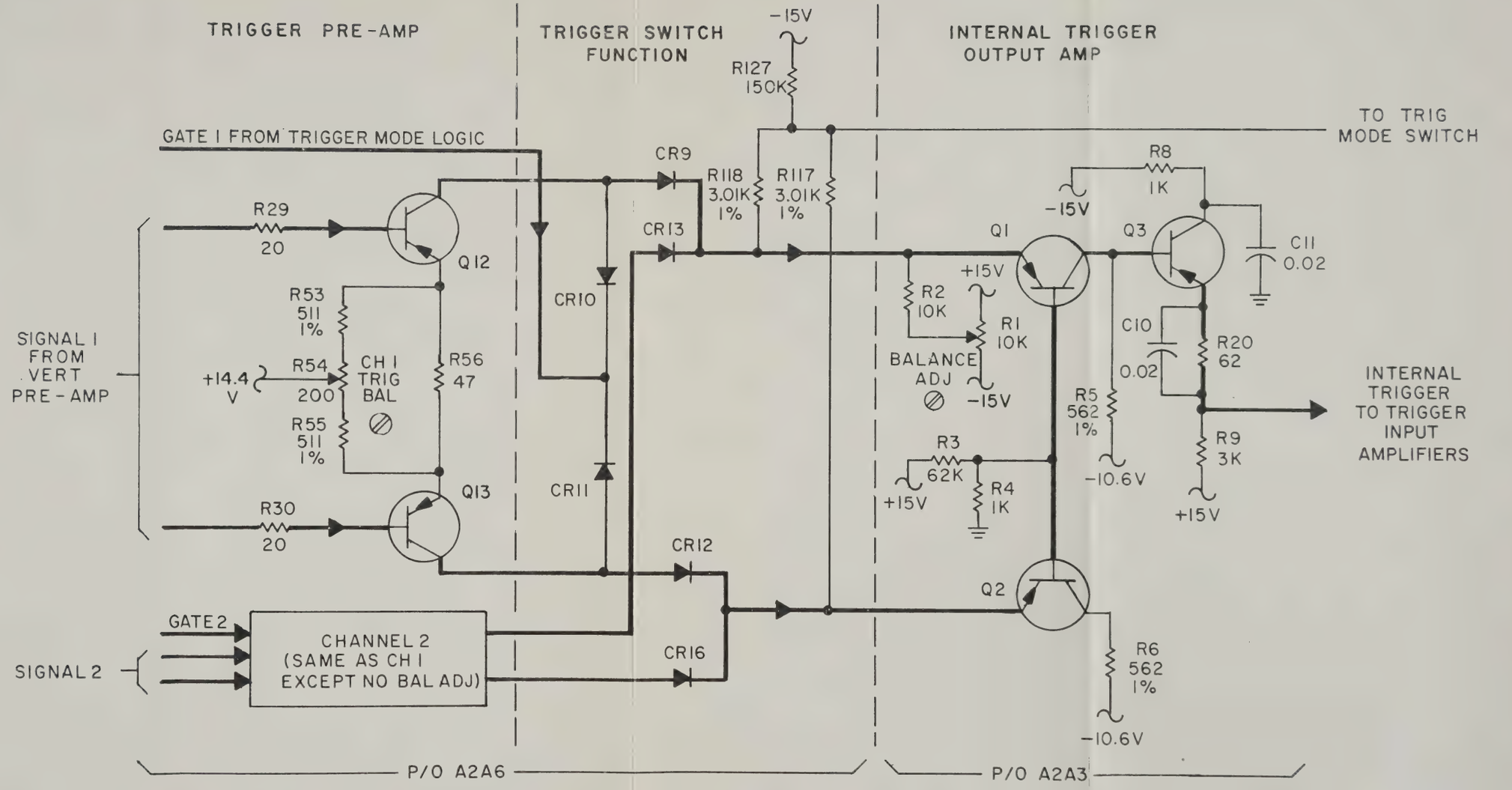

Figure 3-6. Trigger Pre-Amplifier and Switch, Simplified Schematic

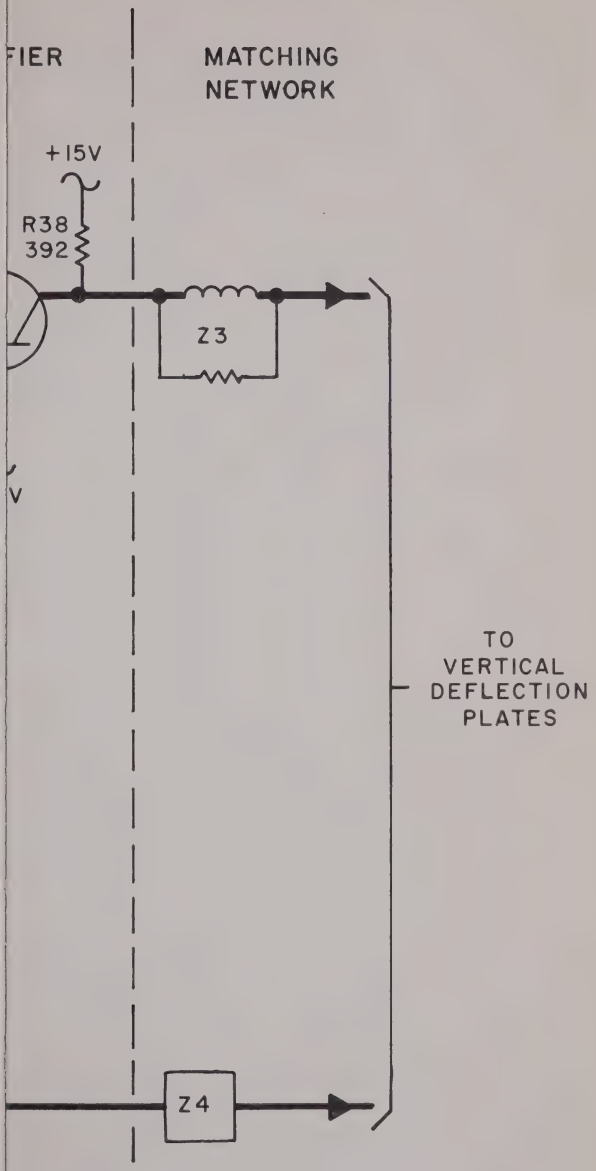

Figure 3-7. Vertical Output Amplifier, Simplified Schematic

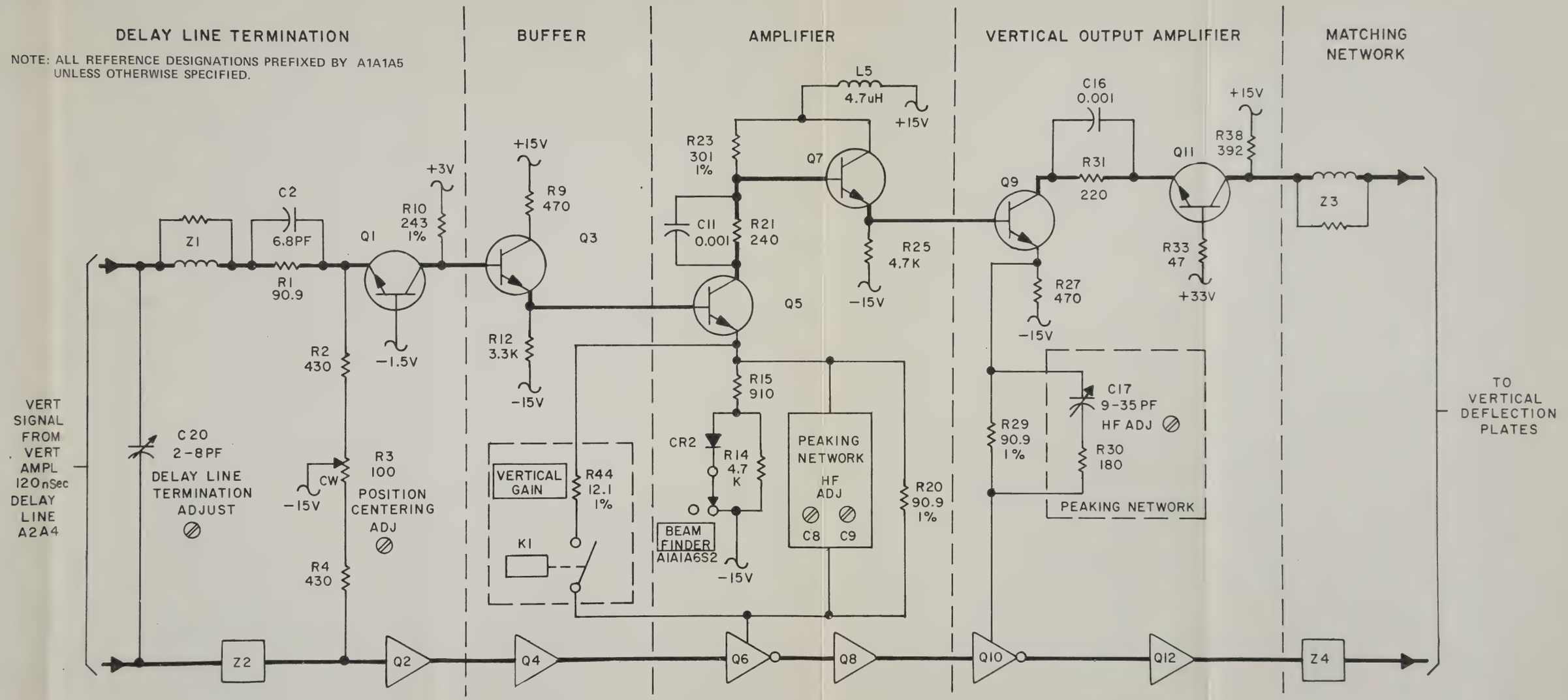

FOR USE ON AN/USM-281D CONFIGURATION ONLY. SEE FIGURE A-1 FOR AN/USM-281E CONFIGURATION.

Figure 3-7. Vertical Output Amplifier, Simplified Schematic

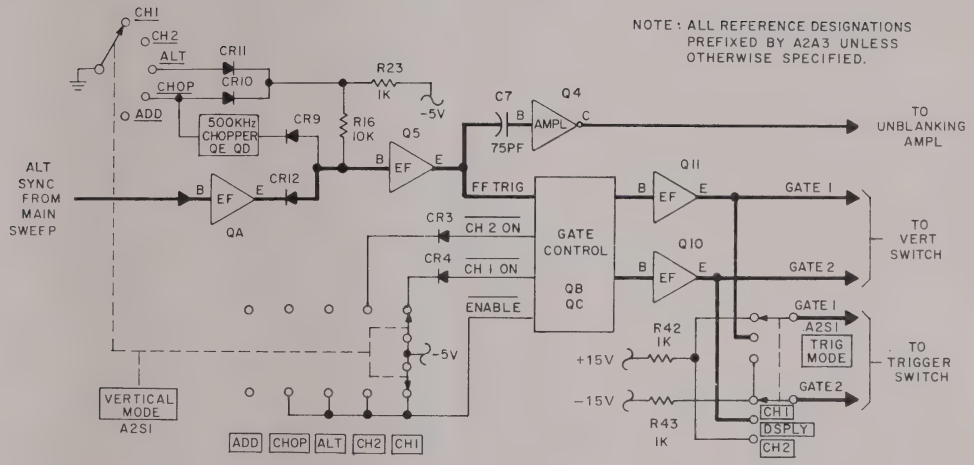

Figure 3-8. Vertical and Trigger Mode Logic, Simplified Schematic

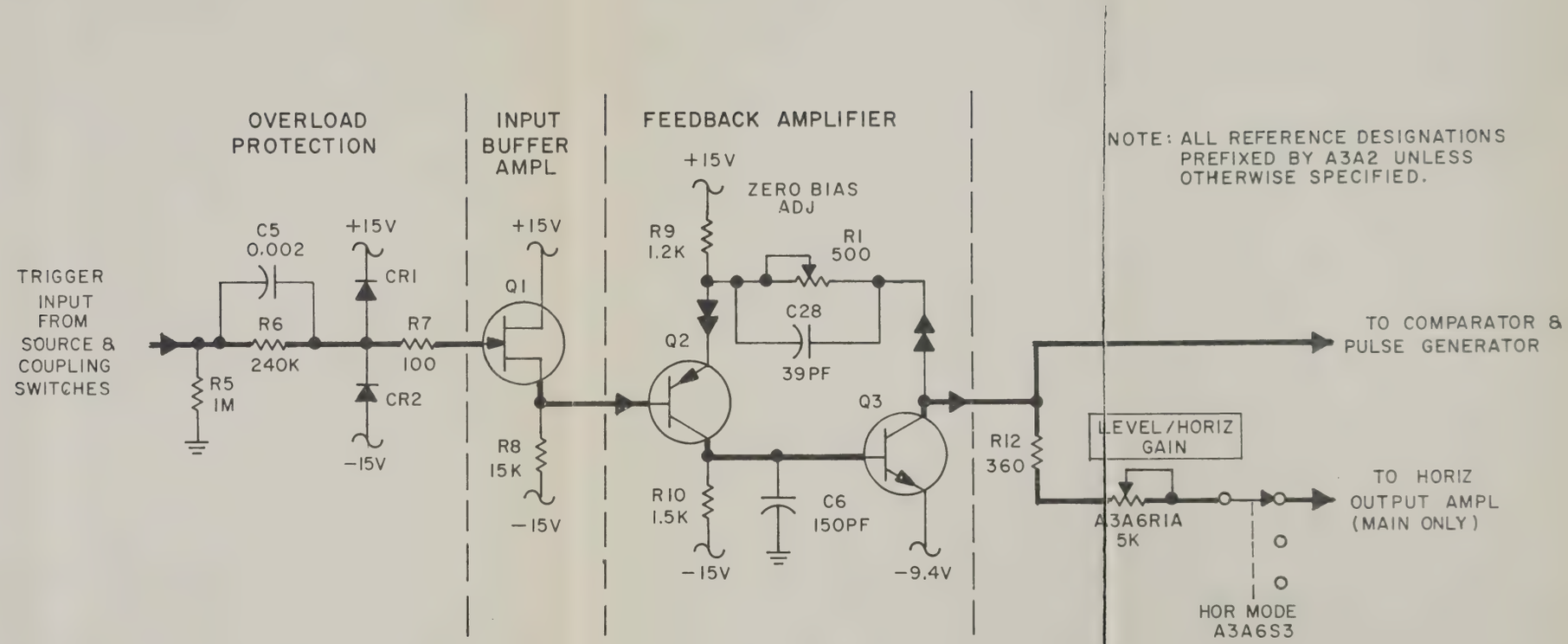

Figure 3-9. Trigger Input Amplifier (Main), Simplified Schematic

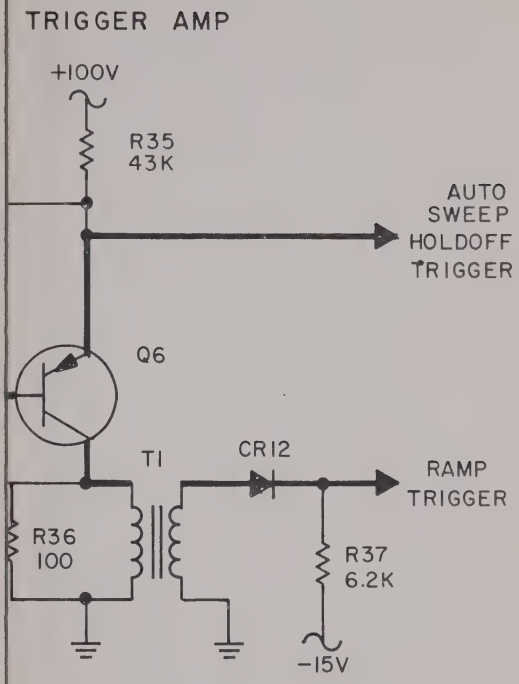

NOTE: ALL REFERENCE DESIGNATIONS PREFIXED BY A3A2 UNLESS OTHERWISE SPECIFIED.

Figure 3-10. Comparator and Pulse Generator, Simplified Schematic

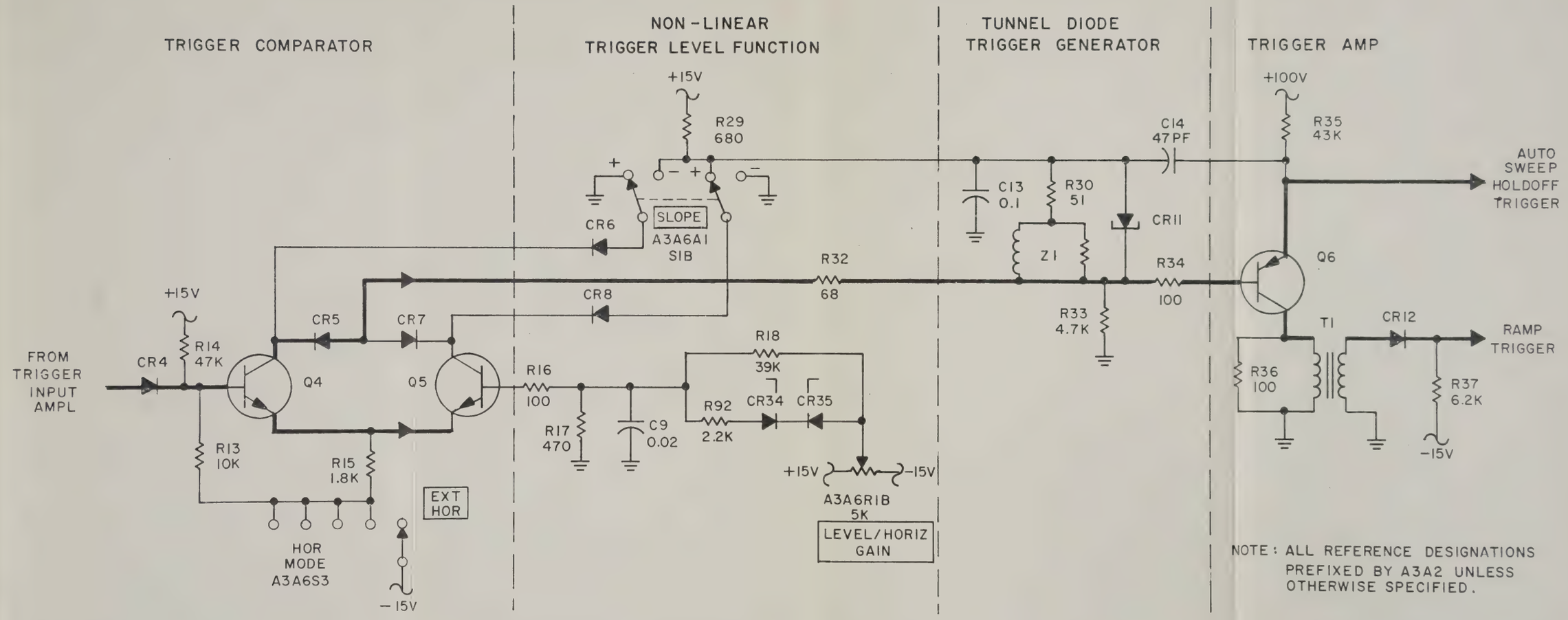

NOTE: ALL REFERENCE DESIGNATIONS PREFIXED BY A3A2 UNLESS OTHERWISE SPECIFIED.

FOR USE ON AN/USM-281D CONFIGURATION ONLY. SEE FIGURE A-2 FOR AN/USM-281E CONFIGURATION.

Figure 3-10. Comparator and Pulse Generator, Simplified Schematic

NOTE: ALL REFERENCE DESIGNATIONS PREFIXED BY A3A2 UNLESS OTHERWISE SPECIFIED.

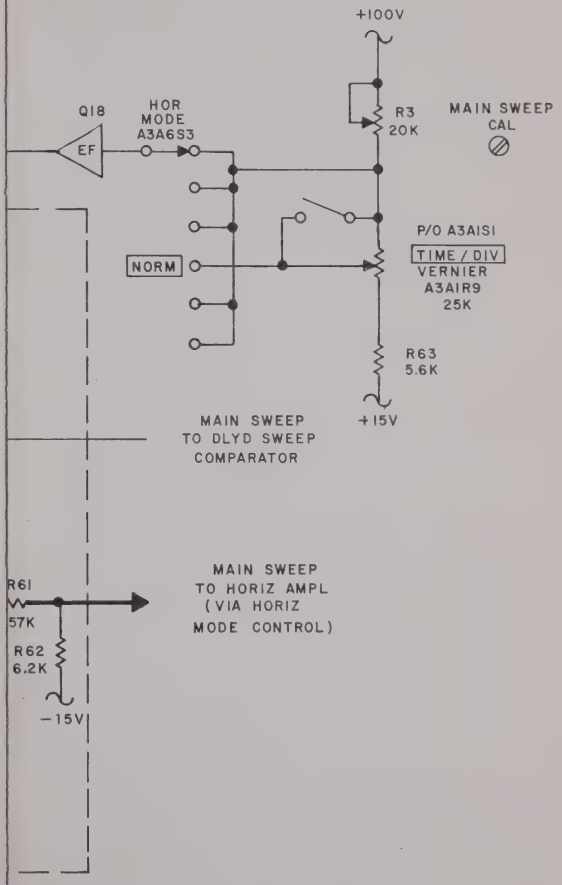

Figure 3-11. Main Sweep Ramp Generator, Simplified Schematic

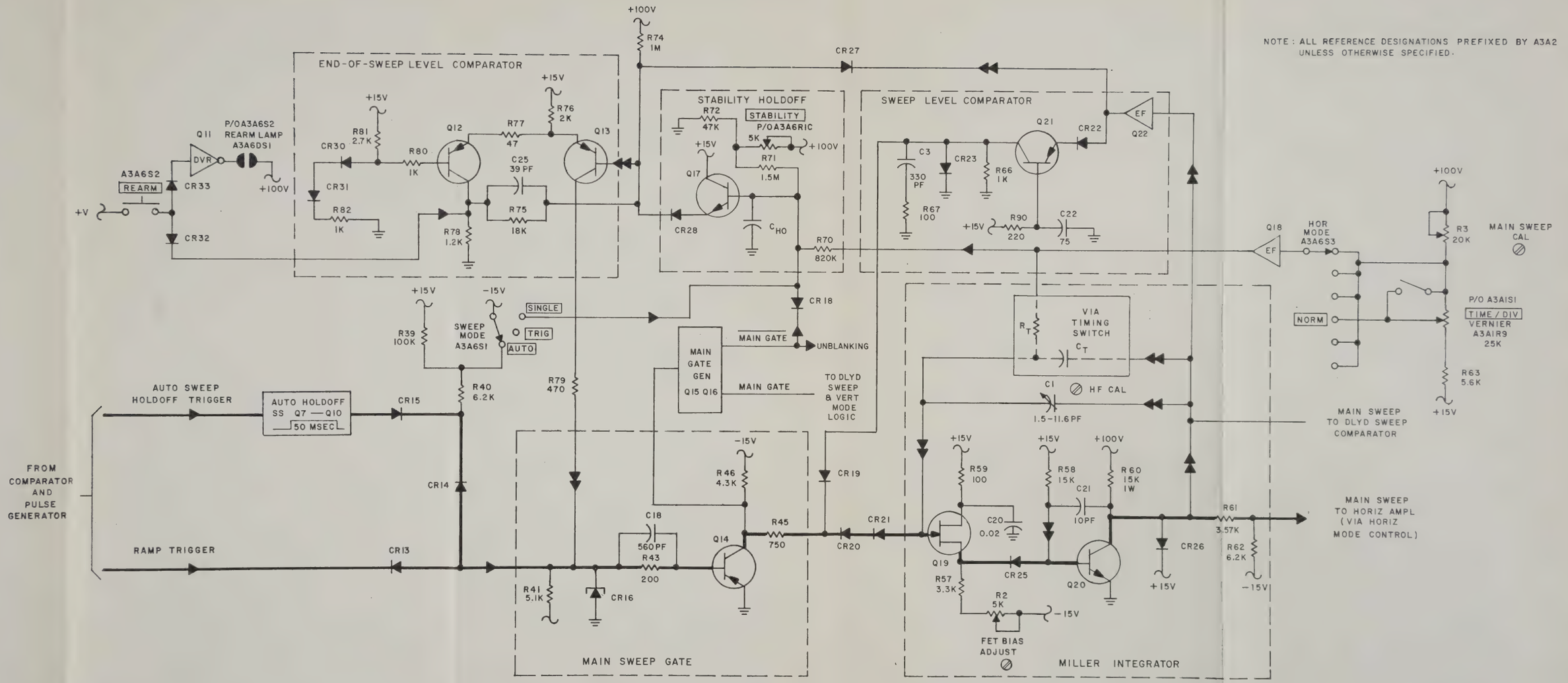

Figure 3-11. Main Sweep Ramp Generator, Simplified Schematic

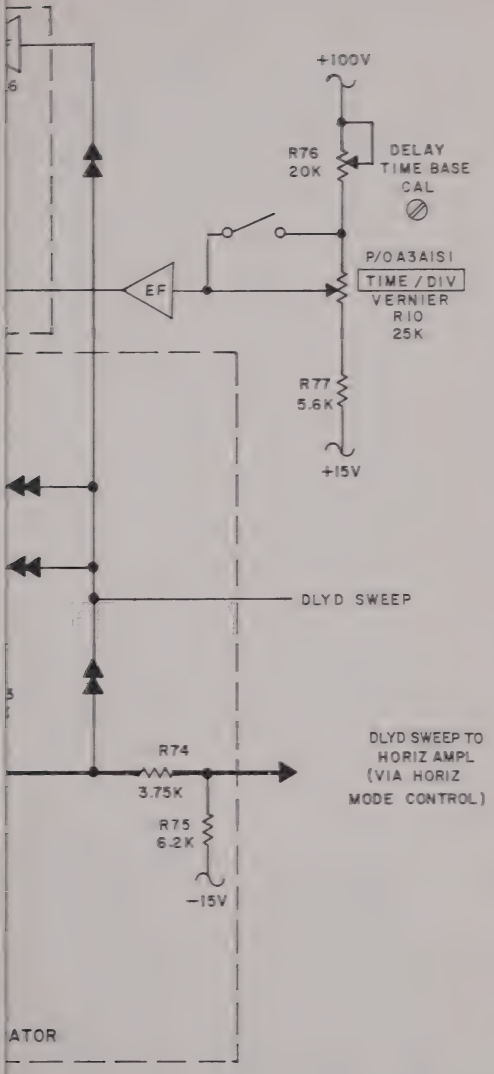

Figure 3-12. Delayed Sweep Ramp Generator, Simplified Schematic

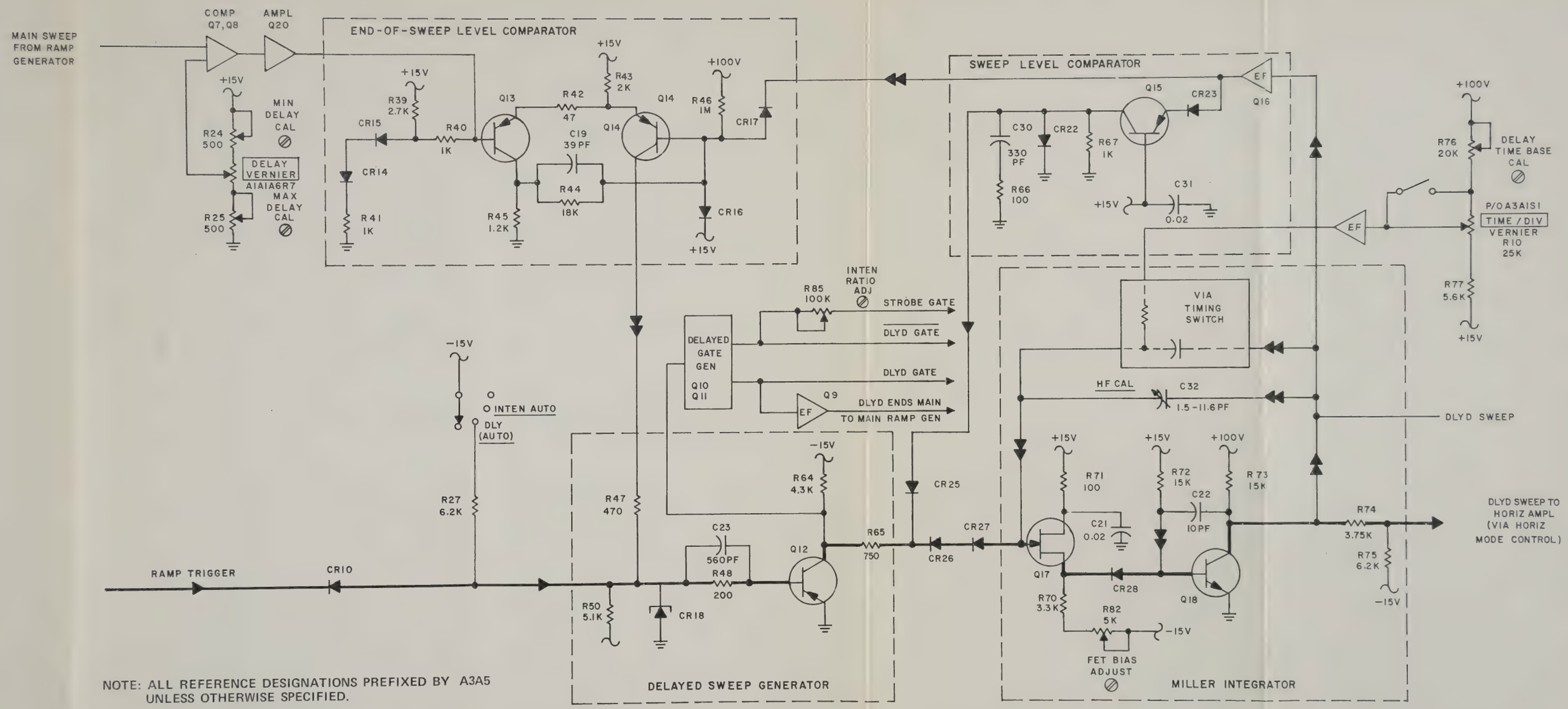

NOTE: ALL REFERENCE DESIGNATIONS PREFIXED BY A3A5 UNLESS OTHERWISE SPECIFIED.

Figure 3-12. Delayed Sweep Ramp Generator, Simplified Schematic

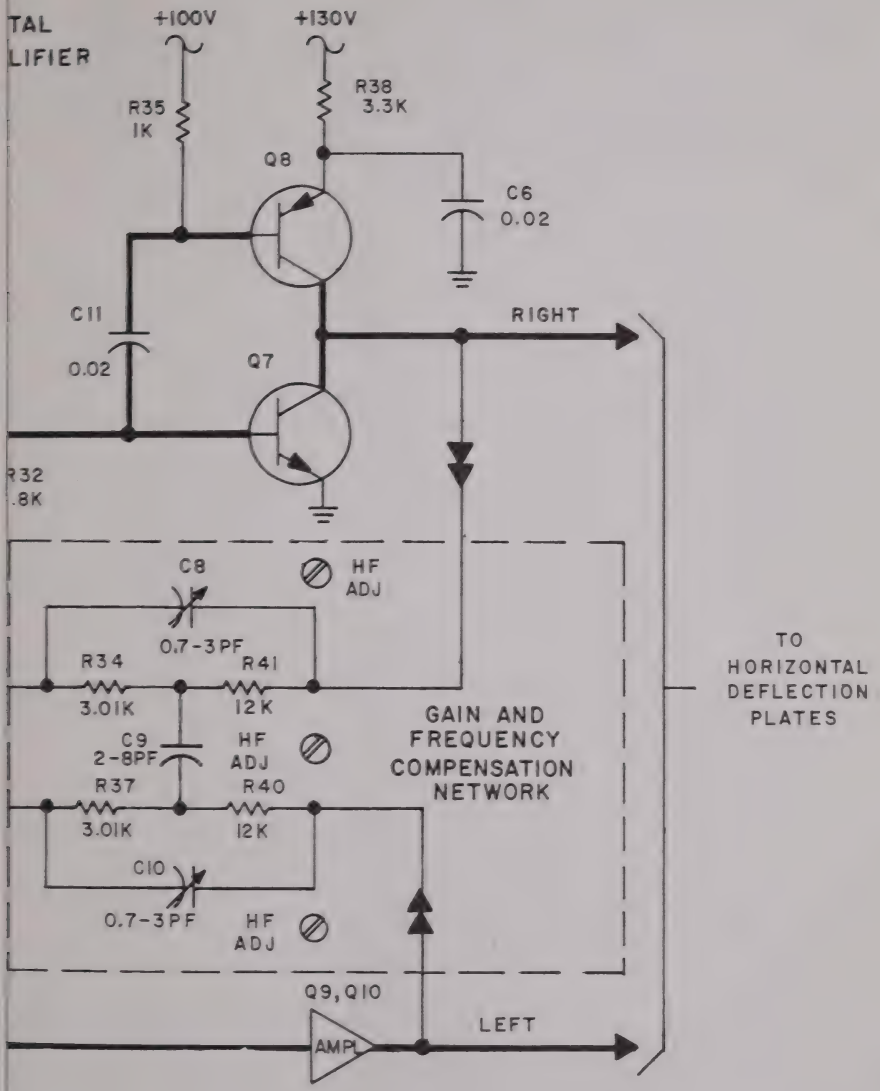

Figure 3-13. Horizontal Output Amplifier, Simplified Schematic

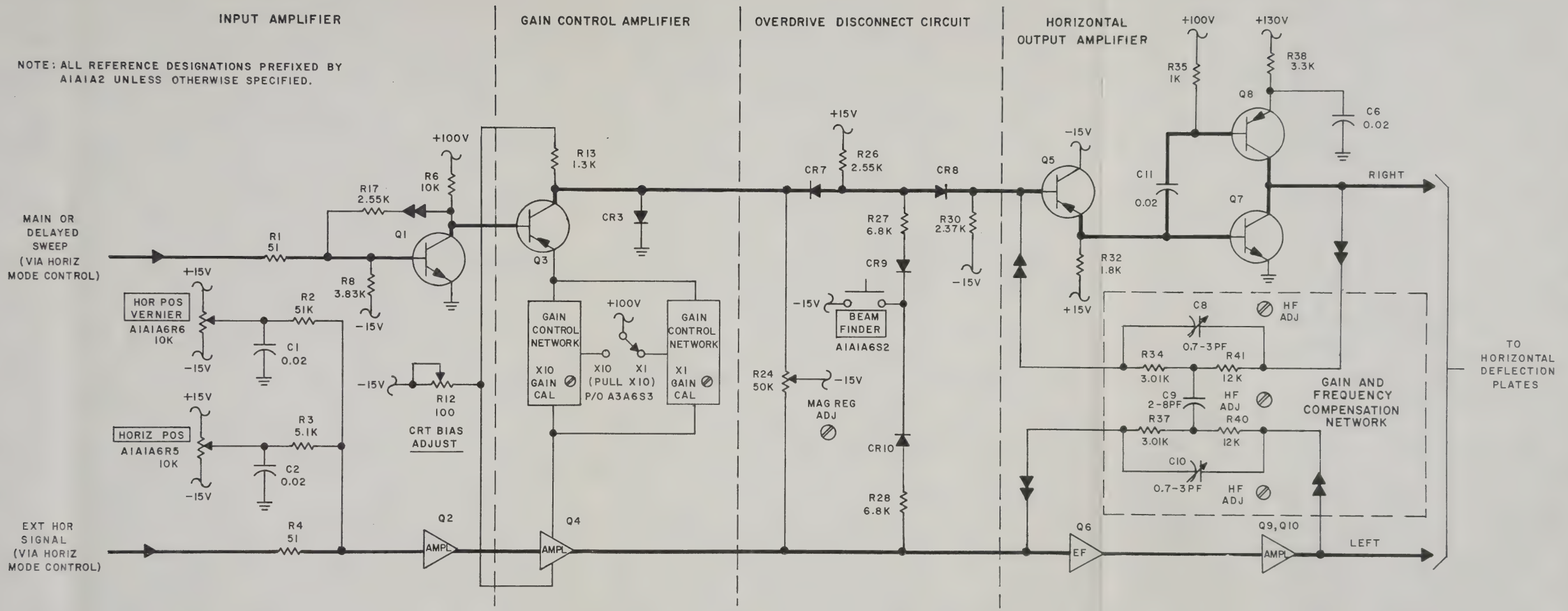

Figure 3-13. Horizontal Output Amplifier, Simplified Schematic

CHAPTER 4

SCHEDULED MAINTENANCE.

4-1. INTRODUCTION.

4-2. Purpose of scheduled maintenance is to implement preventive maintenance procedures and performance tests on a scheduled basis.

NOTE

The scheduled maintenance instructions in this manual are cancelled when the Planned Maintenance System (PMS) is implemented for this equipment aboard your ship or station.

4-3. SCHEDULED MAINTENANCE ACTION INDEX. Table 4-1 is an index of all scheduled performance tests and preventive maintenance procedures. The table covers actions required, specified intervals, maintenance action, and reference to related paragraphs.

4-4. PREVENTIVE MAINTENANCE PROCEDURES. Inspection of the oscilloscope AN/USM-281D is to be performed in accordance with intervals specified in Table 4-1. The oscilloscope should be kept free of dust and cleaned periodically. No lubrication is necessary. No special tools are required. Test equipment required for scheduled maintenance is listed in Table 4-2. Preventive maintenance consists of the periodic performance of the maintenance actions procedures to determine if the oscilloscope is functioning properly and the adjustment procedures required to maintain normal operation.

4-5. DISASSEMBLY.

4-6. Disassembly procedures for the AN/USM-281D Oscilloscope are contained in the following paragraphs. After completing repair or replacement, perform the applicable performance test procedures to determine if the oscilloscope is functioning properly. If the performance test procedures indicate that the repair has affected oscilloscope performance, perform the applicable adjustment procedure in accordance with Chapter 6.

4-7. MISCELLANEOUS COMPONENT REMOVAL AND REPLACEMENT. To remove and replace components, observe the following general rules and precautions:

a. Always set oscilloscope PWR switch off and disconnect power cord.

b. Locate component to be replaced on location diagram.

c. Remove oscilloscope cover and/or plug-in units as required to gain access to component.

d. Unsolder leads.

e. After installation of new component, replace oscilloscope cover and/or plug-in units.

4-8. INSTRUMENT COVER REMOVAL. To remove instrument cover, proceed as follows, refer to figure 4-1:

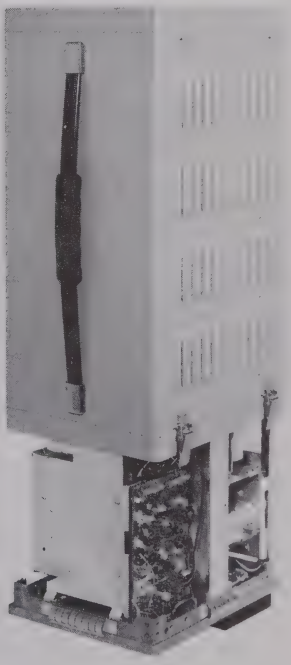

Figure 4-1. Cover Removal

a. Disconnect AC plug from its power source disconnect power cord.

b. Remove both front and rear covers by releasing four latches on each cover.

c. Place oscilloscope in vertical position, on its rear panel and slide cover off.

4-9. CRT REMOVAL AND REPLACEMENT. Perform following procedure to remove and replace the CRT. Figure 4-2 shows location of components.

a. Set oscilloscope PWR switch OFF and

b. Remove oscilloscope cover in accordance with paragraph 4-8.

WARNING

The CRT is a high vacuum tube and any severe shock or stress could cause tube to implode. To prevent personal injury, wear a face mask or goggles and gloves. Exercise extreme care when handling the CRT.

Table 4-1. Maintenance Actions

PERIODICITY	MAINTENANCE ACTION	REFERENCE
S	1. High Frequency Bandwidth Check	Para. 4-16
S	2. Check Deflection Factor	Para. 4-21
A	3. Check Vertical Vernier	Para. 4-26
S	4. Check Common Mode Rejection Ratio	Para. 4-31
A	5. Check Vertical Modes	Para. 4-36
S	6. Check Main and Delayed Sweeps	Para. 4-41
S	7. Check Sweep Delay and Jitter	Para. 4-46
S	8. Check Display Modes	Para. 4-51
S	9. Check Internal Trigger Sensitivity	Para. 4-56
A	10. Check External Trigger Sensitivity	Para. 4-61
A	11. Check External Horizontal Amplifier Bandwidth	Para. 4-66
A	12. Check External Z Axis	Para. 4-71

c. Remove plastic insert in bezel by applying a force from top to bottom.

d. Remove four screws holding bezel casting. Remove RFI shield and pull bezel casting forward.

e. Remove the upper rear panel by removing four phillips-head screws located in corners of rear panel.

f. Disconnect socket from rear of the CRT.

g. Disconnect two wires plugged onto upper left hand corner of Vertical Output Amplifier Assembly A1A1A5. These wires are the trace rotation coil wires and must feed through hole located in the bottom of the mu-metal CRT shield in the deflection plate area.

h. Disconnect five leads connected to side of the CRT.

i. Remove post accelerator lead from CRT.

Table 4-2. Test Equipment And Adapters Required For Scheduled Performance Tests.

TYPE	MANUFACTURER	MODEL NO.
RF Voltmeter	Boonton Electronics	91-DA
10 db Attenuator	General Radio	874-G10
Feedthru Voltmeter Tee	Boonton Electronics	91-14A
50 ohm Feedthru Termination	Hewlett-Packard	10100A
RF Oscillator	Tektronix	191A
AC-DC Voltage Calibrator	Hewlett-Packard	738 AR/BR
Time Mark Generator	Tektronix	180A
Audio Oscillator		0-1025/U
Pulse Generator	Hewlett-Packard	8000A
Adapters(2)	General Radio	874(GR to BNC) female
Cables(2)		BNC(male) to BNC(male) approx 3 to 4 ft. long
Cables(2)		BNC(male) to BNC(male) less than 4 in. long

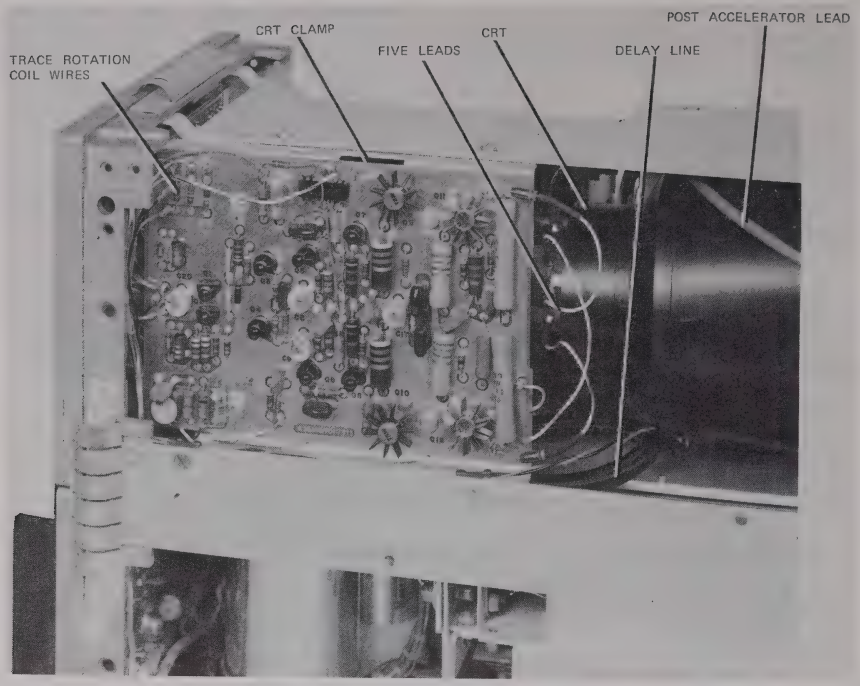

Figure 4-2. CRT Removal and Replacement

WARNING

The post accelerator lead may hold a high voltage charge. To remove this lead, use a screwdriver with an insulated handle. Ground the screwdriver with a test lead and insert the tip of the screwdriver under the insulator cap to discharge the high voltage lead.

j. Loosen screw in clamp holding the CRT. This screw can be reached from just above the Vertical Output Amplifier A1A1A5.

k. The CRT is now disconnected. Apply a steady push to the rear of the CRT and at the same time, guide the trace rotate wires. When the CRT is approximately two inches out, pull it the rest of the way out from the front. Be careful of the neck pins when extracting the CRT.

NOTE

A blank CRT socket, Dumont 3401-0980 may be placed over the socket pins to prevent bending or other damage.

l. Insert new CRT into the instrument and slide tube all the way in.

m. Replace bezel casting and plastic insert.

n. Reconnect trace rotation wires disconnected in step g.

o. Reconnect five leads to side of CRT.

WARNING

Do not overtighten CRT clamp.

p. Tighten CRT clamp. Clamp should be tight enough to prevent CRT from moving.

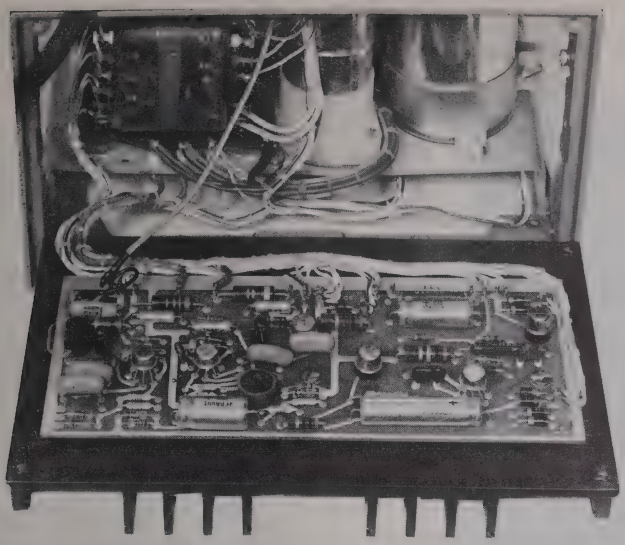

Figure 4-3. Disassembly of Lower Section

q. Press CRT socket onto the CRT base.

r. Reconnect post accelerator lead.

s. Replace oscilloscope cover.

4-10. DISASSEMBLY OF LOWER SECTION. With the cover removed, remove the four phillips head screws in the corners of the lower back panel and pull down heat sink. (See figure 4-3.) The entire lower section, can be made accessible to allow servicing of hard-to-reach areas.

4-11. ACCESS TO TIMING SWITCH. The timing switch assembly is accessible by first removing the cover, then removing the screws which fasten the Delayed Sweep Assembly A3A5 and swinging it away. See figure 4-4.

4-12. ATTENUATOR REMOVAL. The vertical attenuators may be removed for servicing as follows: (See figure 4-5.)

a. Disconnect and mark all wires plugged into the attenuators.

b. Unsolder A2A7A1R1 (or A2A8A1R1) from the AC GND DC control.

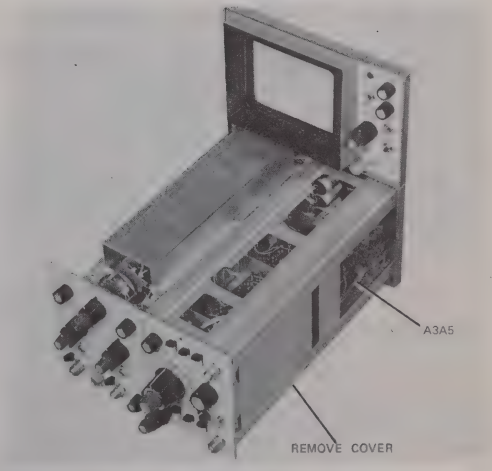

Figure 4-4. Access to Timing Switch

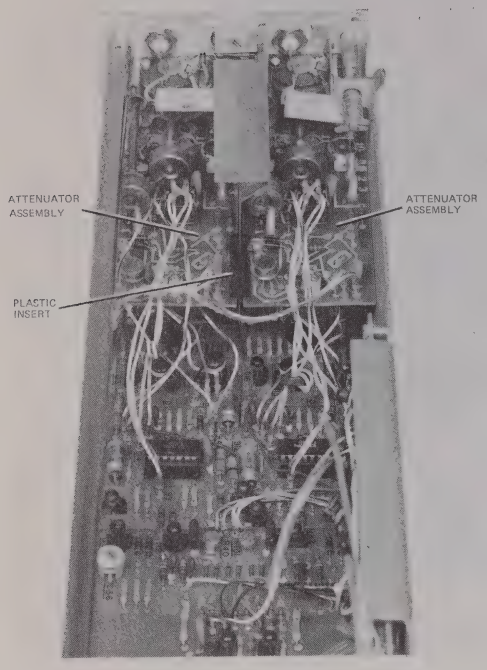

Figure 4-5. Attenuator Removal

c. Remove the knobs on the vernier and VOLTS/DIV controls by loosening knob set screws.

d. Remove the hex nut on the shaft of the VOLTS/DIV controls.

e. Remove the plastic support located between CH1 and CH2 attenuators by pulling back on it.

CAUTION

The grounding spring fingers on the attenuator switch are very fragile. Handle with care.

f. Pull back and up slightly on the rear of the attenuator.

g. To replace the attenuator, reverse the order of removal steps.

4-13. HIGH VOLTAGE SUPPLY ASSEMBLY REMOVAL AND REPLACEMENT. The high voltage supply assembly is contained in a shielded box at the upper rear of the oscilloscope, see figure 4-6. To gain access to the A1A1A3 printed circuit assembly, remove the two 1/4 inch self-tapping screws holding cover and swing down. Removal of this cover also permits access to the transformer, voltage tripler and other components.

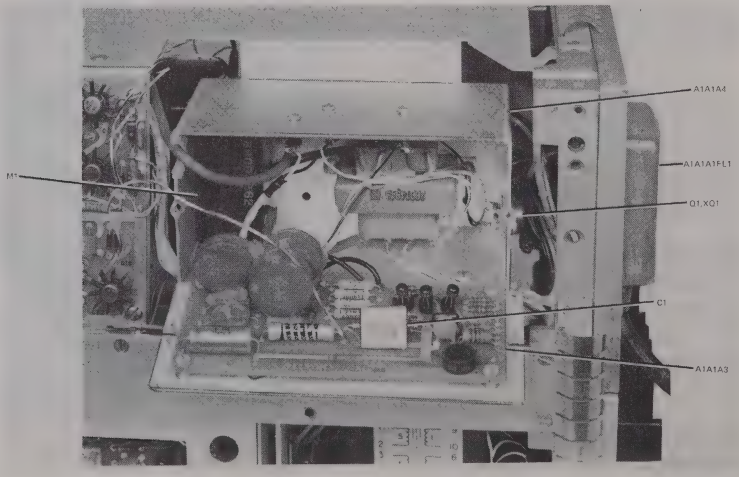

Figure 4-6. Access to High Voltage Power Supply

4-14. SCHEDULED PERFORMANCE TESTS. The following step-by-step scheduled performance tests verify that the oscilloscope is operating to minimum standards.

4-15. The procedures constitute the minimum number of performance tests which will indicate, when completed, the relative performance of the oscilloscope and its plug-in units. The performance check for each unit must be accomplished in the order listed. Do not attempt to start the procedure in mid sequence, as succeeding steps are dependent on control settings and results of previous steps.

4-16. HIGH FREQUENCY BANDWIDTH CHECK.

4-17. TEST EQUIPMENT REQUIRED. This check requires a Boonton Electronics 91-DA RF Voltmeter and Tektronix 191A RF Oscillator, 10db pad, Booton Electronics Feedthru Voltmeter Tee 91-14A and Hewlett-Packard 50 ohm Feedthru Termination 10100A.

4-18. This check should be accomplished by a technician with an ET-3 rating.

4-19. INITIAL CONTROL SETTINGS.

CONTROL	SET TO
AC GND DC (CH1)	DC
VOLTS/DIV (VERNIER) (CH1)	CAL
VERTICAL MODE	CH1
VERTICAL MODE (TRIG)	DSPLY
MAIN TRIG-COUPLING	AC
DLY'D TRIG-COUPLING	AC
MAIN TRIG-SLOPE	+
DLY'D TRIG-SLOPE	+
MAIN TRIG-SOURCE	INT
DLY'D TRIG-SOURCE	INT
TRIG AUTO SINGLE	AUTO
HORIZ MODE SWITCH	NORM
TIME/DIV-VERNIER	CAL
HORIZ POSITION	push in
MAIN SWEEP LENGTH (Rear)	FULL

4-20. PROCEDURE. The following procedure checks the high frequency bandwidth for: 3 db down; DC to 50 mHz (X1 Gain).

a. Connect test equipment listed in table 4-2, as shown in figure 4-7.

b. Set controls as follows:

VERTICAL MODE	Channel under test (CH1 or CH2)
VOLTS/DIV	For channel under test to .010

c. Set RF Oscillator to 1MHz and set level to give a full 6 cm deflection on the CRT. Record reading on the RF Voltmeter.

d. Set the RF Oscillator to 50 mHz.

e. Adjust RF Oscillator level to provide same reading recorded in step c.

f. Deflection on CRT should be greater than 4.25 divisions, thus verifying the DC to 50 mHz.

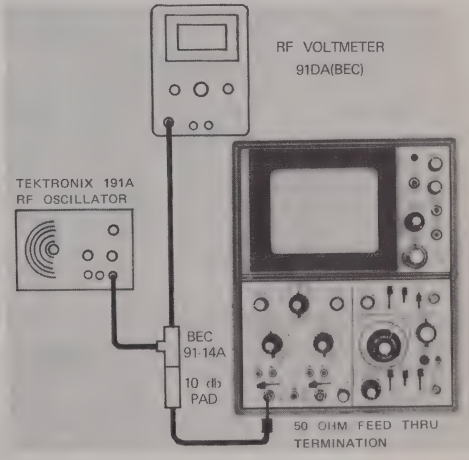

Figure 4-7.
High Frequency Bandwidth Test Setup

4-21. DEFLECTION FACTOR.

4-22. TEST EQUIPMENT REQUIRED. This check requires Voltmeter Calibrator, Hewlett-Packard Model 738 AR/BR.

4-23. This check should be accomplished by a technician with an ET-3 rating

4-24. INITIAL CONTROL SETTINGS.

CONTROL	SET TO
VERTICAL MODE	Channel under test.
VOLTS/DIV	Set to .005 for channel under test.
VERNIER portion of VOLTS/DIV	CAL
TRIG MODE	CH1

4-25. PROCEDURE. The following procedure checks the oscilloscope deflection factor for 5 mv/div to 10 v/div in eleven steps 1, 2, 5 sequence.

a. Set Voltmeter Calibrator to .03 v p-p. See figure 4-8. Connect to both CH1 and CH2.

b. Adjust CAL CH1 for 6 cm of deflection.

c. Change Voltmeter Calibrator level and oscilloscope sensitivity as shown in table 4-3.

TABLE 4-3. CRT Deflection

CALI-BRATOR V P-P	SENSI-TIVITY Volts/cm	CRT DEFLECTION cm
.030	.005	6
.060	.01	6±.18
.120	.02	6±.18
.300	.05	6±.18
.600	.1	6±.18
1.20	.2	6±.18
3.00	.5	6±.18
6.00	1	6±.18
12.00	2	6±.18
30.00	5	6±.18
60.00	10	6±.18

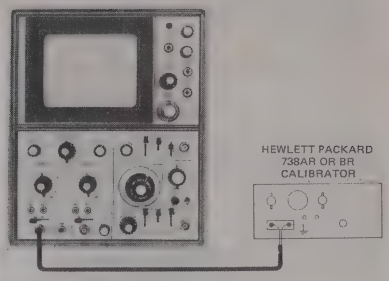

Figure 4-8. Deflection Factor, Test Setup

4-26. VERTICAL VERNIER CHECK.

4-27. TEST EQUIPMENT REQUIRED. This check requires no special test equipment. The oscilloscope internal calibrator output is used for this check, see figure 4-9.

4-28. This check should be accomplished by a technician with an ET-3 rating.

4-29. INITIAL CONTROL SETTINGS.

CONTROL	SET TO
VERTICAL MODE	Channel under test
VOLTS/DIV	.05
Vernier portion of VOLTS/DIV	CAL

4-30. PROCEDURE. The following procedure checks the vertical vernier for 2.5:1 change in sensitivity.

a. After setting up oscilloscope as shown in figure 4-9, oscilloscope should indicate 6 cm deflection.

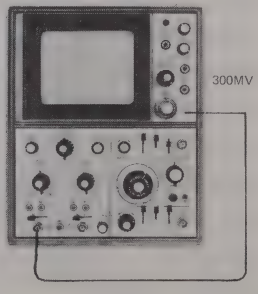

Figure 4-9. Vertical Vernier Check

b. Turn vernier portion of VOLTS/DIV control counterclockwise. There should be less than 2.4 cm deflection.

4-31. COMMON MODE REJECTION RATIO.

4-32. TEST EQUIPMENT REQUIRED. This check requires a Constant Amplitude Signal Generator, Tektronix Type 191A, 50-ohm Feedthru Termination, Hewlett-Packard Model 10100A, BNC to BNC cables under four inches long.

4-33. This check should be accomplished by a technician with a rating of ET-3.

4-34. INITIAL CONTROL SETTINGS.

CONTROL	SET TO
VERT MODE	ALT
VOLTS/DIV (Invert) (CH 2)	Pull
VOLTS/DIV (CH 1)	0.5

4-35. PROCEDURE. Connect as shown in figure 4-10 with same signal fed to each channel. This check verifies that the common mode rejection ratio is greater than 20:1 in ADD mode; DC to 25 mHz. The common mode signal is not to exceed ten times the setting of the VOLTS/DIV switch.

a. Set Signal Generator to produce 1 cm of deflection at 50 kHz.

b. Set VERT MODE switch to ADD and change VOLTS/DIV to 0.05 on each channel. Adjust CH1 or CH2 vernier (on VOLTS/DIV control) to give null on CRT.

NOTE

Do not adjust vernier (on VOLTS/DIV) again.

c. Set Signal Generator to 25 mHz and note that deflection on oscilloscope CRT is less than 0.5 cm.

4-36. VERTICAL MODE CHECK.

4-37. TEST EQUIPMENT REQUIRED. This check requires no external test equipment.

4-38. This check should be accomplished by a technician with an ET-3 rating.

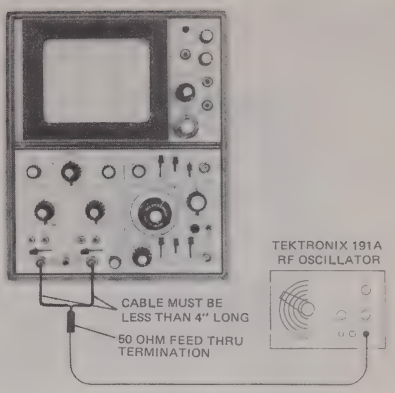

Figure 4-10. Common Mode Rejection Ratio

4-39. INITIAL CONTROL SETTINGS.

CONTROL	SET TO
VERT MODE	CH1
TRIG MODE (p/o VERT MODE)	DSPLY
VOLTS/DIV	0.2
HORIZ MODE SWITCH	NORM
TIME/DIV	.2 mSEC
VOLTS/DIV VERNIER	Push in

4-40. PROCEDURE. Connect oscilloscope 1V to INPUT jacks, channel 1 and channel 2. See figure 4-11. This check verifies vertical modes.

a. A trace of the calibrator should be present on the CRT screen. Adjust vernier portion of VOLTS/DIV to give 4 cm of deflection.

b. Set VERTICAL MODE to CH2, and repeat step a.

c. Set VERTICAL MODE to ALT, and by moving CH1 POSITION and CH2 POSITION controls, verify that both traces are synchronized and that positioning does not offset triggering.

d. Set VERTICAL MODE to ADD and verify that the signal is approx. 8 cm high. Pull the INVERT portion of VOLTS/DIV switch, and verify that there is a very small signal (almost a cancellation).

e. Set VERTICAL MODE to CHOP and TRIG MODE (p/o VERTICAL switch) to CH1. Verify that there are two traces.

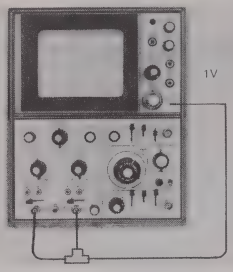

Figure 4-11. Vertical Mode Check, Test Setup

4-41. MAIN AND DELAYED SWEEP CHECKS.

4-42. TEST EQUIPMENT REQUIRED. This check requires Time Mark Generator, Tektronix Type 180A.

4-43. This check should be performed by a technician with an ET-3 rating.

4-44. INITIAL CONTROL SETTINGS.

CONTROL	SET TO
VERTICAL MODE	CH1
TRIG MODE (p/o VERTICAL MODE)	CH1
MAIN TRIG-SOURCE	INT
HORIZ MODE SWITCH	NORM
Vernier portion of TIME/DIV	CAL
MAIN TRIG-COUPLING	AC
TRIG AUTO SINGLE	TRIG
AC GND DC	DC

4-45. PROCEDURE. Connect as shown in figure 4-12. This check verifies main sweep ranges, 0.1 μs/div to 2 sec/div in twenty three calibrated steps, 1, 2, 5, sequence for an accuracy of ±3%; and delayed sweep ranges 0.1 μsec/div to 0.2 sec/div in twenty calibrated steps, 1, 2, 5 sequence for accuracy of 3%; x 10 gain accuracy ±5%.

a. Set the Time Mark Generator and TIME/DIV control as follows. Set one time mark on the 1st graticule. The 8th or 16th time mark, counting from the time mark on the 1st graticule, as indicated in table 4-4, should be on the 9th graticule within the tolerance given in the following steps. See figure 4-13.

b. Set the Time Mark Generator to give a 5 mHz signal and set TIME/DIV to 0.5 μSEC. There should be 20 cycles between the 1st and 9th graticules ±0.3 cm. With the TIME/DIV at 0.2 μSEC, there should be 8 cycles ±0.3 cm,

TABLE 4-4. Time Mark Settings

TIME MARK	TIME MARK GENERATOR	TIME/ DIV	READING cm
9th	1 sec	1 sec/div	9±0.3 *
9th	.5	.5	9±0.3 *
18th	.1	.2	9±0.3 *
9th	.1	.1	9±0.3
9th	50 msec	50 msec/ div	9±0.3
18th	10	20	9±0.3
9th	10	10	9±0.3
9th	5	5	9±0.3
18th	1	2	9±0.3
9th	1	1	9±0.3
9th	.5	.5	9±0.3
18th	.1	.2	9±0.3
9th	.1	.1	9±0.3
9th	50 μsec	50μsec	9±0.3
18th	10	20	9±0.3
9th	10	10	9±0.3
9th	5	5	9±0.3
18th	1	2	9±0.3
9th	1	1	9±0.3

* MAIN SWEEP only.

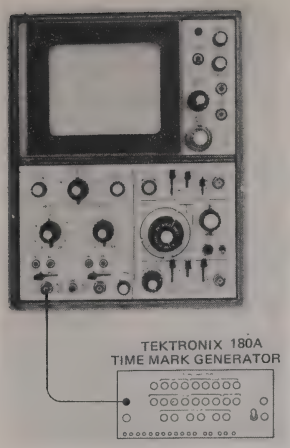

Figure 4-12. Main and Delayed Sweep Checks

and with the TIME/DIV at 0.1 μSEC, there should be 4 cycles ±0.3 cm.

c. With TIME/DIV at 0.1 μSEC, set the Time Mark Generator to 50 mHz and pull the HORIZ POSITION control. There should be 4 cycles between the 1st and 9th graticule.

NOTE

Tolerance is an additional ±2%. Error now is ±0.5 cm. It is important that the HORIZ POSITION be at its midrange position.

d. Set the TIME/DIV to 1μSEC, push in HORIZ POSITION and set the Time Mark Generator to 1 μSEC. There should be a time mark on every major graticule line, i.e., 11 marks. Turn the vernier portion of the TIME/DIV control counterclockwise. There should be more than 28 marks at this time.

e. Set oscilloscope controls same as paragraph 4-43, except, HORIZ MODE switch should be set to DLY 'D.

f. Repeat steps a. through d. In this case, however, change the TIME/DIV in accordance with table 4-4. Since the TIME/DIV still controls the main sweep, varying the DELAYED SWEEP TIME only, will cause the trace to become dim as faster sweep time occurs. In order to avoid this, every time 1, 2, 5 sequence is completed, bring the TIME/DIV control up to the DELAYED SWEEP TIME.

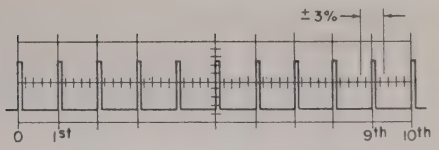

Figure 4-13. CRT Display

4-46. SWEEP DELAY AND JITTER CHECK.

4-47. TEST EQUIPMENT REQUIRED. This check requires a Time Mark Generator, Tektronix Type 180A.

4-48. This check should be performed by a technician with an ET-3 rating.

4-49. INITIAL CONTROL SETTINGS.

CONTROL	SET TO
VERTICAL MODE	CH1
TRIG MODE (p/o VERTICAL MODE)	CH1
TRIG AUTO SINGLE	AUTO
HORIZ MODE SWITCH	INTEN
TIME/DIV	1mSEC
Delayed Sweep Time portion of TIME/DIV	10 μSEC

4-50. PROCEDURE. Connect as shown in figure 4-14. This check verifies sweep delay, jitter and incremental accuracy to within ±0.3%. Jitter should be less than 1 part in 20,000 of 10 X main TIME/DIV setting.

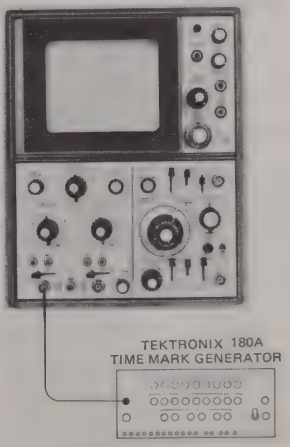

Figure 4-14. Sweep Delay and Jitter Check

a. Connect Time Mark Generator to CH1 input. Set generator for 1mSEC markers.

b. Set controls as follows: (Refer to figure 7-19 for location of adjustments).

POWER	- ON
INTENSITY	- As required
FOCUS	- Sharp display
HORIZ POSITION	- Sweep start at edge of graticule.
VERT GAIN X1-X5	- X1
DELAY VERNIER	- 1.00
VERTICAL MODE	- CH1
TRIG MODE	- CH1
CH1 POSITION	- Center Display
CH2 POSITION	- Center Display
VOLTS/DIV (CH1)	- 3 to 5 cm
VOLTS/DIV VERNIER (CH1)	- CAL
VOLTS/DIV (Pull to INVERT) CH1	- Pull
AC GND DC (CH1)	- DC
HORIZ MODE SWITCH	- NORM
TIME/DIV (Main)	- 1mSEC
TIME/DIV (Delayed)	- 0.1mSEC
TIME/DIV VERNIER	- CAL
AUTO TRIG SINGLE	- TRIG
MAIN TRIG COUPLING	- AC
MAIN TRIG SLOPE	- +
MAIN TRIG SOURCE	- INT

c. Set HORIZ MODE to INTEN, adjust A3A5R24 so that intensified portion of display starts at 2nd graticule.

NOTE

If there is no intensified portion of display, adjust A3A5R24.

d. Set DELAY VERNIER to 9.00, adjust A3A5R25 so that intensified portion of display starts at 10th graticule.

e. Set DELAY VERNIER at 1.00, confirm that intensified portion of display starts at 2nd graticule. There is interaction between A3A5R24 and A3A5R25, if necessary readjust A3A5R24.

f. Set HORIZ MODE SWITCH to DLYD.

g. Adjust A3A5R24 so that marker is at 2nd graticule.

h. Set DELAY VERNIER to 9.00 and adjust, if necessary, A3A5R25 so that marker (tenth) is at 2nd graticule.

i. Repeat step f. with DELAY VERNIER at 1.00 and repeat step g. until there is no interaction between the controls.

j. Set up as in step a. and adjust DELAY VERNIER to intensify the 6th time mark.

k. Set DELAYED TIME/DIV to 1uSEC and NORM INTEN to DLYD.

l. Adjust the DELAY VERNIER very carefully to center time mark and verify that leading edge jitter is less than 0.5cm. Disregard slow drift. See Figure 4-15.

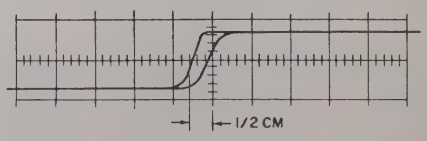

Figure 4-15. CRT Display

4-51. DISPLAY MODE CHECK.

4-52. TEST EQUIPMENT REQUIRED. No external test equipment is required for this check. The oscilloscope internal 1V calibrator output is used.

4-53. This check should be accomplished by a technician with an ET-3 rating.

4-54. INITIAL CONTROL SETTINGS.

SOURCE switches	INT
VOLTS/DIV	.2
AC GND DC	AC
VERTICAL MODE	CH1
AUTO TRIG SINGLE	AUTO
TIME/DIV	1 mSEC
Delayed Sweep Time portion of TIME/DIV	.1 mSEC
HORIZ MODE SWITCH	NORM
DELAY VERNIER	1.00

4-55. PROCEDURE. Connect as shown in figure 4-16. This check verifies the oscilloscope display modes.

a. Calibrator trace should be present on screen. Set HORIZ MODE to INTEN and observe a trace with an intensified region starting at about the 1st graticule and with 1 cm of duration.

b. Placing the HORIZ MODE to DLYD, should expand the intensified portion in step a. to full screen size.

c. Set HORIZ MODE to DLYD TRIG INTEN and vary LEVEL to give a trace with an intensified position.

NOTE

As the LEVEL control is rotated through its range, the intensified portion should disappear at the extremities of this range.

d. Positioning HORIZ MODE to DLYD TRIG DLYD should have the same effect as in step b.

e. Position HORIZ MODE to EXT HOR, SOURCE to LINE and AC GND DC to GND. At this time a trace should be present. Varying LEVEL control should change the length of this trace.

f. Position HORIZ MODE to NORM. Adjust LEVEL until trace loses synchronism. Set AUTO TRIG SINGLE to TRIG. The trace should disappear at this time. Readjust LEVEL until a synchronized trace appears to verify that the TRIG mode functions.

g. Set AUTO TRIG SINGLE to SINGLE, TIME/DIV to 0.1 SEC, and SOURCE to EXT. At this time no trace should be present. Depress REARM. Still no trace should be present; however, the REARM light should be lit.

h. Set SOURCE to INT. This should cause one sweep to occur.

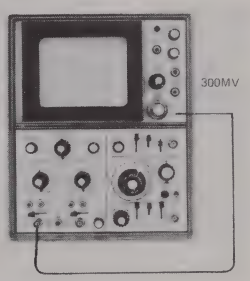

Figure 4-16. Display Mode Check, Test Setup

4-56. INTERNAL TRIGGER SENSITIVITY CHECK.

4-57. TEST EQUIPMENT REQUIRED. Two signal generators are used in this check. Audio Oscillator O-1025/U is used for the low frequency check; RF Oscillator, Tektronix Model 191A is used for the high frequency check. A 50 ohm Feedthru Termination, Hewlett-Packard 10100A is also required.

4-58. This check should be accomplished by a technician with a rating of ET-3.

4-59. INITIAL CONTROL SETTINGS.

CONTROL	SET TO
VERTICAL MODE	CH1
TRIG MODE portion of VERTICAL MODE	DSPLY
HORIZ MODE SWITCH	NORM
AUTO-TRIG-SINGLE	TRIG
SOURCE	INT
MAIN TRIG-COUPLING	DC
TIME/DIV	10 μSEC
Vernier portion of VOLTS/DIV	CAL

4-60. PROCEDURE. Connect as shown in figure 4-17. This check verifies the oscilloscope internal trigger sensitivity, checks AC, DC, low and high frequency rejection.

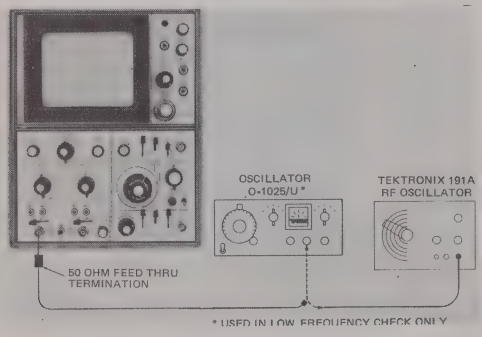

Figure 4-17. Internal Trigger Sensitivity Check

a. Set the 191A generator at 50 kHz and 0.5 centimeter of vertical deflection.

b. Vary LEVEL-HOR GAIN to verify that a trigger sweep is possible.

c. Repeat step b. with generator set at 50 mHz.

d. Reset oscilloscope controls as in paragraph 4-59.

e. Set MAIN TRIG COUPLING to HF REJ and set the 0-1025/U generator to 10 kHz.

f. Vary both the generator level and the LEVEL-HOR GAIN control until further reduction in the generator level causes loss of synchronism.

g. Without changing signal level, increase frequency of generator to 100 kHz, observe loss of synchronism.

h. Repeat steps d. through g. with MAIN TRIG COUPLING set to LF REJ, starting at 100 kHz then switching to 1 kHz.

4-61. EXTERNAL TRIGGER SENSITIVITY CHECK.

4-62. TEST EQUIPMENT REQUIRED. This check requires RF Oscillator, Tektronix Model 191A and a 50 ohm Feedthru Termination, Hewlett-Packard 10100A.

4-63. This check should be accomplished by a technician with an ET-3 rating.

4-64. INITIAL CONTROL SETTINGS.

CONTROL	SET TO
VERTICAL MODE	CH1
AUTO-TRIG-SINGLE	TRIG
SOURCE	EXT
HORIZ MODE SWITCH	NORM
MAIN TRIG-COUPLING	DC
TIME/DIV	1 mSEC

4-65. PROCEDURE. Connect as shown in figure 4-18. This check verifies the oscilloscope external trigger sensitivity, checks AC, DC, low and high frequency rejection.

a. Set generator to 50 kHz and 50 millivolts peak-to-peak.

b. Adjust LEVEL-HOR GAIN until a stable trace is present.

c. Repeat step b. with generator set to 50 mHz.

4-66. EXTERNAL HORIZONTAL AMPLIFIER CHECK.

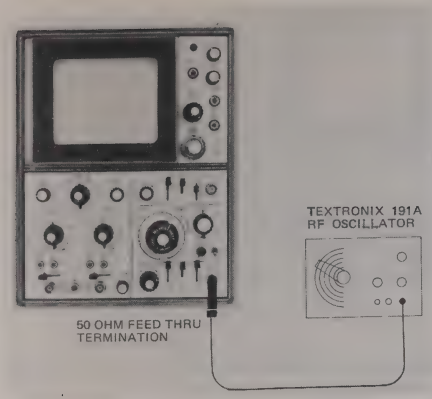

Figure 4-18. External Trigger Sensitivity Check

4-67. TEST EQUIPMENT REQUIRED. This check requires a 50 ohm Feedthru Termination, Hewlett-Packard 10100A, and Signal Generator O-1025/U

4-68. This check should be accomplished by a technician with an ET-3 rating.

4-69. INITIAL CONTROL SETTINGS.

CONTROL	SET TO
VERTICAL MODE	CH1
HOR Z MODE SWITCH	EXT HOR
SOURCE	EXT
HORIZ POSITION	Push in
LEVEL-HOR GAIN	CW
MAIN TRIG COUPLING	AC

4-70. PROCEDURE. Connect test equipment as shown in figure 4-18. This procedure checks the oscilloscope external horizontal amplifier bandwidth and deflection factors.

a. Set generator to 50 kHz and adjust output to provide 10 centimeters of horizontal deflection.

b. Check that at 4 mHz there is more than 7 centimeters of horizontal deflection.

c. Set oscillator as in figure 4-19 at 50 kHz. With oscillator at 1.2 v peak-to-peak, check that there is more than 10 centimeters of vertical deflection with the LEVEL-HOR GAIN control set CW, and less than 1 centimeter of vertical deflection with the LEVEL-HOR GAIN control set CCW.

d. Repeat step c. except pull out HORIZ POSITION and set oscillator for 120 millivolts peak-to-peak.

e. Push in HORIZ POSITION control, set oscillator for 1.2 volts peak-to-peak at 50 kHz.

f. Adjust LEVEL-HOR GAIN for 10 centimeters of horizontal deflection.

g. Set SOURCE to EXT/10 and verify approx. 1 centimeter of horizontal deflection.

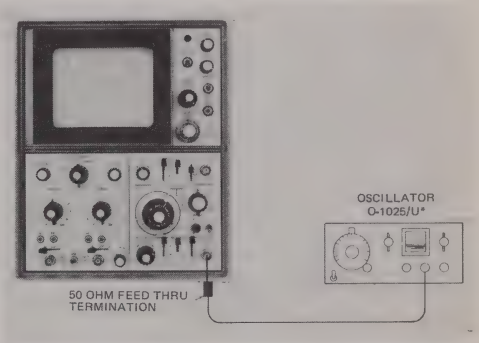

Figure 4-19. External Horizontal Amplifier

4-71. EXTERNAL Z AXIS CHECK.

4-72. TEST EQUIPMENT REQUIRED. This check requires Pulse Generator, Hewlett-Packard 8000A and a 50 ohm Feedthru Termination, Hewlett-Packard 10100A.

4-73. This check should be accomplished by a technician with an ET-3 rating.

4-74. INITIAL CONTROL SETTINGS.

CONTROL	SET TO
SOURCE	EXT
HORIZ MODE SWITCH	NORM
TIME/DIV	0.1 μSEC
VERTICAL MODE	CH1

4-75. PROCEDURE. Connect test equipment as shown in figure 4-20. This procedure checks that two volts input produces trace blanking at normal intensity with 70 ns rise time.

a. Set pulse generator for -2 volts, 70 ns wide pulse.

b. Observe that trace blanking occurs with normal intensity.

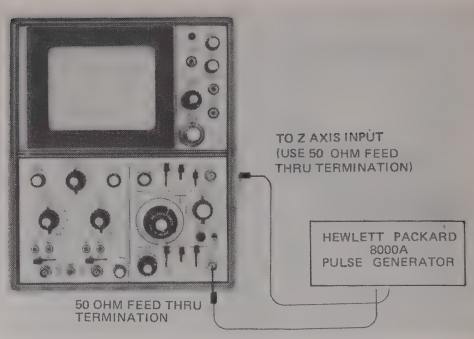

Figure 4-20. External Z Axis, Test Setup

CHAPTER 5

TROUBLESHOOTING

5-1. INTRODUCTION. This chapter contains troubleshooting information for the AN/USM-281D Oscilloscope. Troubleshooting is based on symptom recognition, system elaboration, probable faulty function, localization of probable faulty function, and localization of fault to the circuit.

5-2. SYMPTOM RECOGNITION. This is the first step in the troubleshooting procedure and is based on a thorough knowledge and understanding of the oscilloscope and its operating characteristics and limitations. Suspected malfunctions are not always the result of component failure, but are often caused by improper control settings and adjustments. A thorough knowledge of Chapter 2, Operation, is necessary to avoid erroneous malfunction indications. A type of malfunction that is not always apparent is a condition of less than peak performance. To evaluate the apparent and not so apparent troubles requires considerable experience on the part of the technician. If oscilloscope performance is doubtful the performance test instructions in Chapter 4 should point out most oscilloscope malfunctions.

5-3. SYMPTOM ELABORATION. When an oscilloscope trouble has been recognized use all available instrument aids to further isolate the trouble to a functional section. Much information can be obtained by manipulating the operating controls, and by using the CAL output to inject a signal into the vertical and horizontal sections while observing oscilloscope response. When an unusual indication is observed it should serve as a symptom for further isolating the trouble.

5-4. PROBABLE FAULTY FUNCTION. The next step in the logical troubleshooting procedure is to formulate a number of mental choices as to the cause and functional section of the malfunction. This decision must be based on a complete understanding of the oscilloscope operation, and a full identification of the trouble symptom. Refer to the overall functional description and the associated block diagram in Chapter 3, Functional Description, and select the possible faulty functional sections.

5-5. LOCALIZING THE FAULTY FUNCTION. After selecting the possible faulty functional sections the trouble must be systematically isolated to one functional section. This is accomplished by testing each section in an efficient order using the functional dependency diagrams, figures 5-1, 5-2, 5-3, and 5-4 as an aid in isolating the problem to a single functional section.

5-6. LOCALIZING TROUBLE TO THE CIRCUIT. When a problem has been isolated to a single functional section, refer to the functional signal flow diagram for further localization, then to the circuit diagram. When the faulty circuit is identified, make voltage measurements and waveform observations in accordance with the maintenance schematic diagram to locate the defective component. Before making voltage measurements and waveform comparisons, be sure to set the oscilloscope controls as indicated in the applicable functional signal flow diagrams. Also observe all instructions for injecting a signal into the circuit, as many of the waveforms are present only when an external signal is applied.

5-7. Troubleshooting, description and adjustments of major functional areas is indexed in Table 5-1. Table 5-2 lists relays and lamp in the oscilloscope, and Table 5-3 lists fuses. Table 5-4 is the maintenance turn-on procedure and lists various steps for setting front panel controls. Observe voltage limitations for all input jacks.

5-8. OVERALL OSCILLOSCOPE TROUBLESHOOTING.

5-9. The most important prerequisite for successful troubleshooting is a thorough understanding of oscilloscope operation and function. Suspected malfunctions are often caused by improper control settings such as intensity too low, display or mode switch in wrong position, trigger level maladjusted, etc. Prior to troubleshooting, refer to the operating instructions in Chapter 2 to insure that controls are set properly. When it has been determined that the controls are in the proper position and the oscilloscope is still not functioning properly, turn the oscilloscope off and remove the ver-

Table 5-1. Troubleshooting Index, Oscilloscope AN/USM-281D

	TROUBLE SHOOTING PARAGRAPH	TROUBLE SHOOTING DIAGRAM	FUNCTIONAL DESCRIPTION PARAGRAPH	ALIGNMENT/ ADJUST PARAGRAPH
DC Power	5-17	5-16	3-47	6-6
Delayed Sweep Input Circuits	5-28	5-12	3-43	6-46
Delayed Sweep Generator	5-29	5-13	3-43	6-46
High Voltage Power	5-18	5-17	3-50	6-10
Horizontal Output Amplifier	5-27	5-14	3-45	6-40
Main Sweep Input Circuits	5-25	5-10	3-34, 3-35	6-34, 6-37
Main Sweep Generator	5-26	5-11	3-36	6-43
Trigger Preamplifier and Switch	5-22	5-7	3-27	6-22
Unblanking Amplifier	5-30	5-15	3-46	6-49
Vertical and Trigger Mode Logic	5-24	5-9	3-30	6-22
Vertical Amplifier and Switch	5-21	5-6	3-26	6-20 6-28
Vertical Output Amplifier	5-23	5-8	3-28	6-25 6-28
Vertical Input Circuits	5-20	5-5	3-21, 3-22 3-24	6-31

Table 5-2. Relay and Lamp Index

REFERENCE DESIGNATION	FUNCTIONAL NAME	ENERGIZING VOLTAGE	TROUBLE-SHOOTING DIAGRAM (FIG. NO.)
A1A1A5K1	Vertical Gain Relay	15 vdc	5 - 8
A1A1A6LT1	Power On Indicator	15 vdc	5 - 16

Table 5-3. Fuse Index

REFERENCE DESIGNATION	PANEL MARKING	RATING VOLTS	RATING AMPS	CIRCUIT PROTECTED	TROUBLESHOOTING DIAGRAM (FIG. NO.)
A1A1A1F1	FUSE	250	2A. SB	AC input	5-16
A1A2A6F2	-	250	1/2 A.	+24 vdc	5-16
A1A2A6F3	-	250	1/8 A.	+130 vdc	5-16

Table 5-4. Maintenance Turn On Procedure

STEP		OBSERVE	REFERENCE
1. Initial Control Settings.			
a. Position oscilloscope controls as follows:			
Switch	Position		
POWER	off		
INTENSITY	Center		
FOCUS	Center		
HORIZ POSITION	Center		
AUTO TRIG SINGLE	AUTO		
MAIN TRIG SOURCE	INT		
MAIN TRIG SLOPE	+		
MAIN TRIG COUPLING	AC		
HORIZ MODE SWITCH	NORM		
TIME/DIV	CAL		
DLY'D TRIG SOURCE	INT		
DLY'D TRIG SLOPE	+		
DLY'D TRIG COUPLING	AC		
VERTICAL MODE	CH1		
TRIG MODE	DSPLY		
VOLTS/DIV & VERT VERNIER	CAL		
2. Turn-on.			
a. Connect oscilloscope power cord to power source.			
b. Set POWER switch ON.		Power indicator lamp will light. Trace should appear on CRT.	Schematic, figure 5-28.
c. Adjust INTENSITY for desired brightness, and HORIZ POSITION and CH1 POSITION to center trace. Adjust FOCUS for sharpest spot.			

tical unit and the time base unit as well as the cover on the main frame. Thoroughly inspect the oscilloscope for burned or loose components, loose wire connections, faulty switch contacts, or any similar condition suggesting a source of trouble. If a thorough visual inspection fails to locate the source of the malfunction, apply power to the oscilloscope and troubleshoot in accordance with the following paragraphs.

5-10. TROUBLESHOOTING PROCEDURE.

5-11. The procedure for troubleshooting the overall oscilloscope is shown in figure 5-1. This procedure utilizes indications on the CRT, in response to control settings, as a means of localizing the trouble to a single or group of functional sections. Where improper indications are obtained, figures 5-2, 5-3 and 5-4 present the probable functional section or sections of the oscilloscope which requires a more detailed check. The probable functional sections should then be checked in the most logical order. Refer to the troubleshooting text for each functional section concerned and check that section in accordance with the troubleshooting information, functional signal flow diagrams, and maintenance schematics. DC voltages for most active components such as transistors, FET's, etc, are shown on the maintenance schematics. Waveform test points are rectangles with enclosed number, placed on the maintenance schematic at various points along the main signal path, as well as on the functional signal flow diagrams indicated as test steps. Numbers inside test point symbols and test steps are keyed to the proper waveform. These waveforms indicate both time (T) and amplitude (V) and are invaluable for troubleshooting purposes. The functional signal flow diagrams are designed to indicate input and output test steps in order to localize trouble to an assembly or subassembly. To localize trouble to a major assembly, such as vertical or horizontal sections, display section, or power supplies, refer to figure 5-1. This figure localizes trouble to a major unit. Figures 5-2, 5-3 and 5-4 further localize trouble within a major unit, with reference to the appropriate functional signal flow diagram. If a malfunction occurs, refer to figure 5-1 initially, then subsequent figures depending on the major section of the oscilloscope that is malfunctioning. If there is no display on the CRT, and all initial turn-on procedures have been properly completed, depress BEAM FINDER. If still no CRT display, remove both the vertical and horizontal sections, depress BEAM FINDER again. If there is a spot on CRT, then check the vertical section and/or the horizontal section. If no spot, check the low voltage power supply, high voltage power supply, gate amplifier or the CRT. If there is a spot on the CRT after BEAM FINDER is depressed (but still no display), adjust the horizontal and vertical position controls to center the spot and adjust INTENSITY as required. If spot moves vertically only, the vertical section is a functioning properly. If spot does not move vertically, check vertical output CRT connections or the vertical section. If spot moves horizontally only, check horizontal section, if spot does not move horizontally, check the horizontal output amplifier.

5-12. OVERALL SERVICING BLOCK DIAGRAM.

5-13. The overall servicing block diagram for the oscilloscope is shown in figure 5-18. This diagram shows the overall relationship between the functional units and typical waveforms to be expected.

5-14. TEST POINTS.

5-15. Significant test points are identified on functional signal flow diagrams and maintenance schematics. Many of these test points are not marked on the equipment, however the test points shown by the schematic symbol are actually on the equipment. These test points appear on the diagrams with numerical designators (such as TP1), in addition to the circled number shown on schematics. Test steps are shown on the functional signal flow diagrams.

5-16. FUNCTIONAL SECTION TROUBLESHOOTING.

5-17. LOW VOLTAGE POWER SUPPLY TROUBLESHOOTING. The functional dependency diagram for the low voltage power supply is provided in figure 5-2 and the functional signal flow diagram is shown in figure 5-16. When trouble is suspected in the low voltage power supply check the +15 vdc supply at TP1, -15 vdc at TP2, +100 vdc at TP3 and the +130 vdc at TP4. The unregulated +24 vdc may be measured at TP6. The power transformer T1 also supplies CRT filament power. Always check the +15 vdc supply first, because this supply also feeds the -15 vdc and +100 vdc supplies. If the +15 vdc supply is variable but will not reach +15 volts,

check Q3 and Q4 and A1A2A6Q3. When trouble is suspected in the +24 vdc supply, check CR12 and CR13. After locating the trouble and completing the repair, perform the low voltage adjustment procedures in Chapter 6.

WARNING

Exercise extreme caution when troubleshooting this section of the supply, because it has voltages dangerous to life.

5-18. HIGH VOLTAGE POWER SUPPLY TROUBLESHOOTING. The functional signal flow diagram for the high voltage power supply is shown in figure 5-17 and the maintenance schematic is shown in figure 5-29. Before troubleshooting the high voltage power supply, ensure that the low voltage power supply is functioning properly, since its +24 vdc unregulated supply feeds the high voltage supply. If the low voltage supply is functioning properly the oscillator should be checked next. If the oscillator is not functioning, in addition to checking the oscillator and regulator circuit, check for a defective component in the feedback path as this could cause the regulator to cutoff the oscillator. If the oscillator is operating properly, the -1150 volt supply should be checked next because this output controls the regulator.

5-19. When the defective component is located, refer to Chapter 6 for information concerning repair and replacement. After completing the repair, perform the high voltage adjustment procedure in Chapter 6.

5-20. VERTICAL INPUT CIRCUIT TROUBLESHOOTING. The functional dependency diagram for the vertical input circuits is provided in figure 5-3 and the functional signal flow diagram is shown in figure 5-5. The vertical input circuits consist of the vertical attenuator, the input buffer amplifier and the vertical preamplifier. When trouble has been localized to the vertical input circuit, check waveforms at Q6 and Q7 emitters. Both preamplifiers are identical, therefore only one channel is shown in the signal flow diagram. If waveforms cannot be obtained as indicated, check differential cascode amplifier Q2, Ic1 and balun transformer T1. Check waveform at the output of FET Q1 to localize trouble between attenuator and preamplifier. After locating the trouble and completing the repair, refer to appropriate adjustment procedures in Chapter 6.

5-21. VERTICAL AMPLIFIER AND SWITCH TROUBLESHOOTING. The functional dependency diagram for the vertical amplifier and switch circuits is shown in figure 5-3 and the functional signal flow diagram is shown in figure 5-6. The vertical amplifier and switch circuits receive gate 1 and 2 signals from vertical mode logic, as well as signal 1 and 2 from vertical amplifiers. In the ADD mode, both channel 1 and 2 signals are coupled to Q10 and Q11. Observe waveform at Q10 and Q11 collectors and then at junction of CR2 and CR3 for gate 1, and CR6, CR7 for gate 2. To further localize trouble within the circuit, check waveforms at inputs to Q8, Q9 for signal 1 and Q21, Q22 for signal 2. After locating the trouble and completing the repair, refer to the applicable adjustment procedures in Chapter 6.

5-22. TRIGGER PREAMPLIFIER AND SWITCH TROUBLESHOOTING. The functional dependency diagram for the trigger preamplifier and switch is shown in figure 5-3. The functional signal flow diagram is shown in figure 5-7. Input signals to this circuit drive the vertical amplifier and the trigger preamplifier for internally triggered modes. The switch portion of this circuit is identical to the circuit in paragraph 5-16. Observe waveform at the output of Q3, if waveform is incorrect, check signal 1 and signal 2 at the junction of CR10, CR11 and CR14, CR15 respectively. After localizing trouble to a specific circuit and repairing, refer to the adjustment procedures in Chapter 6.

5-23. VERTICAL OUTPUT AMPLIFIER TROUBLE SHOOTING. The functional dependency diagram for the vertical output amplifier is shown in Figure 5-3. The functional signal flow diagram is shown in figure 5-8. If a vertical display cannot be obtained on their channel, and other vertical input circuits are not faulty, the problem is probably in the output amplfiers Q1 through Q12 or the connections to the CRT deflection plates. Observe waveforms at Q7 emitter for channel 1 and Q8 emitter for channel 2 to further localize the malfunction within the vertical output amplifier assembly. When the trouble is isolated to this functional section, after repair perform the adjustment procedures in Chapter 6 to restore section to an operational condition.

5-24. VERTICAL AND TRIGGER MODE LOGIC TROUBLESHOOTING. The functional dependency diagram for the vertical and trigger mode logic is shown in figure 5-3. Figure 5-9 is the functional signal flow diagram. The vertical and trigger mode logic provides chopped blanking to the Z axis amplifier, gates 1 and 2 to the vertical preamplifier, gates 1 and 2 to the trigger switch. Vertical gates are controlled by the gate control QB and QC flip-flop, except in the ADD mode. Signal input is from the main sweep main gate. In troubleshooting, check waveform at Q4 output then at the input to QA. Further localize trouble by checking waveforms at the input to Q5 and Q4. If malfunction is in the CHOP mode, check waveforms at the 500 kHz chopper QE and QD. If trouble is isolated to this functional section, after repair perform the adjustment procedures in Chapter 6.

5-25. MAIN SWEEP AND TRIGGER INPUT CIRCUIT TROUBLESHOOTING. The functional dependency diagram for the main sweep input circuits is shown in figure 5-4 and the functional signal flow diagram is shown in figure 5-10. The main sweep input circuits consist of trigger input amplifiers and comparator and pulse generators. If the waveform at Q3 collector is incorrect, check Q1, Q2 and Q3. The signal from Q3 is fed to the comparator circuit, Q4 and Q5. Check waveform at Q4 collector, if improper, check CR4 and Q4. When the horizontal mode switch is in the EXT HOR position, the comparator circuit is disabled. After locating the trouble and completing the repair, perform the adjustment procedures in accordance with instructions in Chapter 6.

5-26. MAIN SWEEP RAMP GENERATOR TROUBLESHOOTING. The functional dependency diagram for the main sweep ramp generator is shown in figure 5-4, and the functional signal flow diagram is shown in figure 5-11. The main sweep output to the horizontal mode control is observed by measuring the waveform at Q20 collector. Input is measured at the base of Q14. If the waveform is correct at Q14 base, and incorrect at the collector of Q14, check Q14 and associated circuitry. If there is an output at Q14 but not at Q20, check Q19 and the feedback loop through the timing switch and Q21, Q22 and Q13. After locating the trouble using the maintenance schematic, and after repair, make adjustments in accordance with procedures in Chapter 6.

5-27. HORIZONTAL OUTPUT AMPLIFIER TROUBLESHOOTING. The functional dependency diagram for the horizontal output amplifier is shown in figure 5-4, and the functional signal flow diagram is shown in figure 5-14. The horizontal output amplifier includes the calibrator, shown in the maintenance schematic, figure 5-25 and the unblanking amplifier shown in the functional signal flow diagram figure 5-15. Horizontal output to the right and left CRT deflection plates is measured at the collector of Q8 and Q9 respectively. The right deflection output measures 70 vdc, and the left deflection output measures 60 vdc. Input to the horizontal amplifier is measured at the base of Q1. If there is an output at the base of Q1, but not at the collector of Q7, check waveform at the base of Q3. Transistors affecting right deflection are Q1, Q3, Q5, Q7 and Q8. Transistors affecting the left deflection output are Q2, Q4, Q6, Q9 and Q10. After locating the trouble and completing the repair, perform the adjustment procedures in accordance with Chapter 6.

5-28. DELAYED SWEEP INPUT CIRCUITS, TROUBLESHOOTING. The functional dependency diagram for the delayed sweep input circuits is shown in figure 5-4, and the functional signal flow diagram is shown in figure 5-12. The delayed sweep input circuits consist of trigger input amplifiers and comparator and pulse generators. If the waveform at Q3 collector is incorrect, check Q1, Q2 and Q3. The signal from Q3 is fed to the comparator circuit, Q4 and Q5. Check waveform at the collector of Q4, if improper, check CR31 and Q4. After locating the trouble and completing the repair, perform the adjustment procedures in accordance with instructions in Chapter 6.

5-29. DELAYED SWEEP RAMP GENERATOR TROUBLESHOOTING. The functional dependency diagram for the delayed sweep ramp generator is shown in figure 5-4, and the functional signal flow diagram is shown in figure 5-13. The delayed sweep output to the horizontal mode control is observed by measuring the waveform at Q18 collector. Input is measured at the base of Q12. If the waveform is correct at Q12 base, but incorrect at the collector of Q12, check Q12 and associated circuitry. If there is an output at Q12, but not at Q18, check Q17 and the feedback loop through the timing switch and Q16 and Q15. Output to the main sweep is through Q9, Q10 and Q11. Delay gate and strobe gate output is from Q11. After locating the trouble and completing the repair, make adjustments in accordance with procedures in Chapter 6.

5-30. UNBLANKING AMPLIFIER TROUBLESHOOTING. The functional signal flow diagram for the unblanking amplifier is shown in figure 5-15. The maintenance schematic is figure 5-25. The unblanking amplifier is part of the horizontal output amplifier. Check output of amplifiers Q15, Q16 and Q17 at the collector of Q16. If no output, check input of summed input amplifier Q14 at the emitter of Q14. If there is an input at the emitter of Q14, but not at the collector of Q16 (or Q17), measure waveform at the collector of Q14. If there is an output at Q14 collector, check Q15 through Q17. If there is no output at the collector of Q14, check Q14. After locating the trouble and completing the repair, perform the adjustment procedures in accordance with the instructions in Chapter 6.

5-31. Control circuits and power distribution in the oscilloscope are grouped within each functional maintenance schematic. Power distribution is shown at the bottom of each schematic. Primary AC power is shown in the low voltage power supply maintenance schematic figure 5-28. Figure 5-30 is the interconnection diagram showing connections between the main frame and the horizontal section, and the main frame and the vertical section.

NOTES

Notes apply to fig 5-1.

1. CRT display after all initial turn-on procedures have been followed. See table 5-4.

2. Vertical output measured at A1A1A5Q7 emitter and A1A1A5Q8 emitter. Refer to figure 5-8 for waveforms and further localization of malfunction within the vertical section.

3. Horizontal output measured at A1A1A2Q7 and A1A1A2Q8 collectors and A1A1A2Q9 and A1A1A2Q10 collectors. See figure 5-14 for waveforms and further localization of trouble.

4. DC power which includes +15 vdc, -15 vdc, +100 vdc, +130 vdc, and unregulated +24 vdc. See figure 5-28 for test point locations and tolerances.

5. High voltage power to the CRT and the horizontal section. See figure 5-29 for test point locations and tolerances.

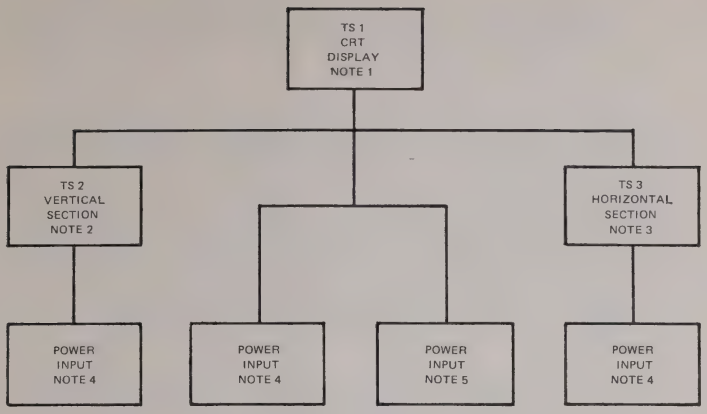

See notes page 5-8.

Figure 5-1. Overall Troubleshooting, Functional Dependency Diagram

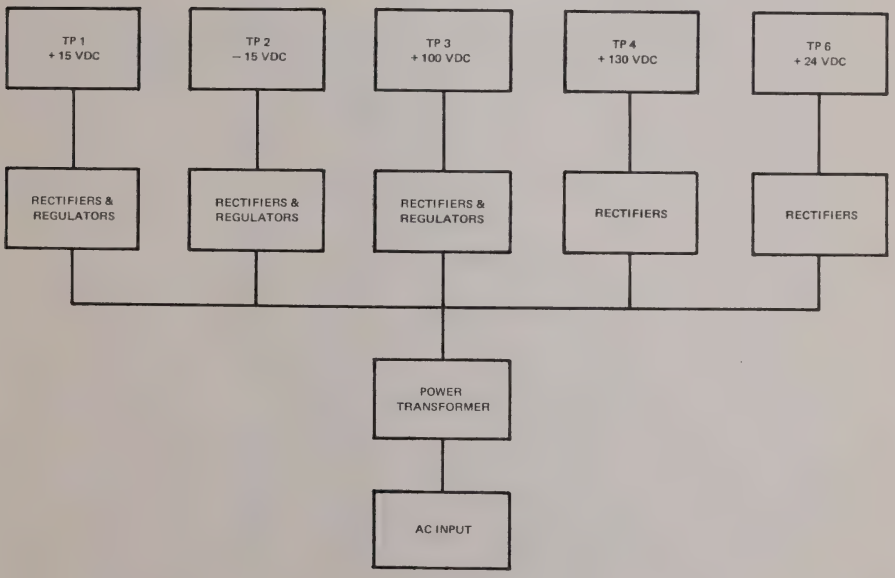

Figure 5-2. Low Voltage Power Supply Troubleshooting, Functional Dependency Diagram

NOTES

1. Output of A1A1A5Q7: Measure vertical output waveform at A1A1A5Q7 emitter. (TS1). Output of A1A1A5Q8 (TS2): Measure vertical output waveform at A1A1A5Q8 emitter. See specific notes on figure 5-8.

2. TS3 output of A2A6Q10 to delay line A2A4. Measure waveform at collector of A2A6Q10. Output of A2A6Q11, TS4, to delay line A2A4. Measure waveform at collector of A2A6Q11. See specific notes on figure 5-6.

3. Output of A2A6Q6 (TS11) to vertical amplifier and trigger preamplifier. Measure waveform at A2A6Q6 emitter. Output of A2A6Q7 (TS12) to vertical amplifier and trigger preamplifier. Measure waveform at A2A6Q7 emitter. See specific notes on figure 5-5.

4. Chopped blanking to Z axis amplifier, output of A2A3Q4 (TS15). Measure waveform at J1P15. See specific notes on figure 5-9.

5. Internal trigger to trigger input amplifiers, (TS21). Measure waveform at A2A3Q3 emitter. See specific notes on figure 5-7.

6. See figure 5-2.

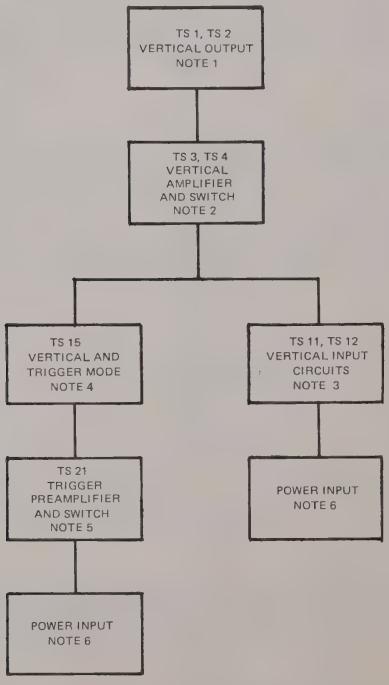

Figure 5-3. Vertical Section Troubleshooting, Functional Dependency Diagram

NOTES

1. Measure horizontal section outputs at TS24, output of A1A1A1A2Q7 and A1A1A1A2Q8 collectors to the right CRT deflection plate. TS25 measures output of A1A1A1A2Q9 and A1A1A1A2Q10 to the left CRT deflection plate. See specific notes on figure 5-14.

2. Measure main sweep output to horizontal output via the horizontal mode control. TS29 measured at A3A2Q20 collector. See specific notes on figure 5-11.

3. Measure comparator and pulse generator at A3A2Q4 collector (TS32) and main sweep trigger input amplifier output at A3A2Q3 collector (TS33). See specific notes on figure 5-10.

4. Measure all DC input power to horizontal circuits at TP1, TP2, TP3, TP4 and TP6 on low voltage power supply assembly A1A2A6A1. See figure 5-16.

5. Measure delayed sweep to horizontal output amplifier via horizontal mode control. TS35 measured at collector of A3A5Q18. See specific notes on figure 5-13.

6. Measure comparator and pulse generator at A3A5Q4 collector (TS37) and delayed sweep trigger input amplifier output at A3A5Q3 collector (TS38). See specific notes on figure 5-12.

7. Measure all DC power to horizontal circuits at TP1, TP2, TP3, TP4 and TP6 on low voltage power supply assembly A1A2A6A1. (TS39). See figure 5-15.

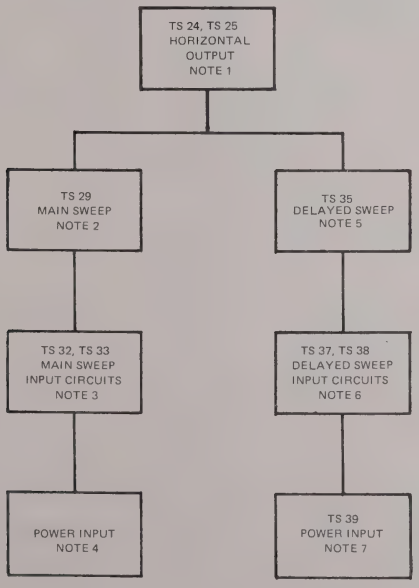

Figure 5-4. Horizontal Section Troubleshooting, Functional Dependency Diagram

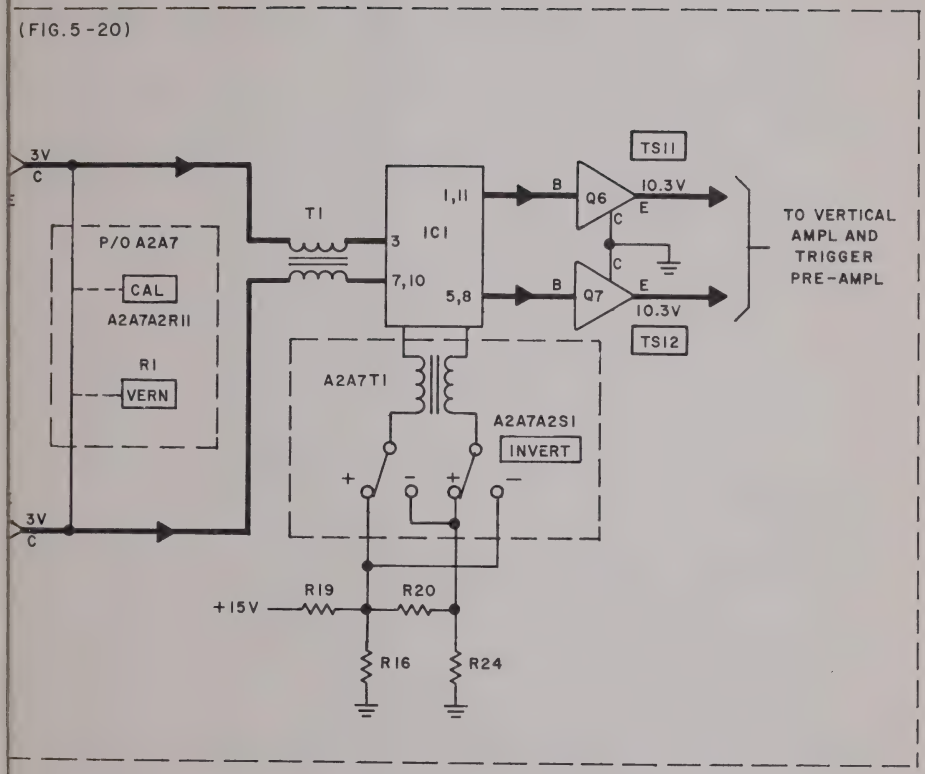

Figure 5-5. Vertical Input Circuits, Functional Signal Flow Diagram

TEST DATA

GENERAL NOTES

A. Voltage measured with no signal connected, VERTICAL MODE (36) set to ADD, POSITION (25) (37) control centered.

B. Unless otherwise indicated, waveform tolerances are ±10%.

C. If necessary refer to paragraph 5-20 for troubleshooting sequence and figure 5-19 and 5-20 for location of test points.

SPECIFIC NOTES

1. Make the following control settings:

CONTROL	POSITION
AC GND DC (29) (32)	DC
VOLTS/DIV Vernier (26) (35)	CAL
VOLTS/DIV (26) (35)	Push in
VERTICAL MODE/TRIG MODE (36)	ALT and DSPLY
VOLTS/DIV (26) (35)	.2
MAIN TRIG COUPLING (23)	AC
DLY'D TRIG COUPLING (14)	AC
MAIN TRIG SLOPE (22)	+
DLY'D TRIG SLOPE (13)	+
MAIN TRIG SOURCE (20)	INT
DLY'D TRIG SOURCE (11)	INT
TRIG AUTO SINGLE (18)	AUTO
HORIZ MODE SWITCH (16)	NORM
TIME/DIV Vernier (17)	CAL
HORIZ POSITION (6)	Push in
VERT GAIN X1 X5	X1

2. Test Steps:

Connect CAL IV (8) to INPUT (CH1) (31) and INPUT (CH2) (28) and adjust LEVEL-HOR GAIN/STABILITY (24) for stable trace on CRT. Trigger test oscilloscope with CAL 300 MV (10) signal.

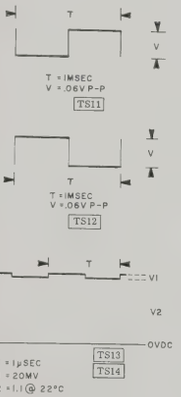

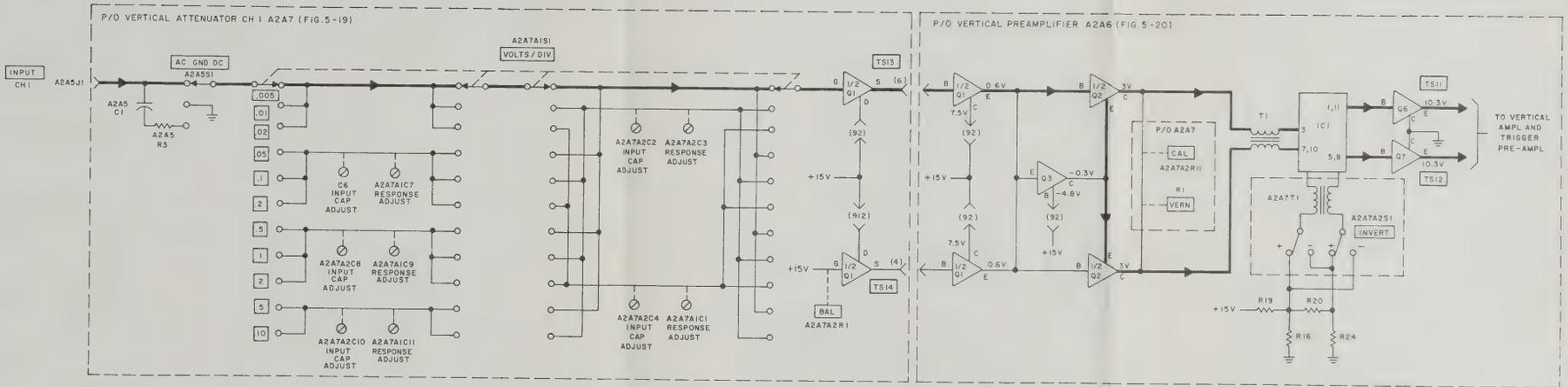

Figure 5-5. Vertical Input Circuits, Functional Signal Flow Diagram

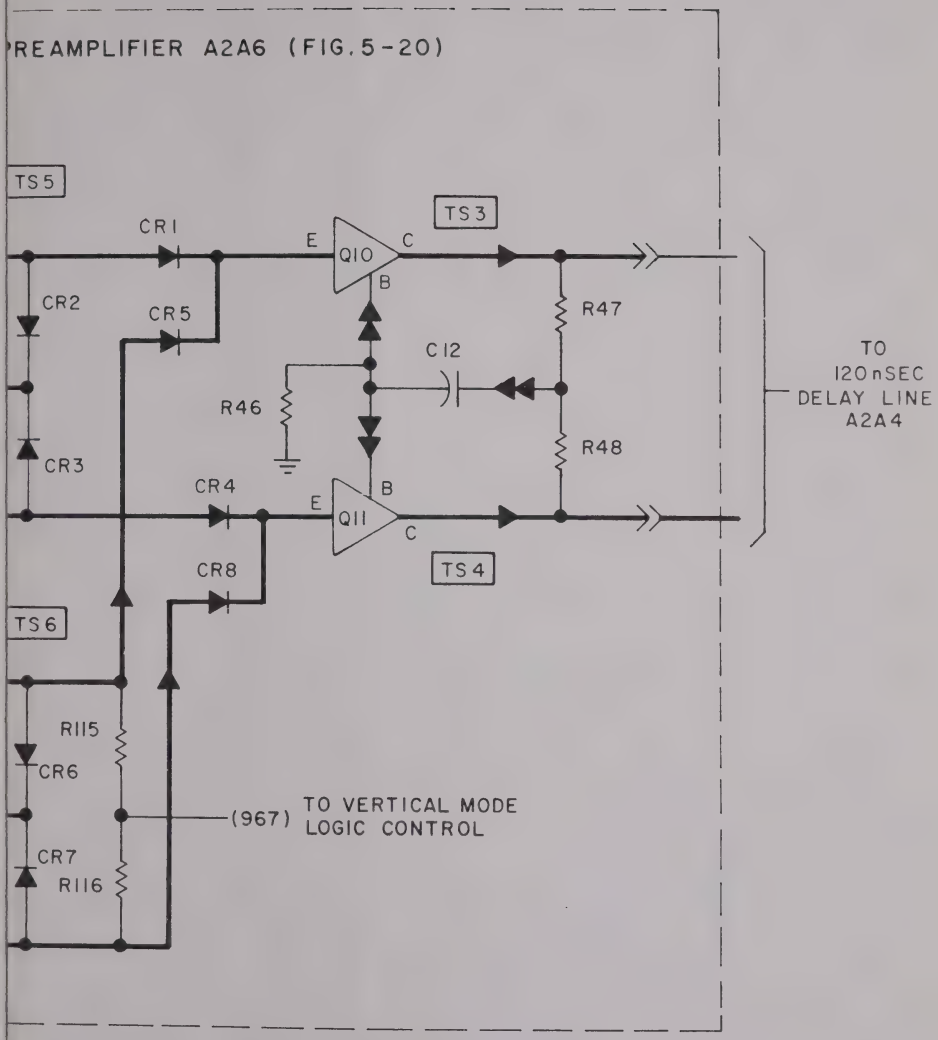

Figure 5-6. Vertical Amplifier and Switch, Functional Signal Flow Diagram

TEST DATA

GENERAL NOTES

A. Oscilloscope AN/USM-281 required.

B. Voltages measured with no signal connected, VERTICAL MODE TRIG MODE (36) to ADD, POSITION controls (25) (3) centered.

C. Unless otherwise indicated, waveform tolerances are ±10%.

D. If necessary refer to paragraph 5-21 for troubleshooting sequence and figure 5-20 for test point location.

SPECIFIC NOTES

1. Make the following control settings:

CONTROL	POSITION
AC GND DC (29) (32)	DC
VOLTS DIV Vernier (26) (35)	CAL
VOLTS DIV (26) (35)	Push in
VERTICAL MODE TRIG MODE (36)	ALT and DSPLY
VOLTS DIV (26) (35)	.2
MAIN TRIG COUPLING (23)	AC
DLY'D TRIG COUPLING (14)	AC
MAIN TRIG SLOPE (22)	-
DLY'D TRIG SLOPE (13)	-
MAIN TRIG SOURCE (20)	INT
DLY'D TRIG SOURCE (11)	INT
TRIG AUTO SINGLE (18)	AUTO
HORIZ MODE SWITCH (16)	NORM
TIME DIV Vernier (17)	CAL
HORIZ POSITION (6)	Push in
VERT GAIN X1 X5	X1

2. Test Steps:

TS3 Connect CAL IV (8) to INPUT (31) and INPUT (28) and adjust LEVEL-HOR GAIN/STABILITY for a TS4 stable trace on CRT. Trigger test oscilloscope with CAL (10) signal.

Adjust CH1 POSITION (37) and CH2 POSITION (25) until traces on CRT overlap.

Set VERTICAL MODE/TRIG MODE (36) to CHOP. Trigger test oscilloscope internally.

Set VERTICAL MODE/TRIG MODE (36) to CHOP. Trigger test oscilloscope internally.

TS5
TS6

T = 1.5μSEC ± 20%
V1 = 1.6V V3 = 12MV ±20%
V2 = 1.6V V4 = 12MV ±20%

TS3

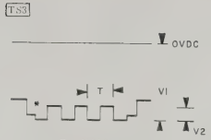

T = 1MSEC
V1 = .8V
V2 = .06V ±20%

TS4

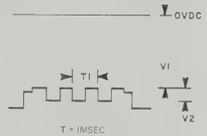

T = 1MSEC
V1 = .8V
V2 = .06V ± 20%

TS7
TS9

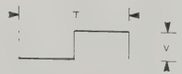

T = 1MSEC
V = .06V P-P

TS8
TS10

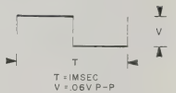

T = 1MSEC
V = .06V P-P

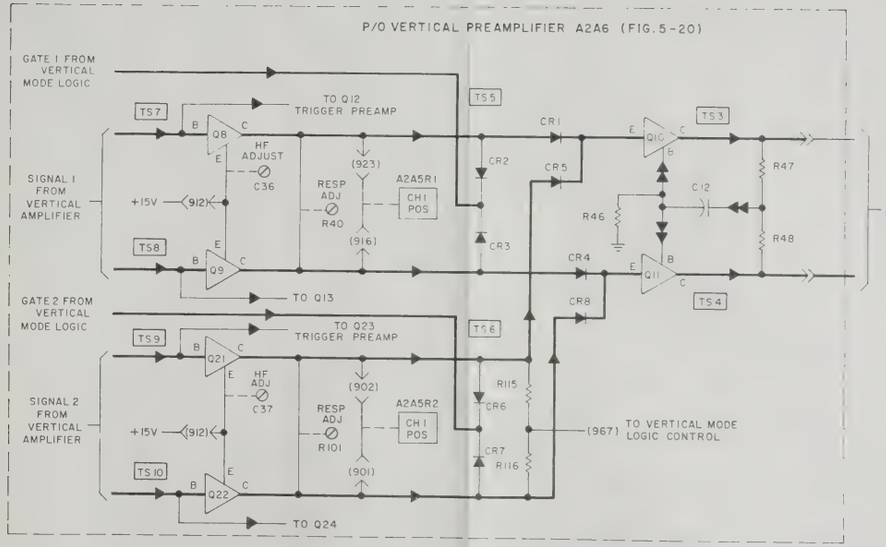

Figure 5-6. Vertical Amplifier and Switch, Functional Signal Flow Diagram

TEST

GENERAL

A. Oscilloscope AN/USM-281 req

B. Voltages measured with no sig
MODE/TRIG MODE (36) to AD
centered.

C. Unless otherwise indicated, w

D. If necessary refer to paragrap
sequence and figure 5-20 for t

SPECIFIC N

1. Make the following control set

CONTROL	
AC GND DC (29) (32)	
VOLTS/DIV Vernier (26) (35)	
VOLTS/DIV (26) (35)	
VERTICAL MODE/TRIG MODE (3	
VOLTS/DIV (26) (35)	
MAIN TRIG COUPLING (23)	
DLY'D TRIG COUPLING (14)	
MAIN TRIG SLOPE (22)	
DLY'D TRIG SLOPE (13)	
MAIN TRIG SOURCE (20)	
DLY'D TRIG SOURCE (11)	
TRIG AUTO SINGLE (18)	
HORIZ MODE SWITCH (16)	
TIME/DIV Vernier (17)	
HORIZ POSITION (6)	
VERT GAIN X1 X5	

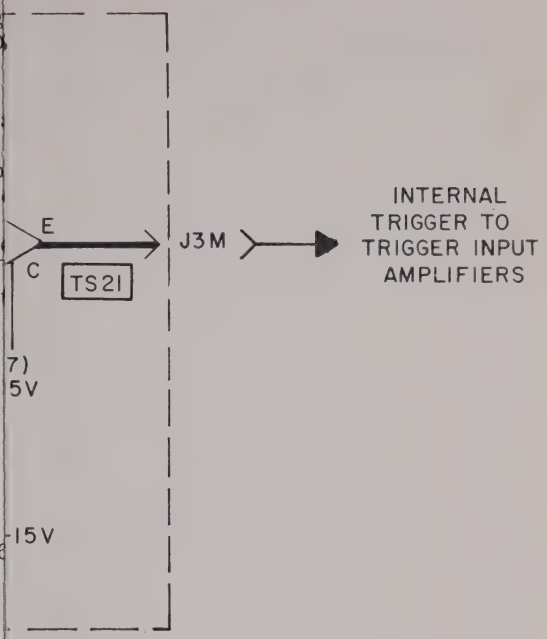

Figure 5-7. Trigger Pre-Amplifier and Switch, Functional Signal Flow Diagram

TEST DATA

GENERAL NOTES

A. Oscilloscope AN/USM-281 required.

B. Voltages measured with no signal connected, VERTICAL MODE/TRIG MODE (36) to ADD, POSITION (25) (37) controls centered.

C. Unless otherwise indicated, waveform tolerances are ±10%.

D. If necessary refer to paragraph 5-22 for troubleshooting sequence and figure 5-20 for test point locations.

SPECIFIC NOTES

1. Make the following control settings:

CONTROL	POSITION
AC GND DC (29) (32)	DC
VOLTS/DIV Vernier (26) (35)	CAL
VOLTS/DIV (26) (35)	Push in
VERTICAL MODE/TRIG MODE (36)	ALT and DSPLY
VOLTS/DIV (26) (35)	.2
MAIN TRIG COUPLING (23)	AC
DLY'D TRIG COUPLING (14)	AC
MAIN TRIG SLOPE (22)	+
DLY'D TRIG SLOPE (13)	+
MAIN TRIG SOURCE (20)	INT
DLY'D TRIG SOURCE (11)	INT
TRIG AUTO SINGLE (18)	AUTO
HORIZ MODE SWITCH (16)	NORM
TIME/DIV Vernier (17)	CAL
HORIZ POSITION (6)	Push in
VERT GAIN X1 X5	X1

2. Test Steps:

Connect CAL IV (8) to INPUT (31) and INPUT (28) and adjust LEVEL-HOR GAIN/STABILITY for stable trace on CRT. Trigger test oscilloscope with CAL 300 MV (10).

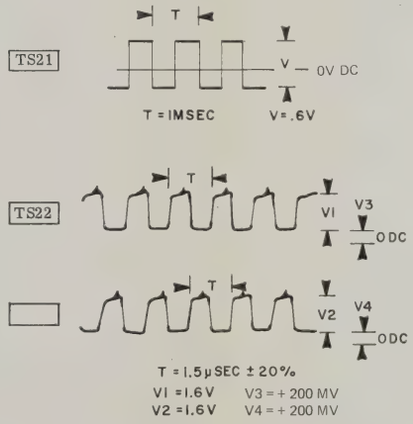

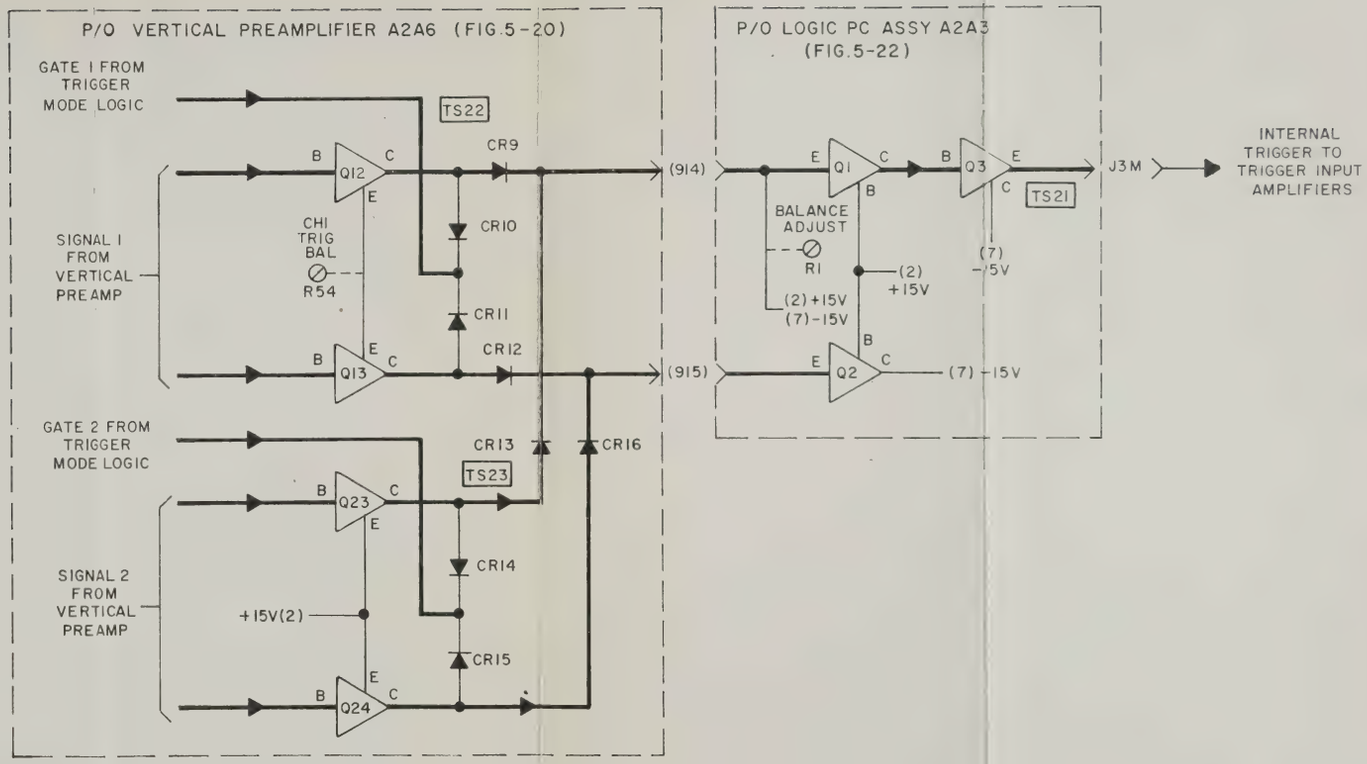

Figure 5-7. Trigger Pre-Amplifier and Switch, Functional Signal Flow Diagram

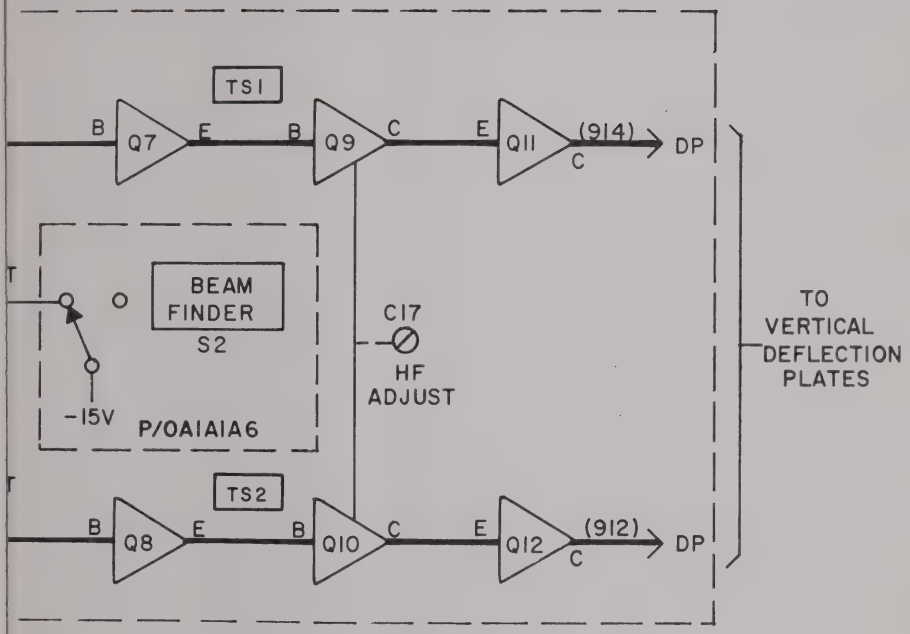

Figure 5-8. Vertical Output Amplifier, Functional Signal Flow Diagram

TEST DATA

GENERAL NOTES

A. Oscilloscope AN/USM-281 required.

B. Voltages measured with no signal, VERTICAL MODE/TRIG MODE (36) set to ADD, POSITION (25) (37) controls centered.

C. Unless otherwise indicated, waveform tolerances are ±10%.

D. If necessary refer to paragraph 5-23 for troubleshooting sequences, and figure 5-21 for test point location.

SPECIFIC NOTES

1. Make the following control settings:

CONTROL	POSITION
AC GND DC (29) (32)	DC
VOLTS/DIV Vernier (26) (35)	CAL
VOLTS/DIV (26) (35)	Push in
VERTICAL MODE/TRIG MODE (36)	ALT and DSPLY
VOLTS/DIV (26) (35)	.2
MAIN TRIG COUPLING (23)	AC
DLY'D TRIG COUPLING (14)	AC
MAIN TRIG SLOPE (22)	+
DLY'D TRIG SLOPE (13)	+
MAIN TRIG SOURCE (20)	INT
DLY'D TRIG SOURCE (11)	INT
TRIG AUTO SINGLE (18)	AUTO
HORIZ MODE SWITCH (16)	NORM
TIME/DIV Vernier (17)	CAL
HORIZ POSITION (6)	Push in
VERT GAIN X1 X5	X1

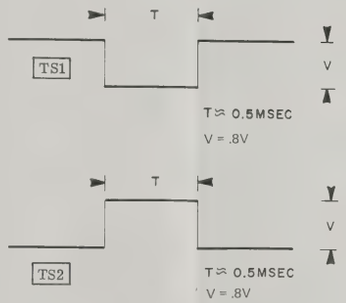

2. Test Steps:
Connect CAL IV (8) to INPUT (CH1) (31) and INPUT (CH2) (28) and adjust LEVEL-HOR GAIN/STABILITY for stable trace on CRT. Trigger test oscilloscope with CAL (10) signal.

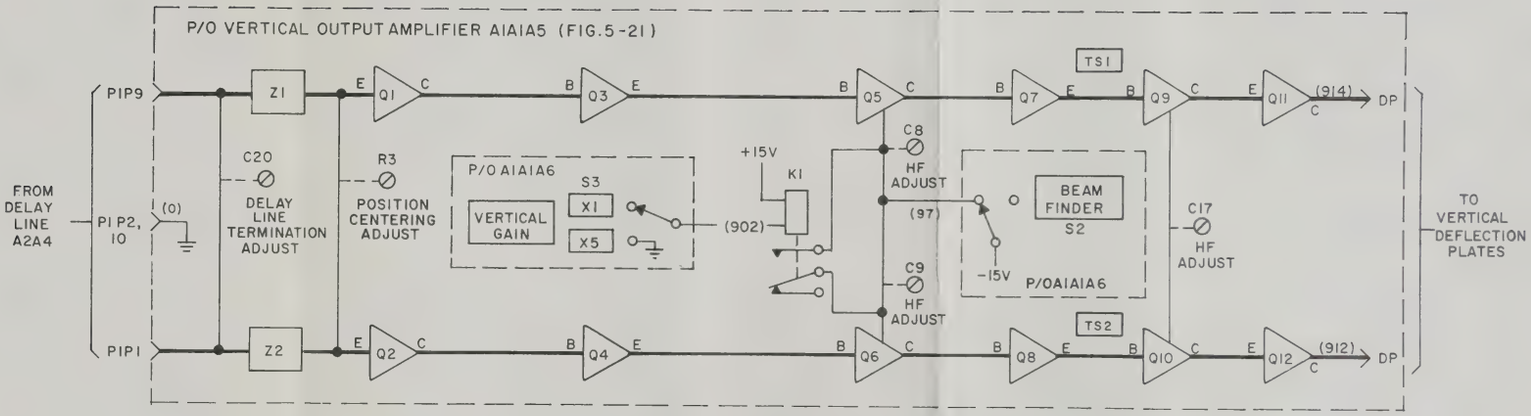

FOR USE ON AN/USM-281D CONFIGURATION ONLY. SEE FIGURE A-3 FOR AN/USM-281E CONFIGURATION.

Figure 5-8. Vertical Output Amplifier, Functional Signal Flow Diagram

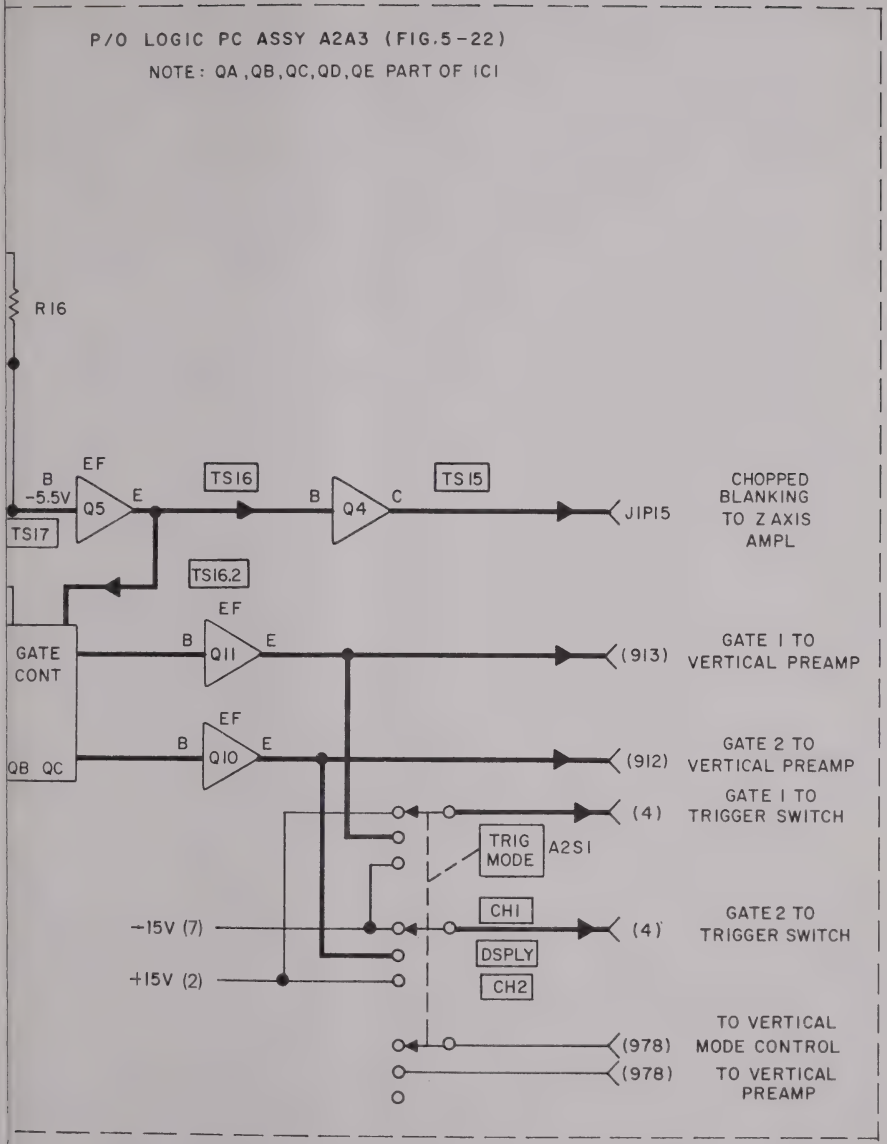

Figure 5-9. Vertical and Trigger Mode Logic, Functional Signal Flow Diagram

TEST DATA

GENERAL NOTES

A. Oscilloscope AN/USM-281 required.

B. Voltages measured with no signal, VERTICAL MODE/TRIG MODE (36) to ADD, POSITION (25) (37) controls centered.

C. Unless otherwise indicated, waveform tolerances are ±10%.

D. Voltages are ±5% except where two voltages are given, in this case voltages for VERTICAL MODE (36) CH1 and CH2 are ±10%.

E. If necessary refer to paragraph 5-24 for troubleshooting sequence and figures 5-22 for test point location.

SPECIFIC NOTES

1. Make the following control settings:

CONTROL	POSITION
AC GND DC (29) (32)	DC
VOLTS/DIV Vernier (26) (35)	CAL
VOLTS/DIV (26) (35)	Push in
VERTICAL MODE/TRIG MODE (36)	CHOP and DSPLY
VOLTS/DIV (26) (35)	.2
MAIN TRIG COUPLING (23)	AC
DLY'D TRIG COUPLING (14)	AC
MAIN TRIG SLOPE (22)	+
DLY'D TRIG SLOPE (13)	+
MAIN TRIG SOURCE (20)	INT
DLY'D TRIG SOURCE (11)	INT
TRIG AUTO SINGLE (18)	AUTO
HORIZ MODE SWITCH (16)	NORM
TIME/DIV Vernier (17)	CAL
HORIZ POSITION (6)	Push in
VERT GAIN X1 X5	X1

2. Test Steps:

Connect CAL IV (8) to INPUT (31) and INPUT (28) and adjust LEVEL-HOR GAIN/STABILITY for stable trace on CRT. Trigger test oscilloscope with CAL 300 MV(10). Set VERT MODE to chop SWEEP MODE to trigger

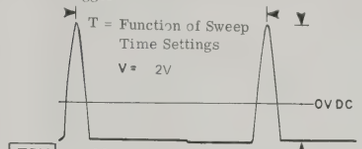

TS15 Measure at J1P15. Set VERTICAL MODE to ALT.

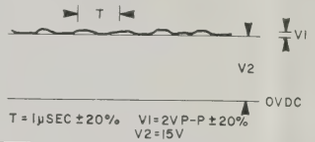

TS16 Set VERTICAL MODE/TRIG MODE (36) to CHOP. Measure at Q4 base.

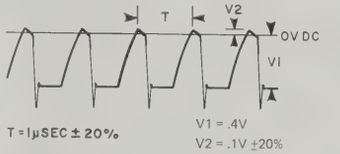

TS16.1 Set VERTICAL MODE/TRIG MODE (36) to CHOP. Measure at same point as TS15

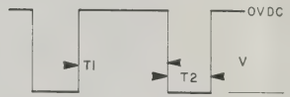

TS16.2 Set TIME/DIV (17) at 2 μsec and MAIN TRIG SOURCE (20) to EXT. Measure at Q5 emitter. Set VERTICAL MODE to ALT.

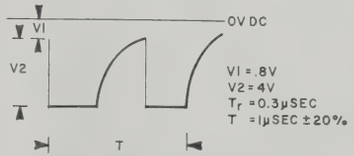

TS17 Measure at Q5 base

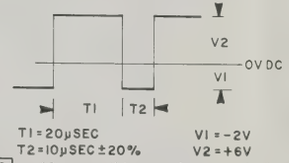

TS18 Measure this waveform at pin 6 of QA. Set TIME/ DIV (17) at 2 μsec and MAIN TRIG SOURCE (20) to EXT. Set VERTICAL MODE to ALT.

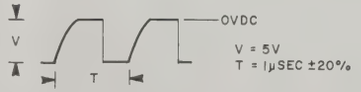

TS19 Measure at pin 14 of QE and pin 11 of QD.

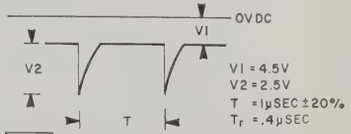

TS20 Measure at pin 12 of QE and pin 9 of QD.

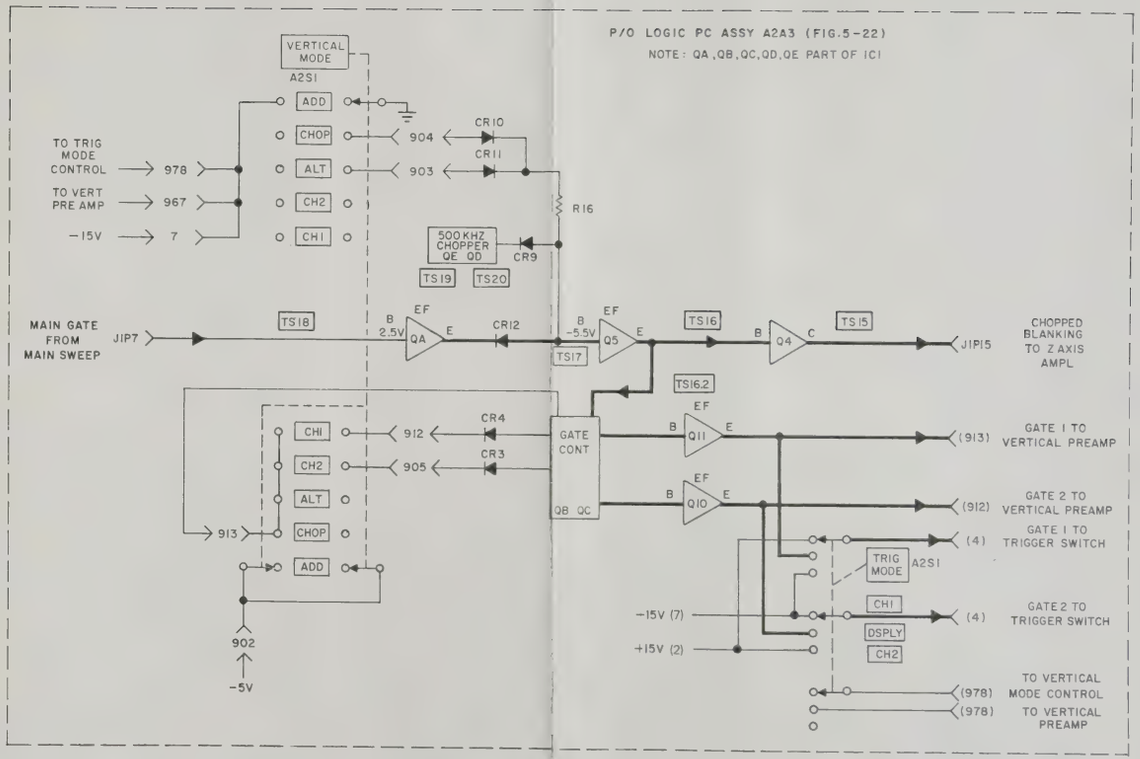

Figure 5-9. Vertical and Trigger Mode Logic, Functional Signal Flow Diagram

TE

GENE

A. Oscilloscope AN/USM-281

B. Voltages measured with no
STABILITY (24) centered,
SINGLE. Unless otherwise
ances are ±10%.

C. If necessary refer to paragr
quence and figure 5-23 for l

SPEC

1. Make the following control s

CONTROL

AC GND DC (29) (32)

VOLTS/DIV Vernier (26) (35)

VOLTS/DIV (26) (35)

VERTICAL MODE/TRIG MODE

VOLTS/DIV (26) (35)

MAIN TRIG COUPLING (23)

DLY'D TRIG COUPLING (14)

MAIN TRIG SLOPE (22)

DLY'D TRIG SLOPE (13)

MAIN TRIG SOURCE (20)

DLY'D TRIG SOURCE (11)

TRIG AUTO SINGLE (18)

HORIZ MODE SWITCH (16)

TIME/DIV Vernier (17)

HORIZ POSITION (6)

VERT GAIN X1 X5

TIME/DIV (17)

2. Test Steps:
Connect a 1 kHz, 12 volt pea
TRIG IN EXT HOR (21), also
from this signal.

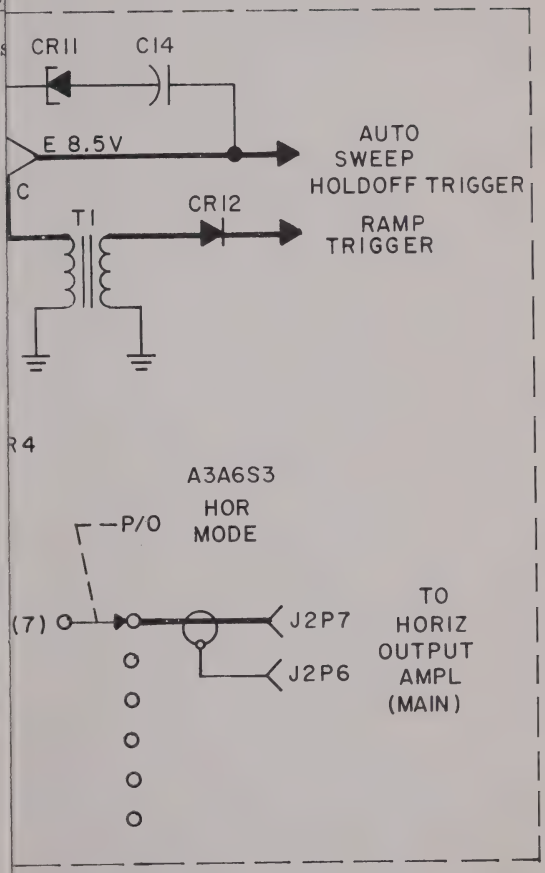

Figure 5-10. Main Sweep and Trigger Input Amplifier, Comparator and Pulse Generator, Functional Signal Flow Diagram

TEST DATA

GENERAL NOTES

A. Oscilloscope AN/USM-281 required.

B. Voltages measured with no signal, LEVEL-HOR GAIN/ STABILITY (24) centered, TRIG AUTO SINGLE set at SINGLE. Unless otherwise indicated, waveform tolerances are ±10%.

C. If necessary refer to paragraph 5-25 for troubleshooting sequence and figure 5-23 for location of test points.

SPECIFIC NOTES

1. Make the following control settings:

CONTROL	POSITION
AC GND DC (29) (32)	DC
VOLTS/DIV Vernier (26) (35)	CAL
VOLTS/DIV (26) (35)	Push in
VERTICAL MODE/TRIG MODE (36)	ALT and DSPLY
VOLTS/DIV (26) (35)	.2
MAIN TRIG COUPLING (23)	AC
DLY'D TRIG COUPLING (14)	AC
MAIN TRIG SLOPE (22)	+
DLY'D TRIG SLOPE (13)	+
MAIN TRIG SOURCE (20)	EXT/10
DLY'D TRIG SOURCE (11)	EXT/10
TRIG AUTO SINGLE (18)	TRIG
HORIZ MODE SWITCH (16)	NORM
TIME/DIV Vernier (17)	CAL
HORIZ POSITION (6)	Push in
VERT GAIN X1 X5	X1
TIME/DIV (17)	50 μsec

TS32

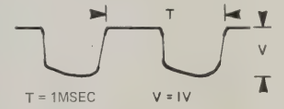

TS33

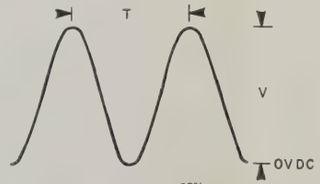

2. Test Steps:
Connect a 1 kHz, 12 volt peak-to-peak sine wave to TRIG IN EXT HOR (21), also trigger test oscilloscope from this signal.

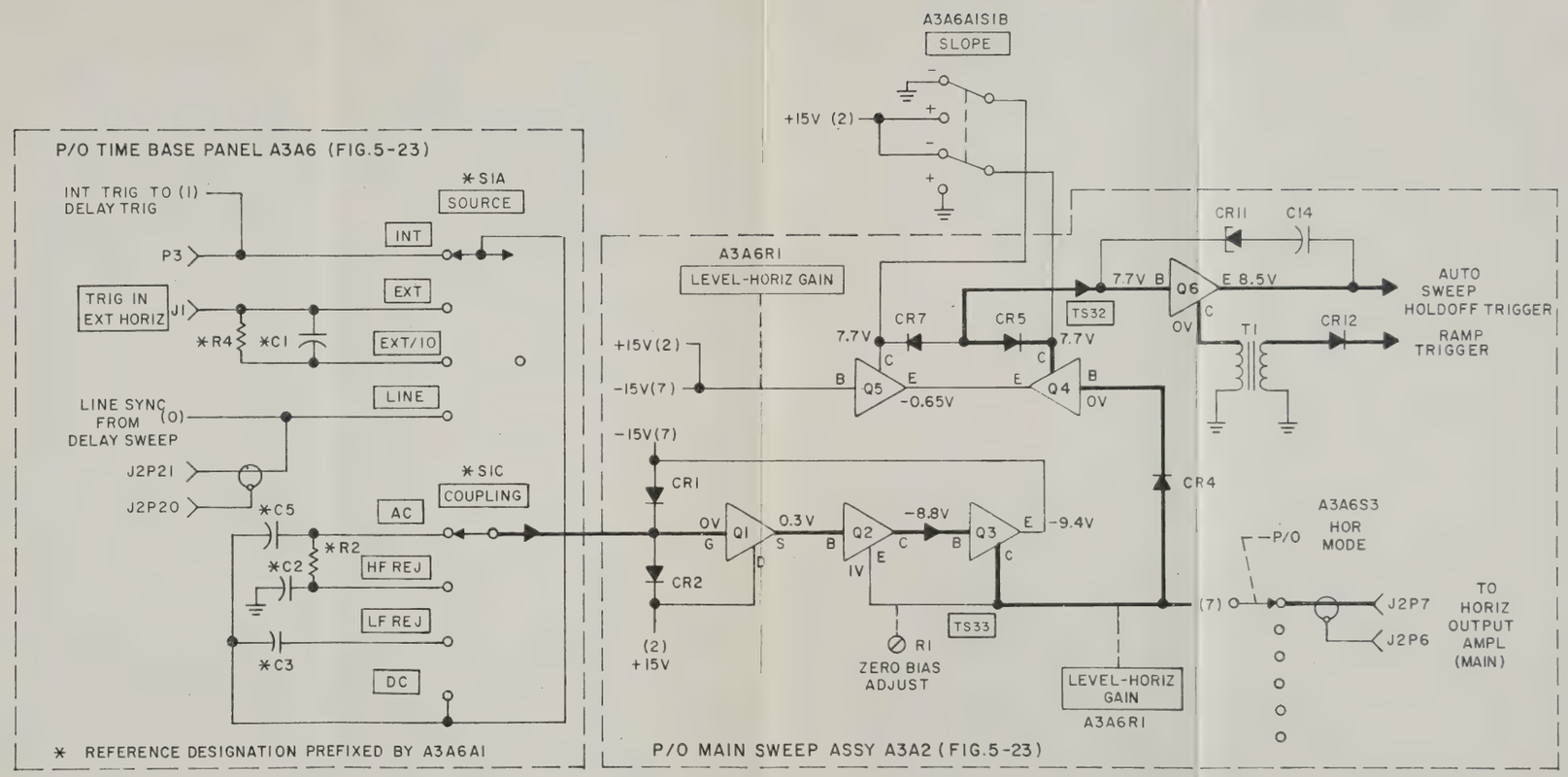

FOR USE ON AN/USM-281D CONFIGURATION ONLY. SEE FIGURE A-4 FOR AN/USM-281E CONFIGURATION.

Figure 5-10. Main Sweep and Trigger Input Amplifier, Comparator and Pulse Generator, Functional Signal Flow Diagram

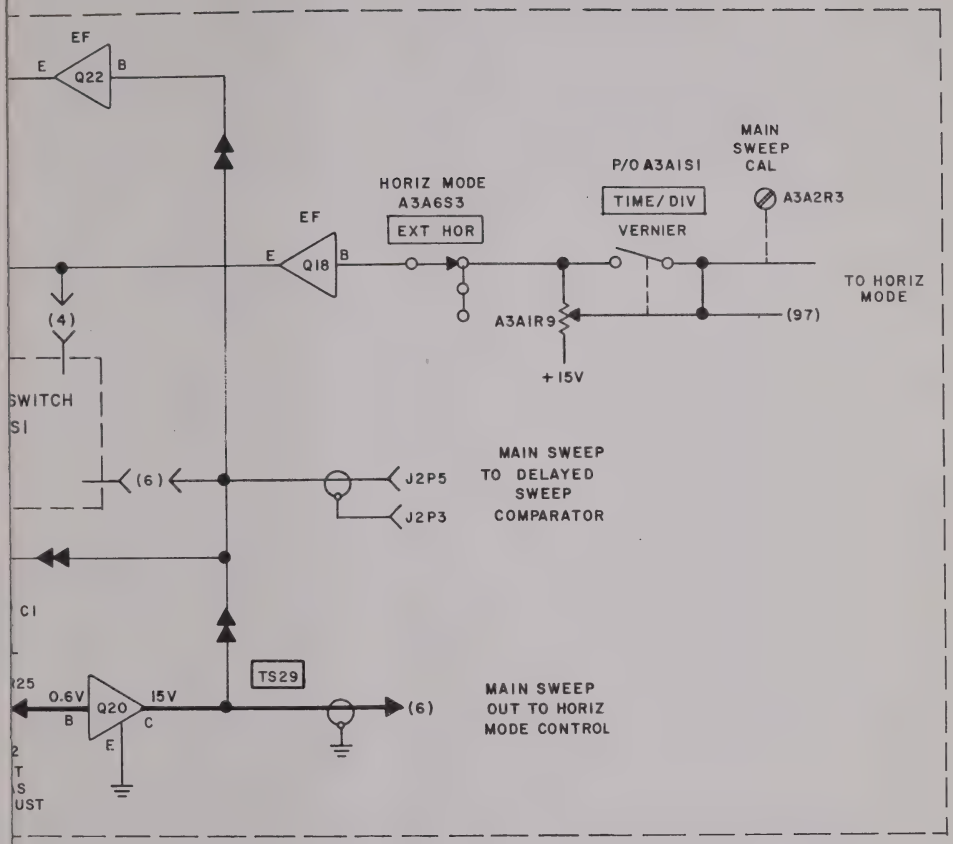

Figure 5-11. Main Sweep Ramp Generator, Functional Signal Flow Diagram

TEST DATA

GENERAL NOTES

A. Oscilloscope AN/USM-281 required.

B. Voltages measured with no signal, LEVEL-HOR GAIN/STABILITY (24) centered, TRIG AUTO SINGLE at SINGLE. Unless otherwise indicated, waveform tolerances are ±10%.

C. Voltages in Figure 5-11 are when REARM (19) is depressed.

D. If necessary refer to paragraph 5-26 for troubleshooting sequence and figure 5-23 for test point location.

SPECIFIC NOTES

1. Make the following control settings:

CONTROL	POSITION
AC GND DC (29) (32)	DC
VOLTS/DIV Vernier (26) (35)	CAL
VOLTS DIV (26) (35)	Push in
VERTICAL MODE TRIG MODE (36)	ALT and DSPLY
VOLTS DIV (26) (35)	.2
MAIN TRIG COUPLING (23)	AC
MAIN TRIG SLOPE (22)	+
MAIN TRIG SOURCE (20)	EXT/10
TRIG AUTO SINGLE (18)	TRIG
HORIZ MODE SWITCH (16)	NORM
TIME DIV Vernier (17)	CAL
HORIZ POSITION (6)	Push in
VERT GAIN X1 X5	X1
TIME/DIV (17)	50 µsec

2. Test Steps:

Connect a 1 kHz, 12 volt peak-to-peak sine wave to TRIG IN EXT HOR (21), also trigger test oscilloscope from this signal.

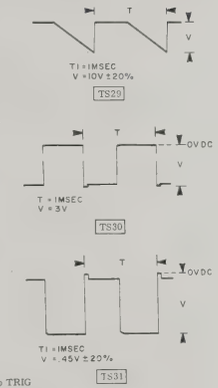

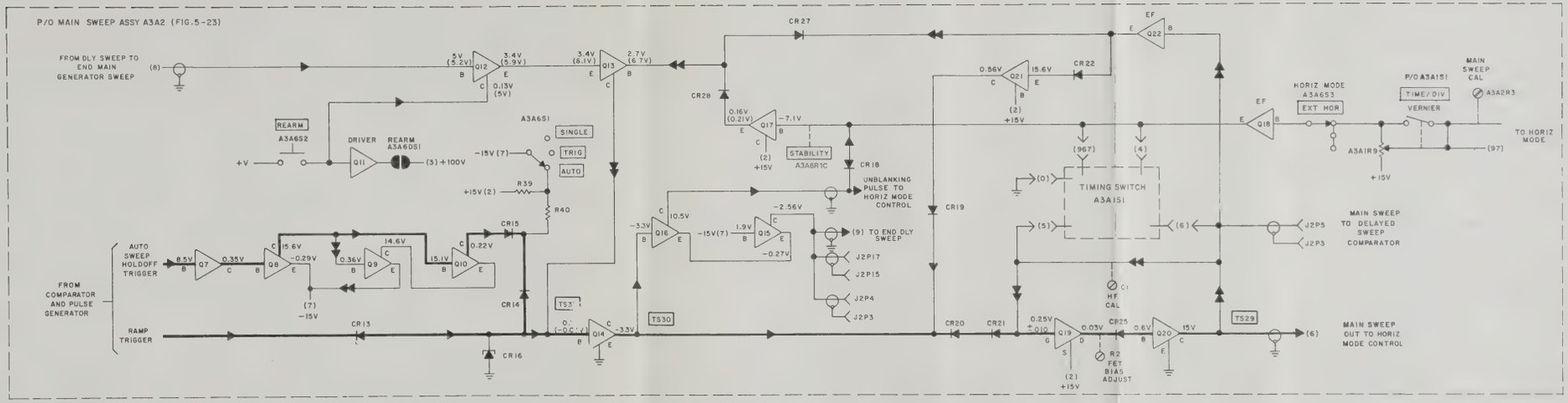

Figure 5-11. Main Sweep Ramp Generator, Functional Signal Flow Diagram

TES

GENE

A. Oscilloscope AN/USM-281

B. Voltages measured with no
STABILITY (24) centered,
SINGLE. Unless otherwise
are ±10%.

C. If necessary refer to parag
sequence and figure 5-24 fo

SPECI

1. Make the following control

CONTROL

AC GND DC (29) (32)

VOLTS/DIV Vernier (26) (35)

VOLTS/DIV (26) (35)

VERTICAL MODE/TRIG MODE

VOLTS/DIV (26) (35)

DLY'D TRIG COUPLING (14)

DLY'D TRIG SLOPE (13)

DLY'D TRIG SOURCE (11)

TRIG AUTO SINGLE (18)

HORIZ MODE SWITCH (16)

TIME/DIV Vernier (17)

HORIZ POSITION (6)

VERT GAIN X1 X5 (4)

TIME/DIV (17)

DELAY VERNIER (9)

LEVEL (15)

2. Test Steps:

Connect a 1 kHz, 12 volt pe
TRIG IN EXT HOR (21), als
from this signal.

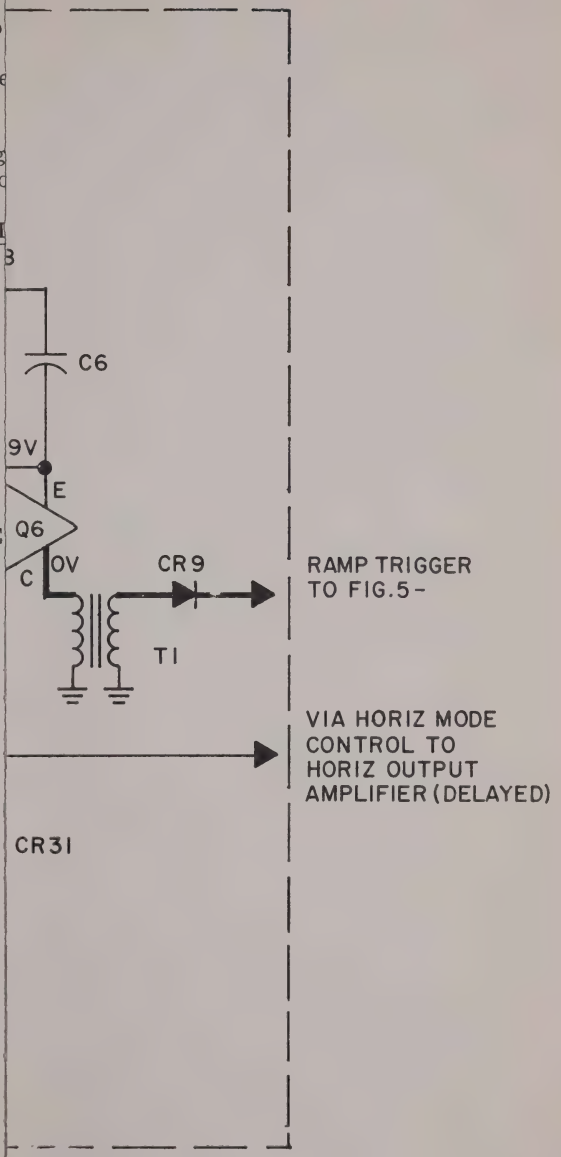

Figure 5-12. Delayed Sweep Trigger Input Amplifier, Comparator and Pulse Generator, Functional Signal Flow Diagram

TEST DATA

GENERAL NOTES

A. Oscilloscope AN/USM-281 required.

B. Voltages measured with no signal LEVEL-HOR GAIN/ STABILITY (24) centered, TRIG AUTO SINGLE (18) at SINGLE. Unless otherwise indicated, waveform tolerances are ±10%.

C. If necessary refer to paragraph 5-28 for troubleshooting sequence and figure 5-24 for test point location.

SPECIFIC NOTES

1. Make the following control settings:

CONTROL	POSITION
AC GND DC (29) (32)	DC
VOLTS/DIV Vernier (26) (35)	CAL
VOLTS/DIV (26) (35)	Push in
VERTICAL MODE/TRIG MODE (36)	ALT and DSPLY
VOLTS/DIV (26) (35)	.2
DLY'D TRIG COUPLING (14)	AC
DLY'D TRIG SLOPE (13)	+
DLY'D TRIG SOURCE (11)	EXT/10
TRIG AUTO SINGLE (18)	TRIG
HORIZ MODE SWITCH (16)	DLY'D
TIME/DIV Vernier (17)	CAL
HORIZ POSITION (6)	Push in
VERT GAIN X1 X5 (4)	X1
TIME/DIV (17)	50 μsec
DELAY VERNIER (9)	1
LEVEL (15)	0

TS37

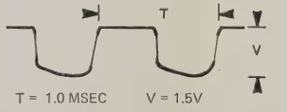

TS38

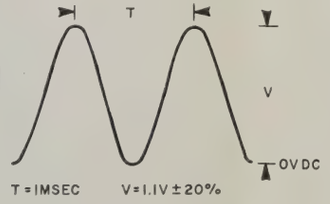

2. Test Steps:

Connect a 1 kHz, 12 volt peak-to-peak sine wave to TRIG IN EXT HOR (21), also trigger test oscilloscope from this signal.

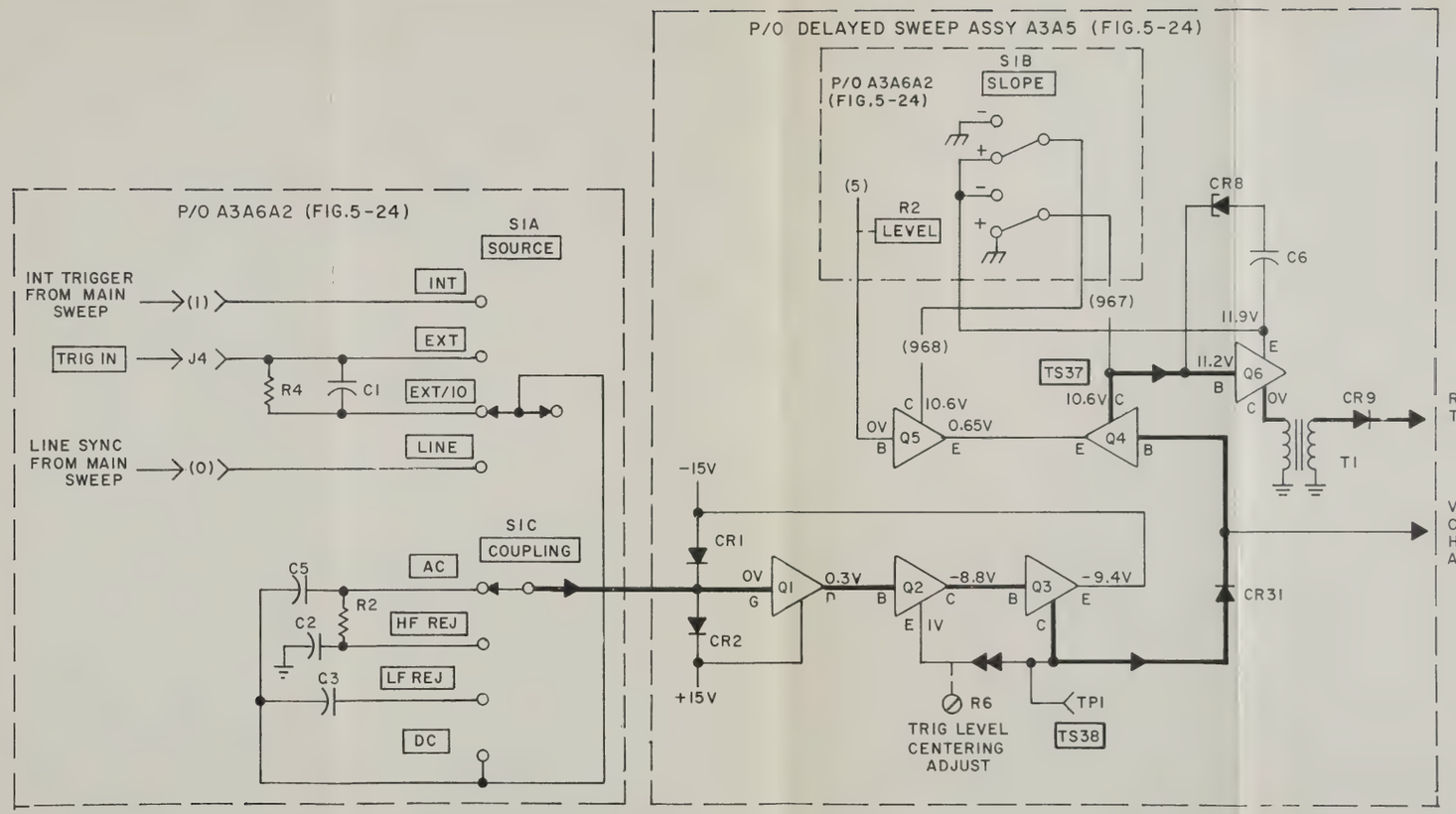

FOR USE ON AN/USM-281D CONFIGURATION ONLY. SEE FIGURE A-5 FOR AN/USM-281E CONFIGURATION.

Figure 5-12. Delayed Sweep Trigger Input Amplifier, Comparator and Pulse Generator, Functional Signal Flow Diagram

C

A. Oscilloscope AN/US

B. Voltages measured
STABILITY (24) cer
SINGLE. Unless ot
are ±10%.

C. If necessary refer t
sequence, and figur

SPE

1. Make the following

CONTROL

AC GND DC (29) (32)

VOLTS/DIV Vernier (26)

VOLTS/DIV (26) (35)

VERTICAL MODE/TRIG

VOLTS/DIV (26) (35)

MAIN TRIG COUPLING

DLY'D TRIG COUPLING

MAIN TRIG SLOPE (22)

DLY'D TRIG SLOPE (13)

MAIN TRIG SOURCE (20)

DLY'D TRIG SOURCE (1

TRIG AUTO SINGLE (18)

HORIZ MODE SWITCH (

TIME/DIV Vernier (17)

HORIZ POSITION (6)

VERT GAIN X1 X5

2. Test Steps:

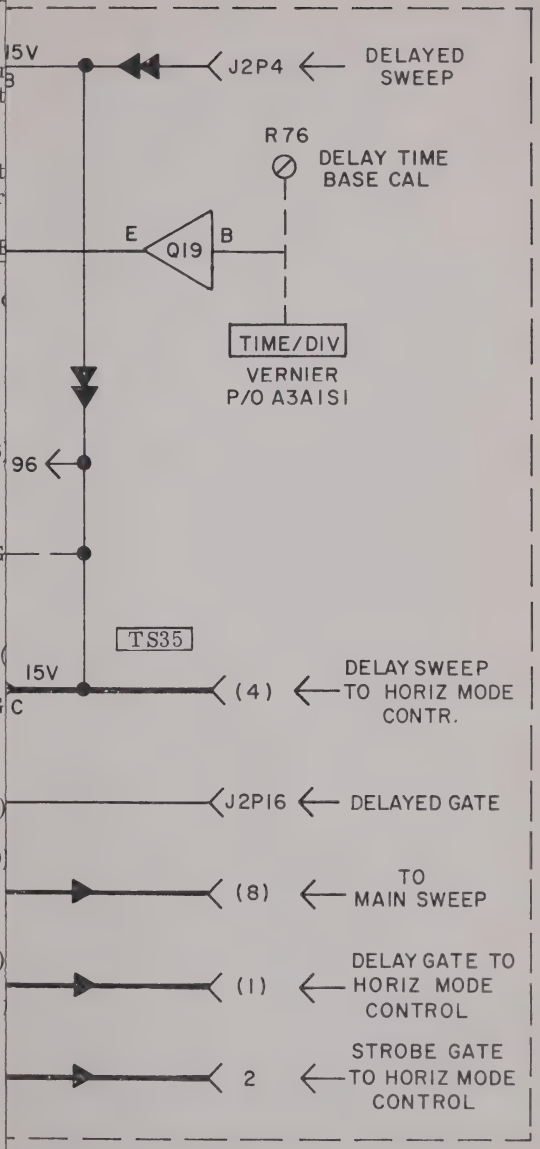

Figure 5-13. Delayed Sweep Ramp Generator, Functional Signal Flow Diagram

TEST DATA

GENERAL NOTES

A. Oscilloscope AN/USM-281 required.

B. Voltages measured with no signal LEVEL-HOR GAIN/ STABILITY (24) centered, TRIG AUTO SINGLE (18) at SINGLE. Unless otherwise indicated, waveform tolerances are ±10%.

C. If necessary refer to paragraph 5-29 for troubleshooting sequence, and figure 5-24 for test point locations.

SPECIFIC NOTES

1. Make the following control settings:

CONTROL	POSITION
AC GND DC (29) (32)	DC
VOLTS/DIV Vernier (26) (35)	CAL
VOLTS/DIV (26) (35)	Push in
VERTICAL MODE/TRIG MODE (36)	ALT and DSPLY
VOLTS/DIV (26) (35)	.2
MAIN TRIG COUPLING (23)	AC
DLY'D TRIG COUPLING (14)	AC
MAIN TRIG SLOPE (22)	+
DLY'D TRIG SLOPE (13)	+
MAIN TRIG SOURCE (20)	INT
DLY'D TRIG SOURCE (11)	INT
TRIG AUTO SINGLE (18)	AUTO
HORIZ MODE SWITCH (16)	DLY'D
TIME/DIV Vernier (17)	CAL
HORIZ POSITION (6)	Push in
VERT GAIN X1 X5	X1

2. Test Steps:

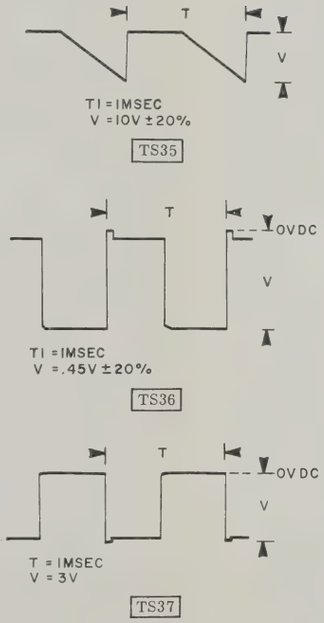

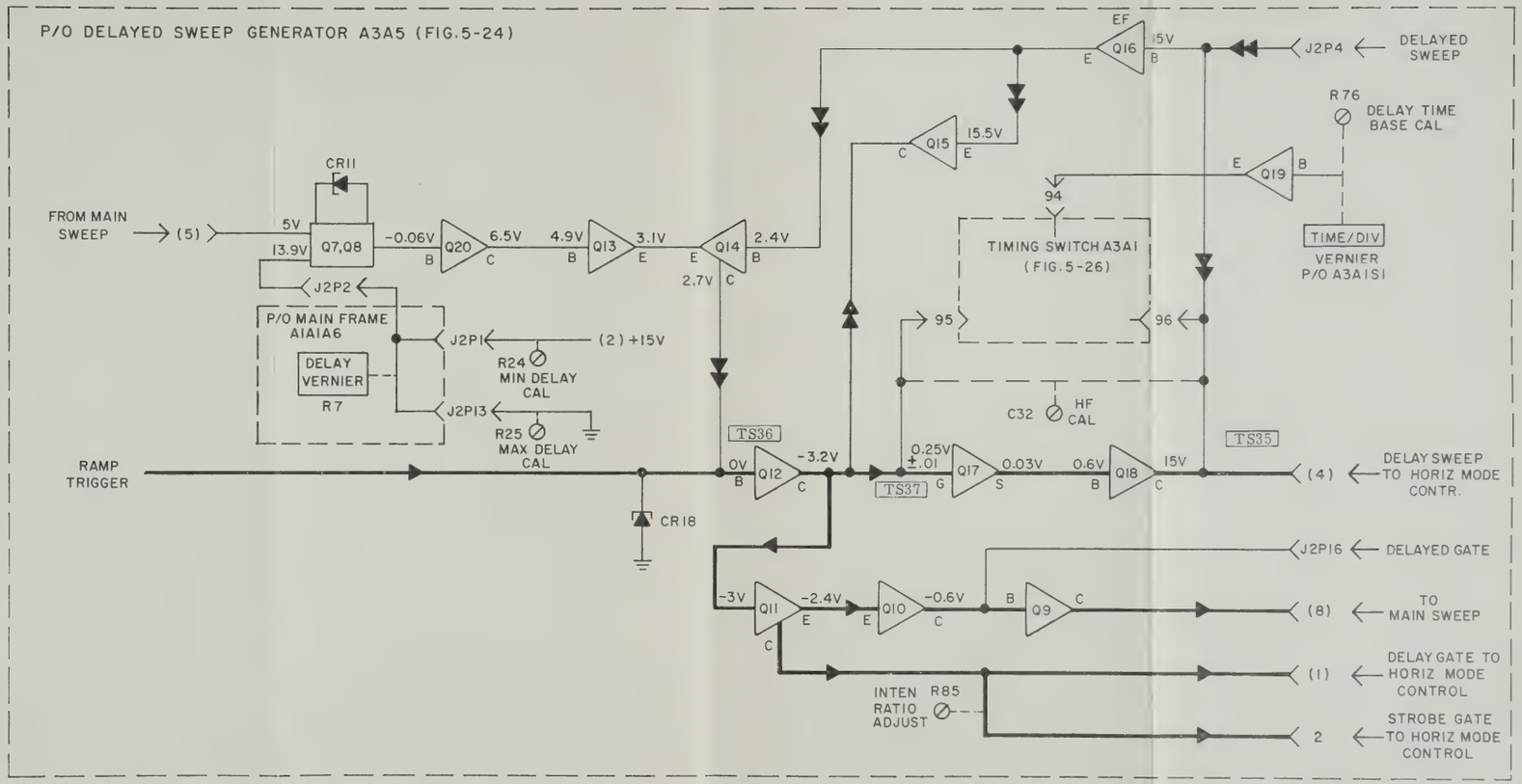

Figure 5-13. Delayed Sweep Ramp Generator, Functional Signal Flow Diagram

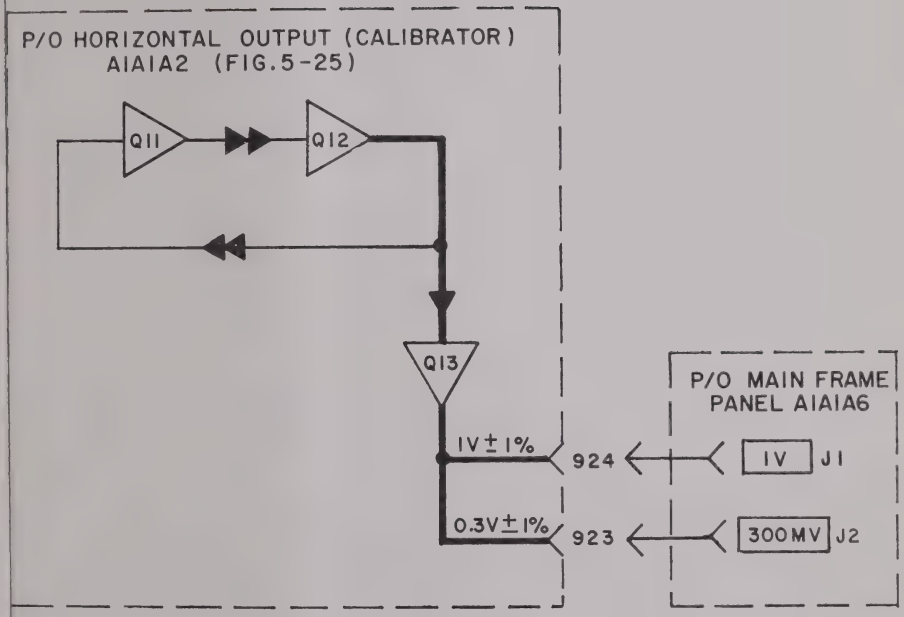

Figure 5-14. Horizontal Output Amplifier, Functional Signal Flow Diagram

TEST DATA

GENERAL NOTES

A. Oscilloscope AN/USM-281 required.

B. Voltages measured with no signal, LEVEL-HOR GAIN STABILITY (24) centered, TRIG AUTO SINGLE (18) at SINGLE. Unless otherwise indicated, transformer tolerances are ±10%.

C. If necessary refer to paragraph 5-27 for troubleshooting sequence and figure 5-25 for test point locations.

SPECIFIC NOTES

1. Make the following control settings:

CONTROL	POSITION
AC GND DC (29) (32)	DC
VOLTS/DIV Vernier (26) (35)	CAL
VOLTS DIV (26) (35)	Push in
VERTICAL MODE/TRIG MODE (36)	ALT and DSPLY
VOLTS/DIV (26) (35)	.1
MAIN TRIG COUPLING (23)	AC
DLY'D TRIG COUPLING (14)	AC
MAIN TRIG SLOPE (22)	+
DLY'D TRIG SLOPE (13)	+
MAIN TRIG SOURCE (20)	EXT/10
DLY'D TRIG SOURCE (11)	EXT/10
TRIG AUTO SINGLE (18)	TRIG
HORIZ MODE SWITCH (16)	NORM
TIME/DIV Vernier (17)	CAL
HORIZ POSITION (6)	Push in
TIME/DIV (17)	50 μsec

2. Test Steps:
Connect a 1 kHz, 12 volt peak-to-peak sine wave to TRIG IN EXT HOR (21); also trigger test oscilloscope from this signal.

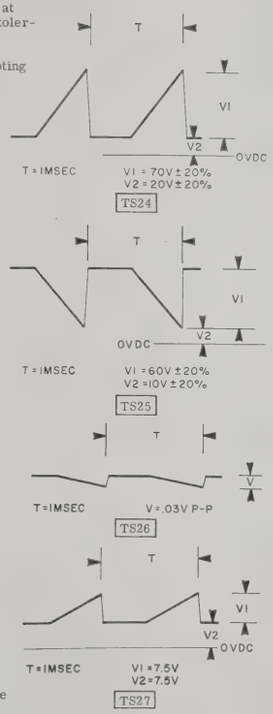

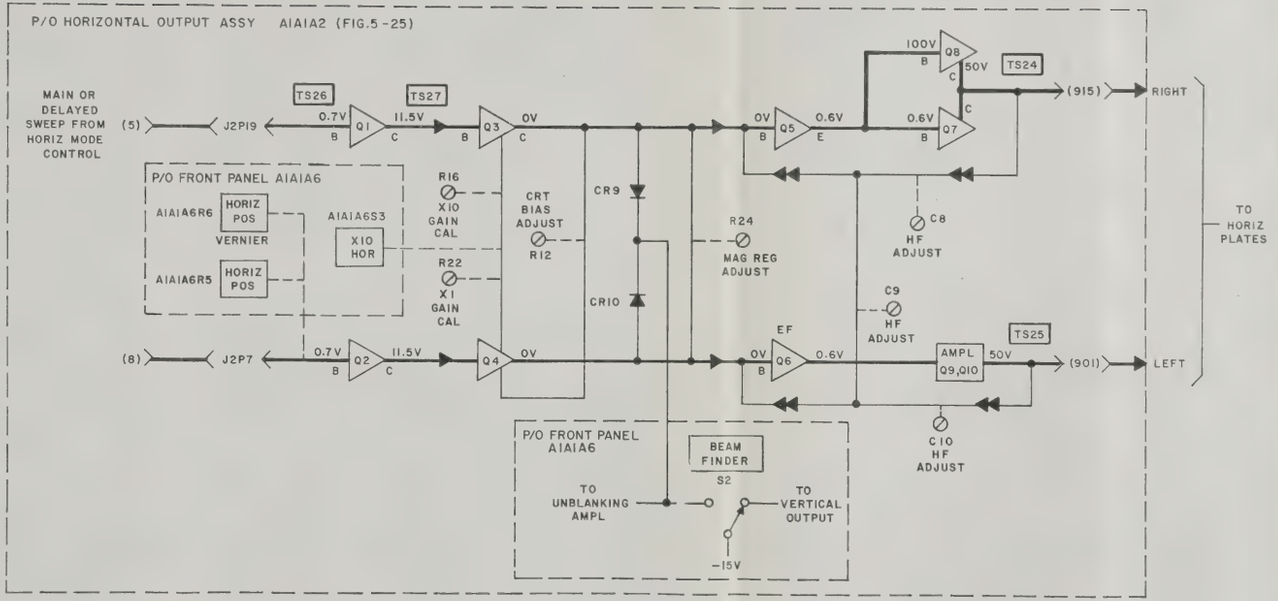

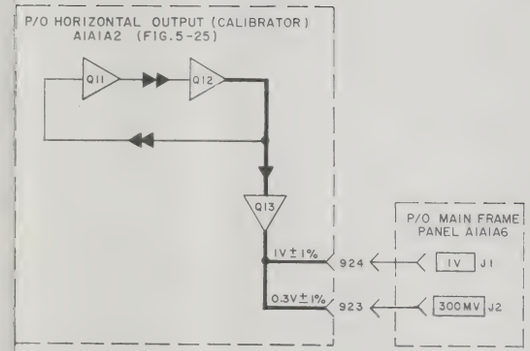

Figure 5-14. Horizontal Output Amplifier, Functional Signal Flow Diagram

G

A. Oscilloscope AN/USM

B. Voltages measured wi
STABILITY (24) cente
at SINGLE.

C. Unless otherwise indic

D. Waveforms depend on

E. If necessary refer to p
sequence, and figure 5

S

1. Set front panel control

CONTROL

AC GND DC (29) (32)

VOLTS/DIV Vernier (26) (

VOLTS/DIV invert (26) (35

VERTICAL MODE/TRIG M

VOLTS/DIV (26) (35)

VERTICAL MODE/TRIG M

MAIN TRIG COUPLING (23

DLY'D TRIG COUPLING (1

MAIN TRIG SLOPE (22)

DLY'D TRIG SLOPE (13)

MAIN TRIG SOURCE (20)

DLY'D TRIG SOURCE (11)

TRIG AUTO SINGLE (18)

HORIZ MODE SWITCH (16

TIME/DIV VERNIER (17)

HORIZ POSITION (6)

VERT GAIN X1 X5

TIME/DIV (17)

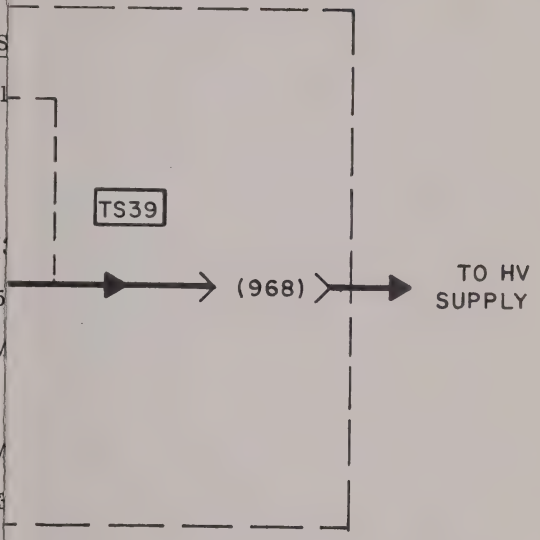

Figure 5-15. Unblanking Amplifier, Functional Signal Flow Diagram

TEST DATA

GENERAL NOTES

A. Oscilloscope AN/USM-281 required.

B. Voltages measured with no signal, LEVEL-HOR GAIN/ STABILITY (24) centered, TRIG AUTO SINGLE (18) set at SINGLE.

C. Unless otherwise indicated, waveform tolerances are ±10%.

D. Waveforms depend on INTENSITY setting.

E. If necessary refer to paragraph 5-30 for troubleshooting sequence, and figure 5-25 for test point location.

SPECIFIC NOTES

1. Set front panel controls as follows:

CONTROL	POSITION
AC GND DC (29) (32)	DC
VOLTS/DIV Vernier (26) (35)	CAL
VOLTS/DIV invert (26) (35)	Push in
VERTICAL MODE/TRIG MODE (36)	ALT
VOLTS/DIV (26) (35)	.2
VERTICAL MODE/TRIG MODE (36)	DSPLY
MAIN TRIG COUPLING (23)	AC
DLY'D TRIG COUPLING (14)	AC
MAIN TRIG SLOPE (22)	+
DLY'D TRIG SLOPE (13)	+
MAIN TRIG SOURCE (20)	EXT/10
DLY'D TRIG SOURCE (11)	EXT/10
TRIG AUTO SINGLE (18)	TRIG
HORIZ MODE SWITCH (16)	NORM
TIME/DIV VERNIER (17)	CAL
HORIZ POSITION (6)	Push in
VERT GAIN X1 X5	X1
TIME/DIV (17)	50 μsec

2. Test Steps:

Connect a 1 kHz, 12 volt peak-to-peak sine wave to TRIG IN EXT HOR (21); also trigger test oscilloscope from this signal.

TS39

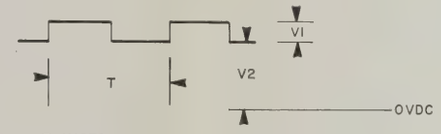

T=1MSEC
V1 = WILL VARY 20 to 60V WITH INTENSITY LEVEL (3)
V2 = +15V

TS40

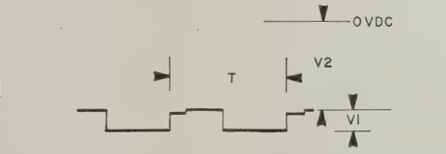

T=1MSEC V1=0.18V±20%
V2=0.6V±20%

TS41

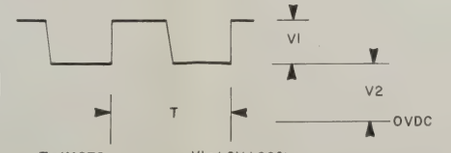

T=1MSEC V1=1.0V±20%
V2=.8V±20%

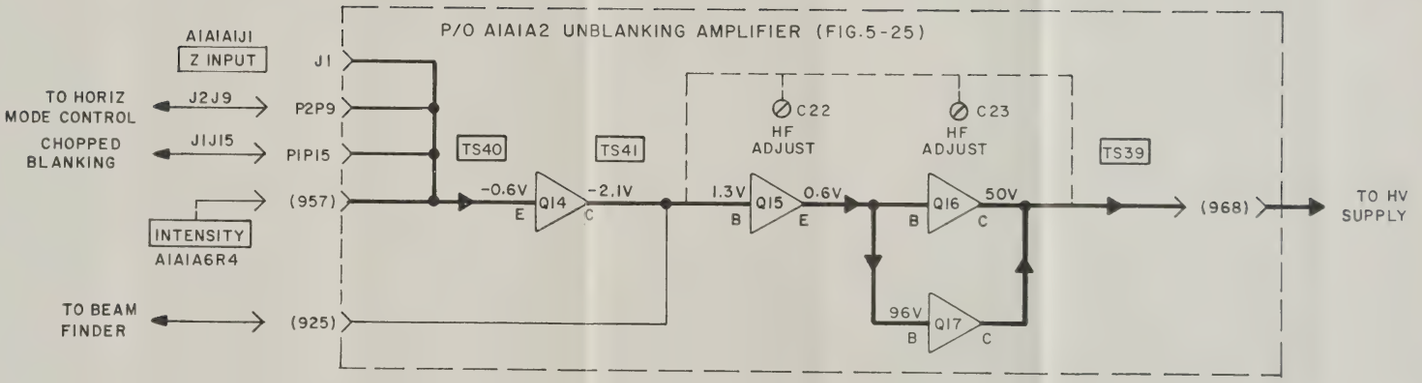

Figure 5-15. Unblanking Amplifier, Functional Signal Flow Diagram

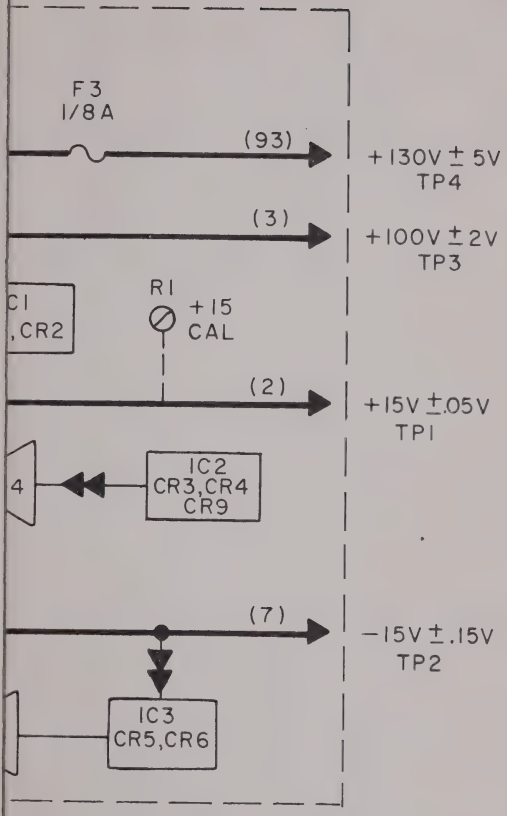

Figure 5-16. Low Voltage Power Supply, Functional Signal Flow Diagram

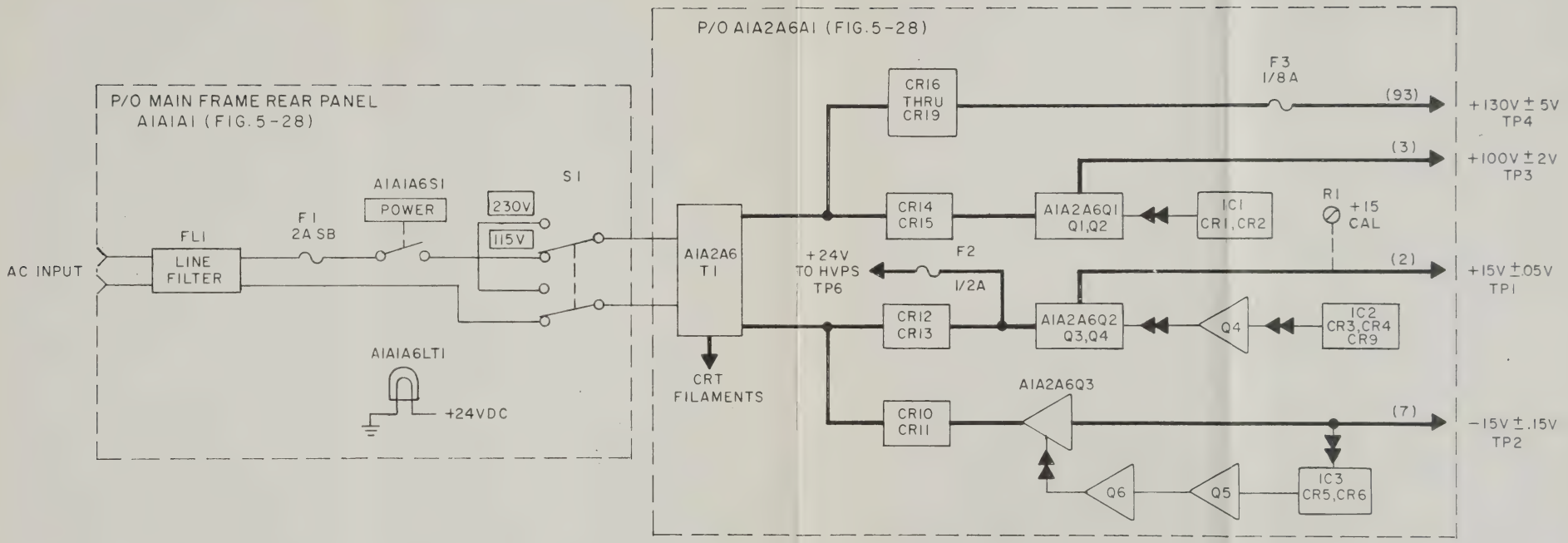

FOR USE ON AN/USM-281D CONFIGURATION ONLY. SEE FIGURE A-6 FOR AN/USM-281E CONFIGURATION.

Figure 5-16. Low Voltage Power Supply, Functional Signal Flow Diagram

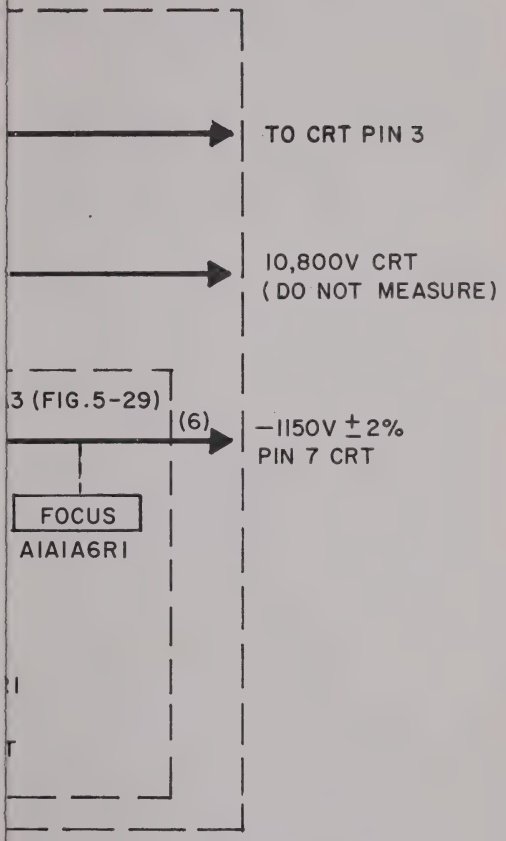

Figure 5-17. High Voltage Power Supply, Functional Signal Flow Diagram

TEST DATA

GENERAL NOTES

A. Oscilloscope AN/USM-281 required.

B. Voltages measured with no signal. Trigger test oscilloscope internally.

C. If necessary, refer to paragraph 5-18 for troubleshooting sequence, and figure 5-29 for test point location.

SPECIFIC NOTES

1. Make the following control settings:

CONTROL	POSITION
AC GND DC (29) (32)	DC
VOLTS/DIV Vernier (26) (35)	CAL
VOLTS/DIV (26) (35)	Push in
VERTICAL MODE/TRIG MODE (36)	ALT and DSPLY
VOLTS/DIV (26) (35)	.2
MAIN TRIG COUPLING (23)	AC
DLY'D TRIG COUPLING (14)	AC
MAIN TRIG SLOPE	+
DLY'D TRIG SLOPE	+
MAIN TRIG SOURCE (20)	INT
DLY'D TRIG SOURCE (11)	INT
TRIG AUTO SINGLE (18)	SINGLE
HORIZ MODE SWITCH (16)	NORM
TIME/DIV Vernier (17)	CAL
HORIZ POSITION (6)	Push in
VERT GAIN X1 X5	X1

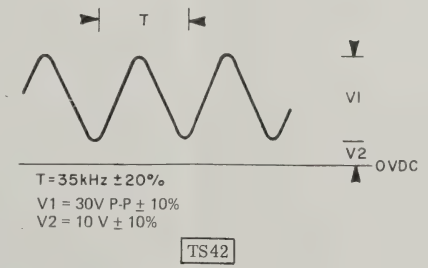

2. Test Steps:

Trigger the test oscilloscope internally. Measure waveform at TS42.

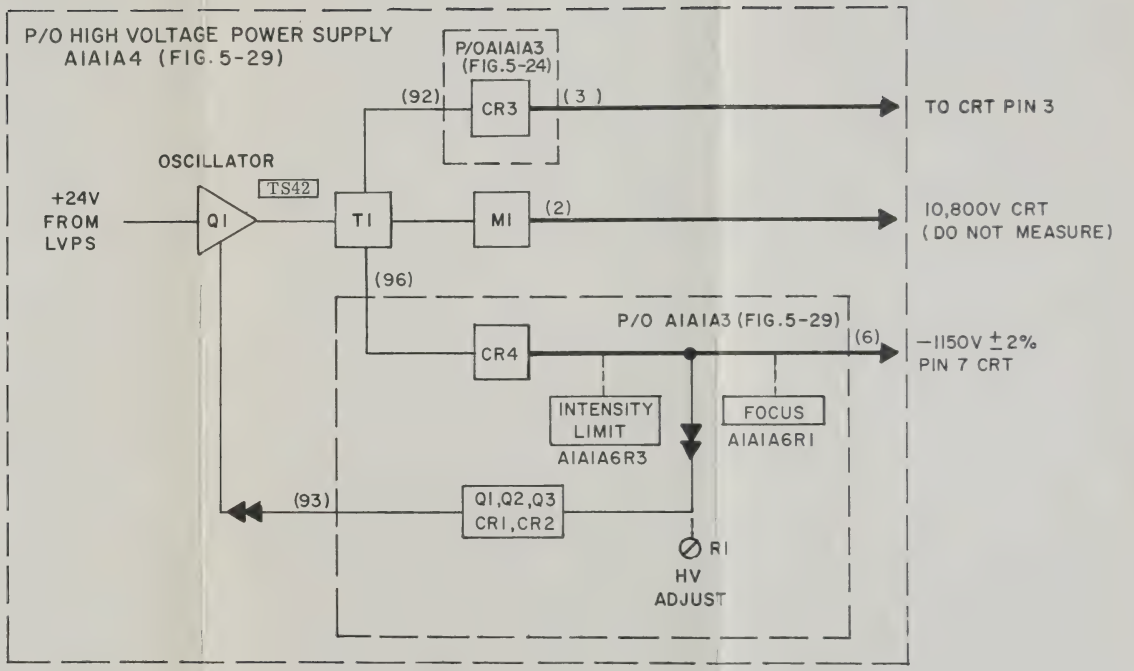

Figure 5-17. High Voltage Power Supply, Functional Signal Flow Diagram

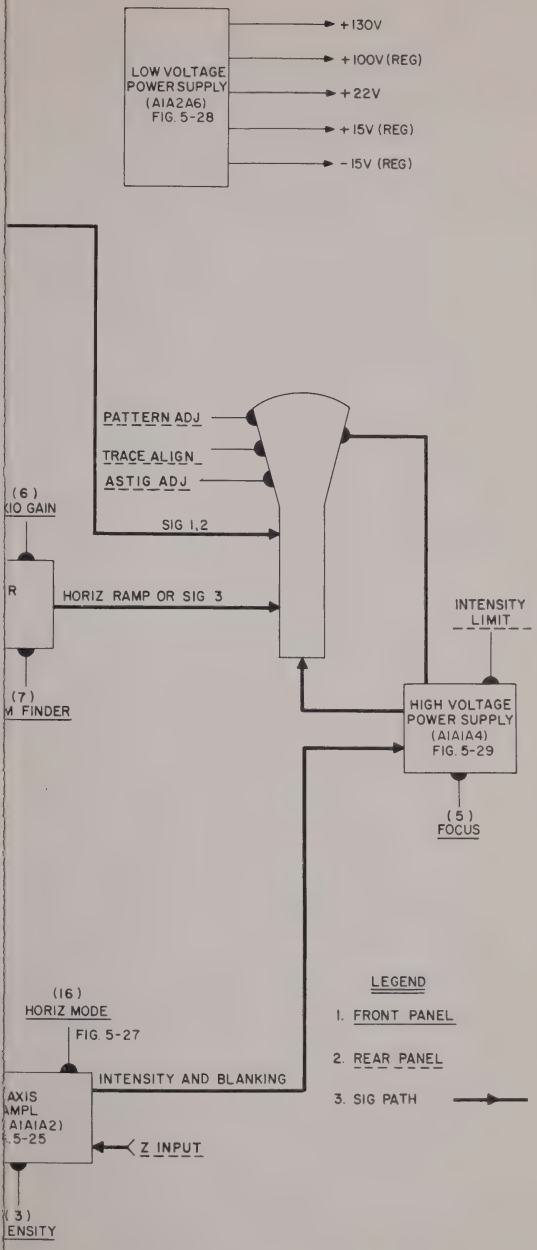

Figure 5-18. Block Diagram

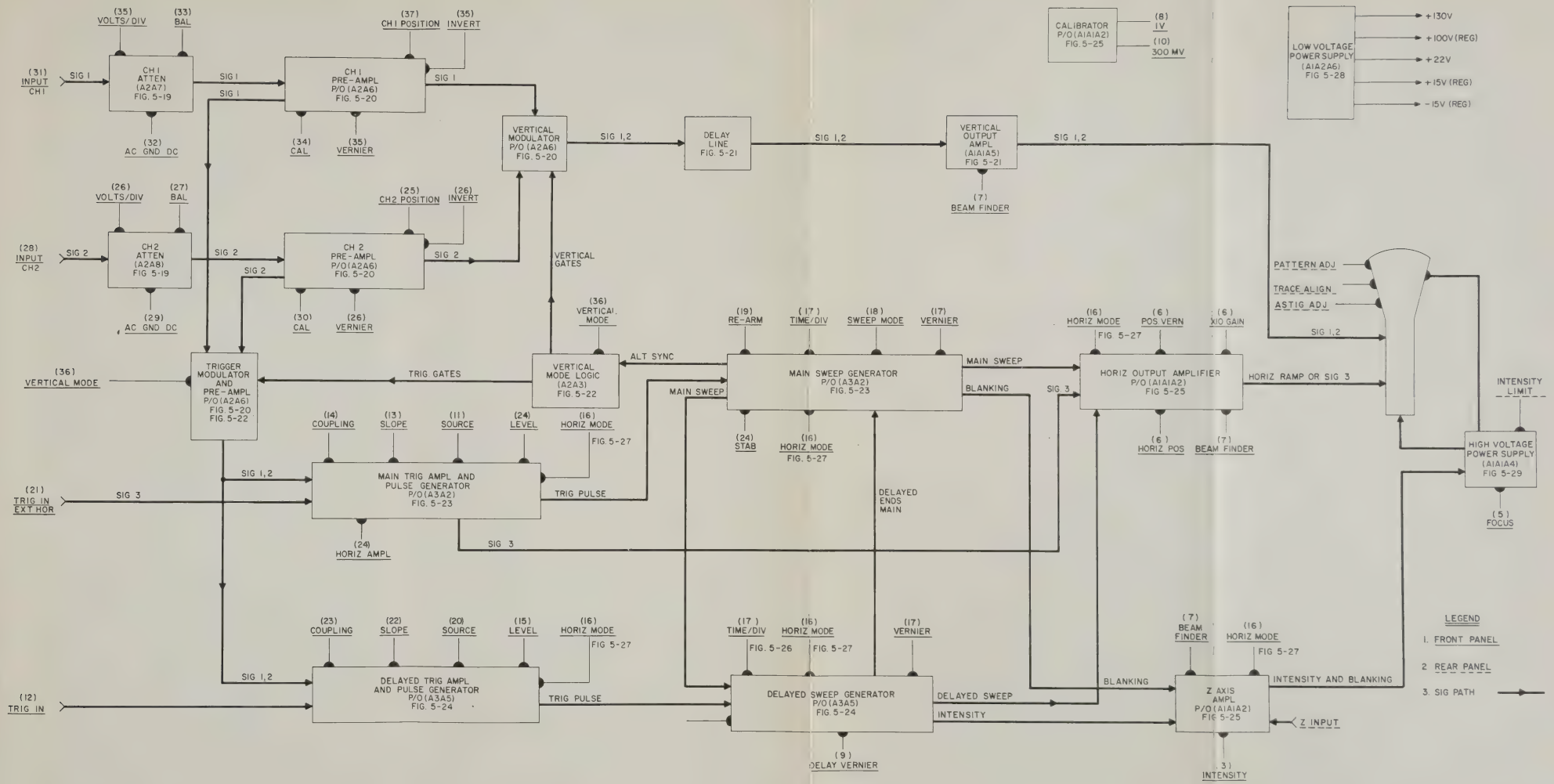

Figure 5-18. Block Diagram

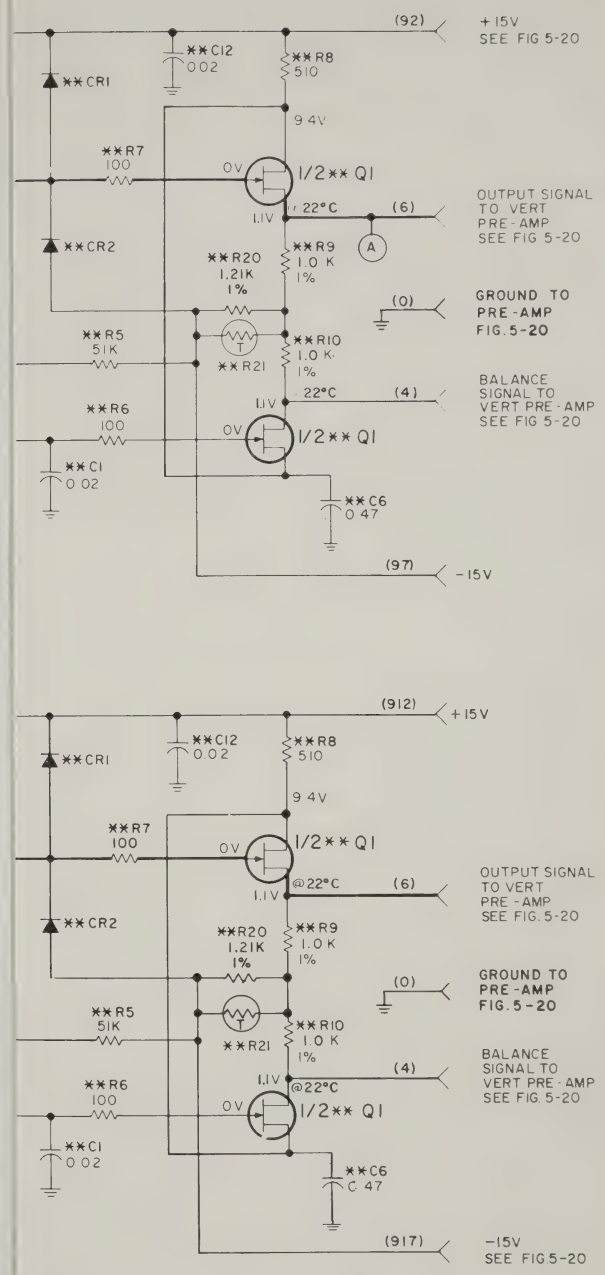

VERTICAL ATTENUATOR

Figure 5-19. Vertical Attenuator

NOTES

1. Unless otherwise indicated, resistors are 1/4 watt, 5% or 1/8 watt, 1%. Capacitors are indicated in microfarads.

2. Numbers in parentheses indicate wire color using resistor color code.
   Example: White–Red–Blue is (926).

3. Primary signal paths weighted. Feedback paths standard line weight with double arrows. Secondary signal paths standard line weight with single arrow.

4. Mode voltages +5% unless otherwise stated.

5. Supply voltages +15 ±.05v
   −15 ±.15v
   +100± 2.0v
   as measured at the supply.

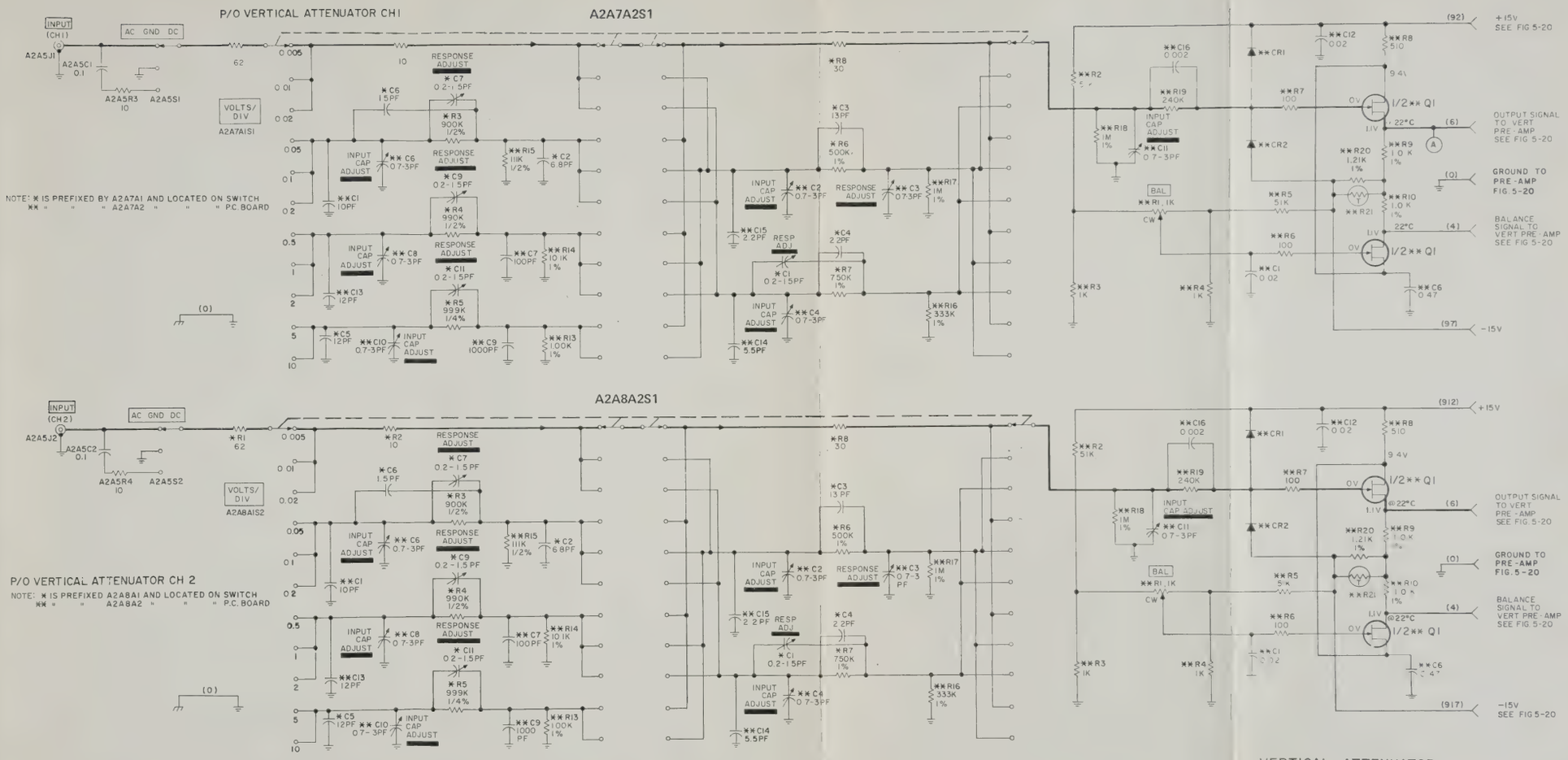

Figure 5-19. Vertical Attenuator

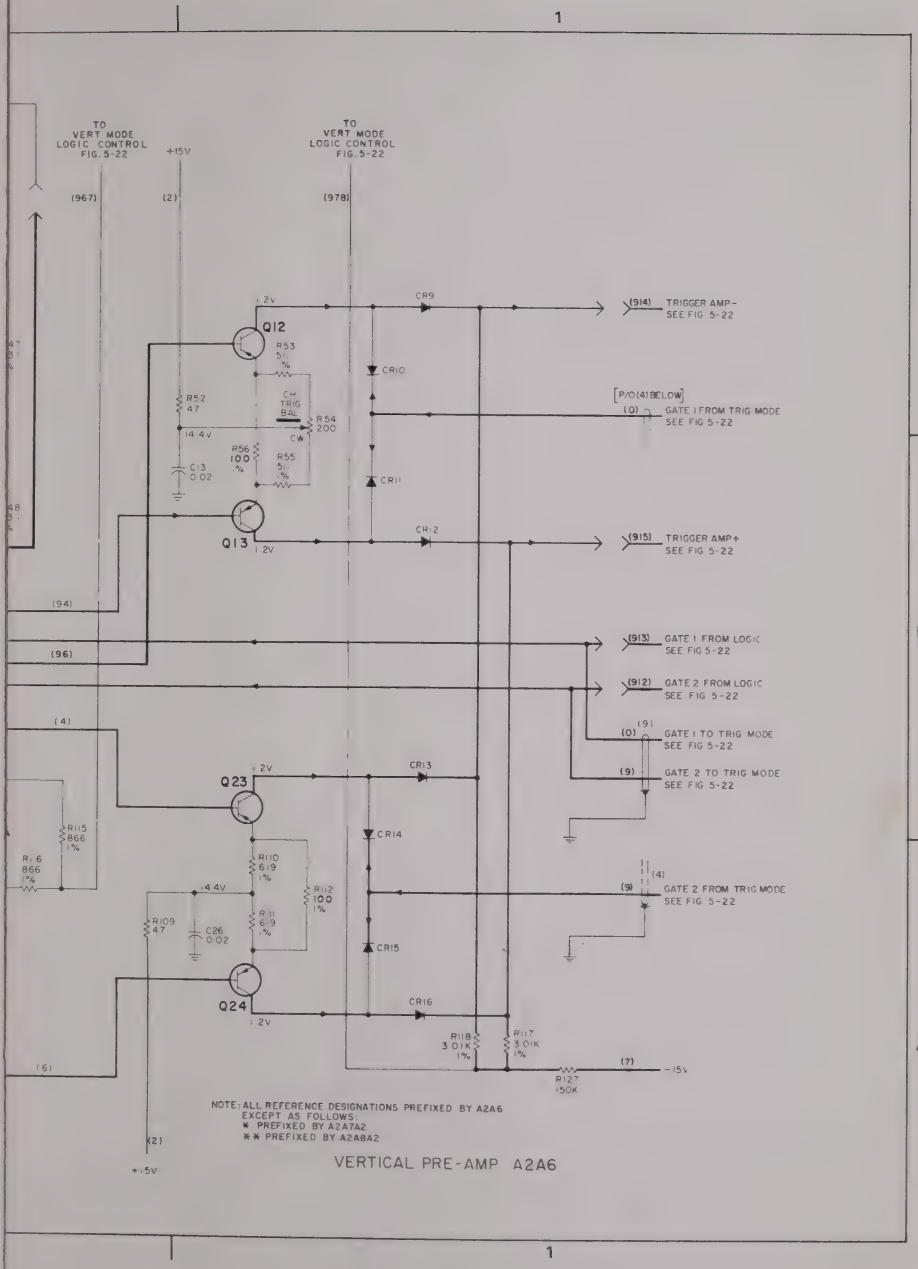

Figure 5-20. Vertical Pre-Amplifier

NOTES

1. Unless otherwise indicated, resistors are 1/4 watt, 5% or 1/8 watt, 1%. Capacitors are indicated in microfarads.
2. Numbers in parentheses indicate wire color using resistor color code. Example: White–Red–Blue is (926).
3. Primary signal paths weighted. Feedback paths standard line weight with double arrows. Secondary signal paths standard line weight with single arrow.
4. Mode voltage ±5% unless otherwise noted.
5. Supply voltage +15 ±.05v
   -15 ±.15v
   +100 ±2.0v
   as measured at the supply.

PART LOCATION INDEX

REF DES	ZONE	REF DES	ZONE	REF DES	ZONE	REF DES	ZONE
C1	4B	IC1	3C	R6	4B	H64	4A
C2	4B	IC2	3A	R7	4C	R65	4A
C3	4C			R8	4C	R66	4A
C4	4C	L1	4B	R9	4D	R67	4A
C5	4B	L2	2B	R10	4B	R68	4A
C9	2B	L3	2C	R12	4C	R69	4A
C10	2C	L4	2A	R13	4C	R70	4A
C11	2B	L5	2A	R14	4C	R72	4B
C12	2C	L6	4A	R15	4B	R73	4D
C13	1B	L7	4A	R16	3C	R74	3B
C14	4A	L8	4B	R19	3C	R75	3C
C15	4A	L9	3B	R20	3C	R76	3C
C16	4B	L10	3A	R21	3C	R79	3C
C17	4A			R22	3B	R80	3C
C18	4A	Q1	4B	R23	3C	R81	3A
C19	3A	Q1	4C	R24	3C	R82	3A
C20	3B	Q2	4B	R25	3C	R83	3A
C21	2B	Q2	4C	R26	3B	R84	3C
C22	2A	Q6	3C	R29	3C	R85	3A
C26	1A	Q7	3B	R30	3B	R86	3A
C29	2A	Q8	2C	R31	2C	R89	3B
C26	2C	Q9	2B	R32	2B	R90	3A
C27	2A	Q10	2C	R33	2C	R91	2A
		Q11	2B	R34	2C	R92	2A
CR1	2C	Q12	1C	R35	2B	R93	2A
CR2	2C	Q13	1B	R40	2C	R94	2B
CR3	2B	Q14	4A	R41	2C	R97	2A
CR4	2B	Q14	4B	R42	2B	R100	2B
CR5	2B	Q15	4A	R43	2C	R101	2A
CR6	2A	Q15	4B	R44	2C	R102	2A
CR7	2A	Q16	4A	R45	2B	R103	2A
CR8	2A	Q19	3A	R46	2C	R104	2B
CR9	3A	Q20	3A	R47	2C	R105	2A
CR10	1C	Q21	2B	R48	2B	R109	1A
CR11	1B	Q22	2A	R52	1C	R110	1A
CR12	1B	Q23	1B	R53	1C	R111	1A
CR13	1B	Q24	1C	R54	1C	R112	1A
CR14	1A	Q3	4B	R55	1B	R115	2A
CR15	1A			R56	1B	R116	2A
CR16	2A	R1	4C	R59	4B	R117	1A
CR17	4B	R2	4C	R60	4A	R118	1A
CR18	4B	R3	4B	R61	4A	R127	1A
CR19	4A	R4	4B	R62	4C	T1	3C
CR20	4A	R5	4B	R63	4A	T2	3B

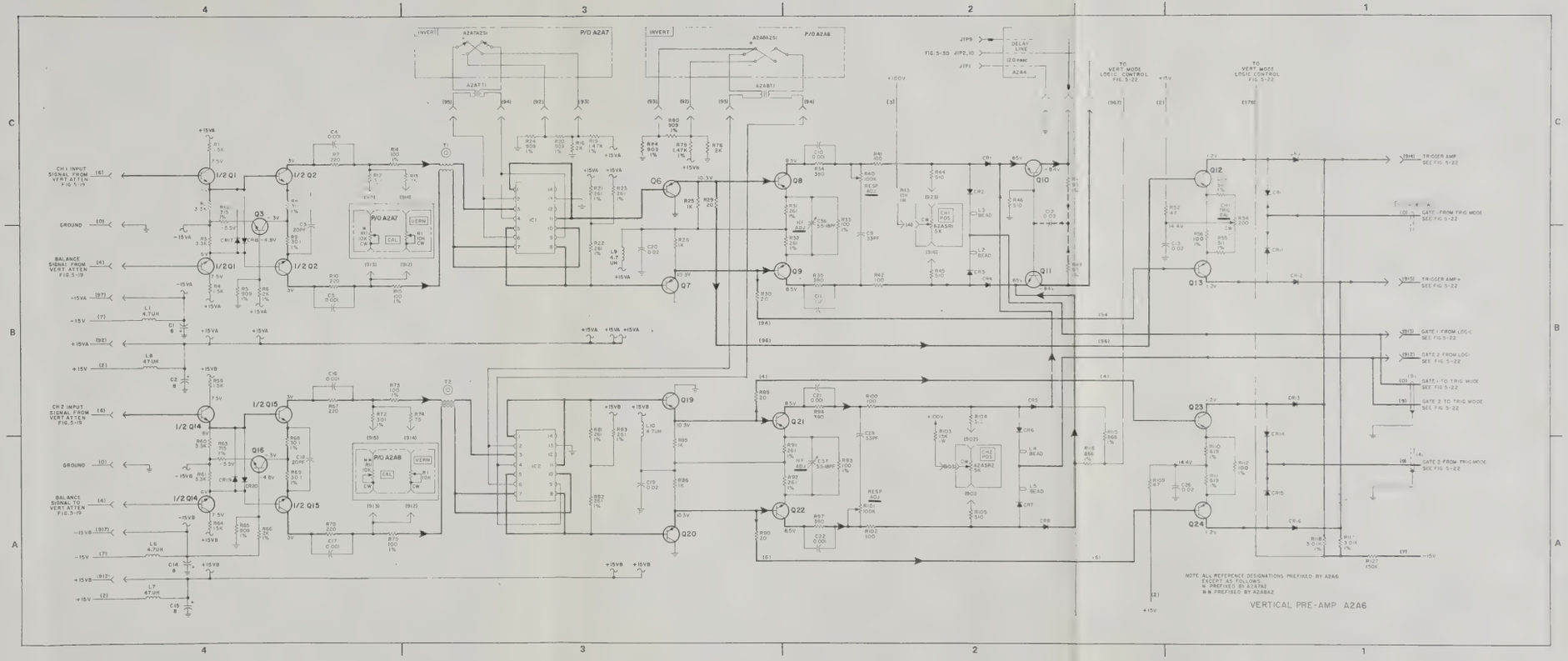
CH I INPUT SIGNAL FROM VERT ATTEN FIG 5-19
GROUND
BALANCE SIGNAL FROM VERT ATTEN FIG 5-19
CH 2 INPUT SIGNAL FROM VERT ATTEN FIG 5-19
GROUND
BALANCE SIGNAL TO VERT ATTEN FIG 5-19
P/O A2A7
P/O A2A8
A2A7A2S1
A2A8A2S1
A2A7T1
A2A8T1
DELAY LINE
A2A4
TO VERT MODE LOGIC CONTROL FIG 5-22
TRIGGER AMP SEE FIG 5-22
GATE FROM TRIG MODE SEE FIG 5-22
GATE 1 FROM LOGIC SEE FIG 5-22
GATE 2 FROM LOGIC SEE FIG 5-22
GATE 1 TO TRIG MODE SEE FIG 5-22
GATE 2 TO TRIG MODE SEE FIG 5-22
GATE 2 FROM TRIG MODE SEE FIG 5-22
NOTE ALL REFERENCE DESIGNATIONS PREFIXED BY A2A6 EXCEPT AS FOLLOWS
* PREFIXED BY A2A7A2
** PREFIXED BY A2A8A2
VERTICAL PRE-AMP A2A6

Figure 5-20. Vertical Pre-Amplifier

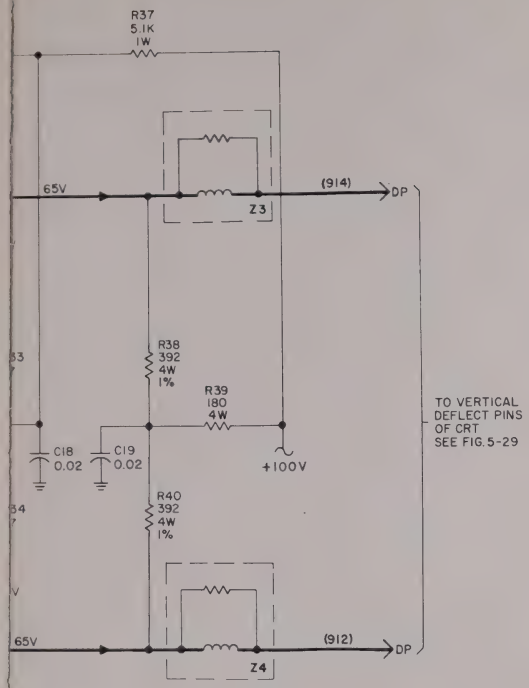

±5% unless otherwise noted.

es +15 ±.02V)
-15 ±.15V) as measured at the supply
+100 ±2.0V)

+100V

VERTICAL OUTPUT AMPLIFIER A1A1A5

Figure 5-21. Vertical Output Amplifier

NOTES

1. Unless othewise indicated, resistors are 1/4 watt, 5% or 1/8 watt , 1%. Capacitors are indicated in microfarads.
2. Numbers in parentheses indicate wire color using resistor color code. Example: White–Red– Blue is (926).
3. Primary signal paths weighted. Feedback paths standard line weight with double arrows, Secondary signal paths standard line weight with single arrow.
4. Mode voltages ±5% unless otherwise stated.
5. Supply voltages +15 ±.05v
   −15 ±.15v
   +100 ±2.0v
   as measured at the supply.

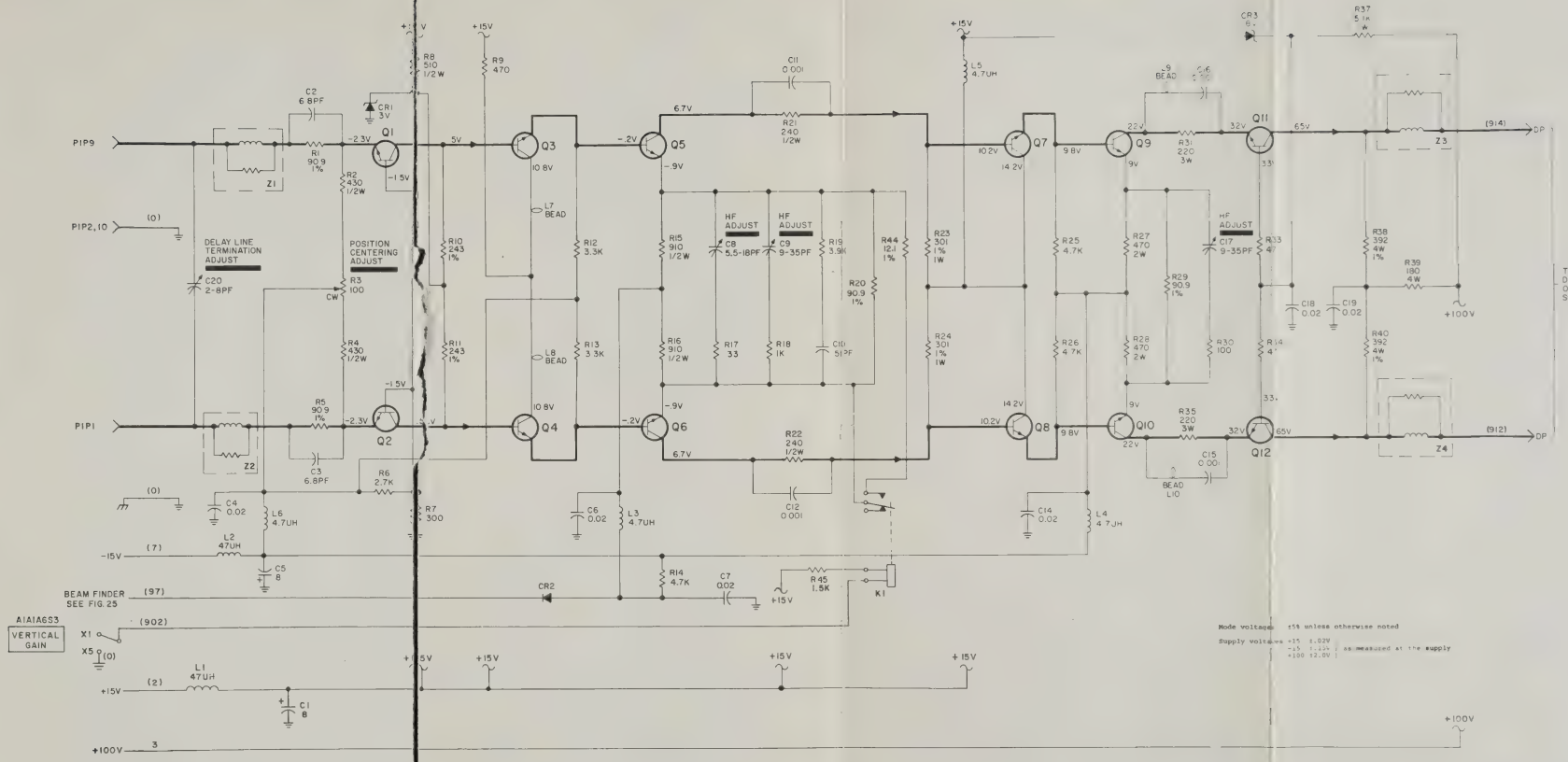

FOR USE ON AN/USM-281D CONFIGURATION ONLY. SEE FIGURE A-7 FOR AN/USM-281E CONFIGURATION.

VERTICAL OUTPUT AMPLIFIER A1A1A5

Figure 5-21. Vertical Output Amplifier

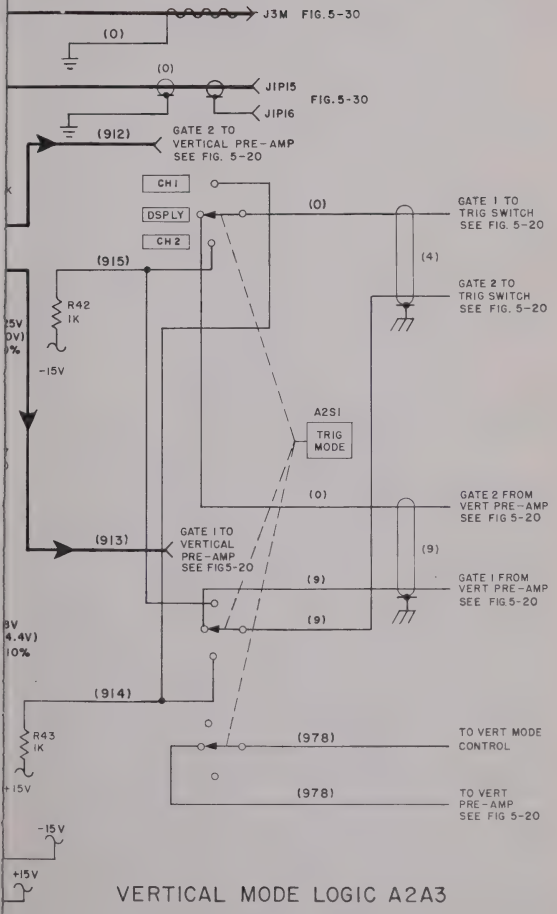

Figure 5-22. Vertical Mode Logic

NOTES

1. Unless otherwise indicated, resistors are 1/4 watt, 5% or 1/8 watt, 1%. Capacitors are indicated in microfarads.
2. Numbers in parentheses indicate wire color using resistor color code. Example: White–Red–Blue is (926).
3. Primary signal paths weighted. Feedback paths standard line weight with double arrows. Secondary signal paths standard line weight with single arrow.
4. Mode voltages ±5% unless otherwise stated.
5. Supply voltages +15 ±.C. v
   −15 ±.15v
   +100 ± 2.0v
   as measured at the supply.

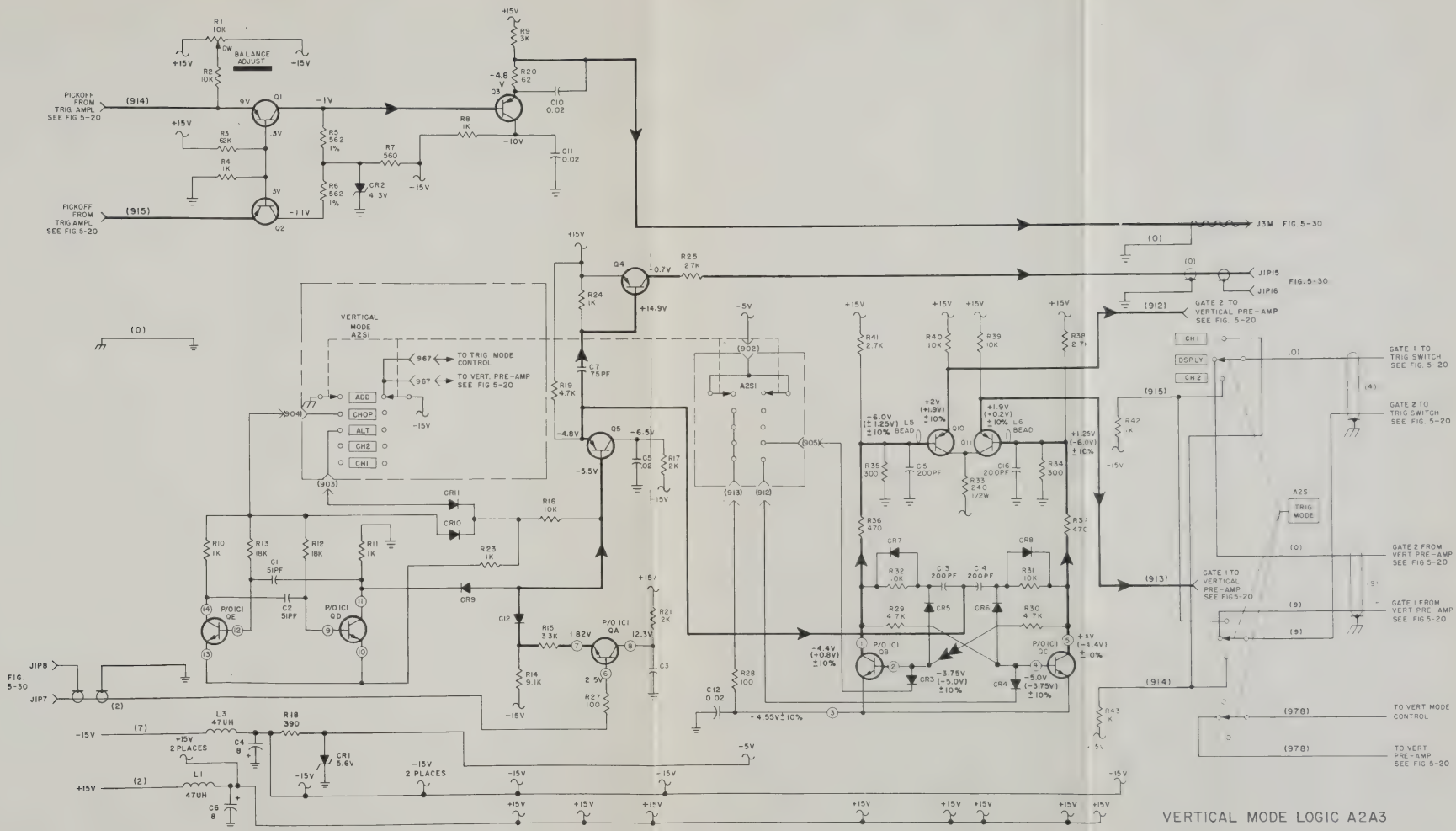
VERTICAL MODE LOGIC A2A3
VERTICAL MODE A2S1
TO TRIG MODE CONTROL
TO VERT. PRE-AMP SEE FIG 5-20
ADD
CHOP
ALT
CH2
CH1
PICKOFF FROM TRIG AMPL SEE FIG 5-20
BALANCE ADJUST
GATE 2 TO VERTICAL PRE-AMP SEE FIG. 5-20
GATE 1 TO TRIG SWITCH SEE FIG. 5-20
GATE 2 TO TRIG SWITCH SEE FIG. 5-20
GATE 2 FROM VERT PRE-AMP SEE FIG 5-20
GATE 1 TO VERTICAL PRE-AMP SEE FIG5-20
GATE 1 FROM VERT PRE-AMP SEE FIG 5-20
TO VERT MODE CONTROL
TO VERT PRE-AMP SEE FIG 5-20
DSPLY
TRIG MODE

Figure 5-22. Vertical Mode Logic

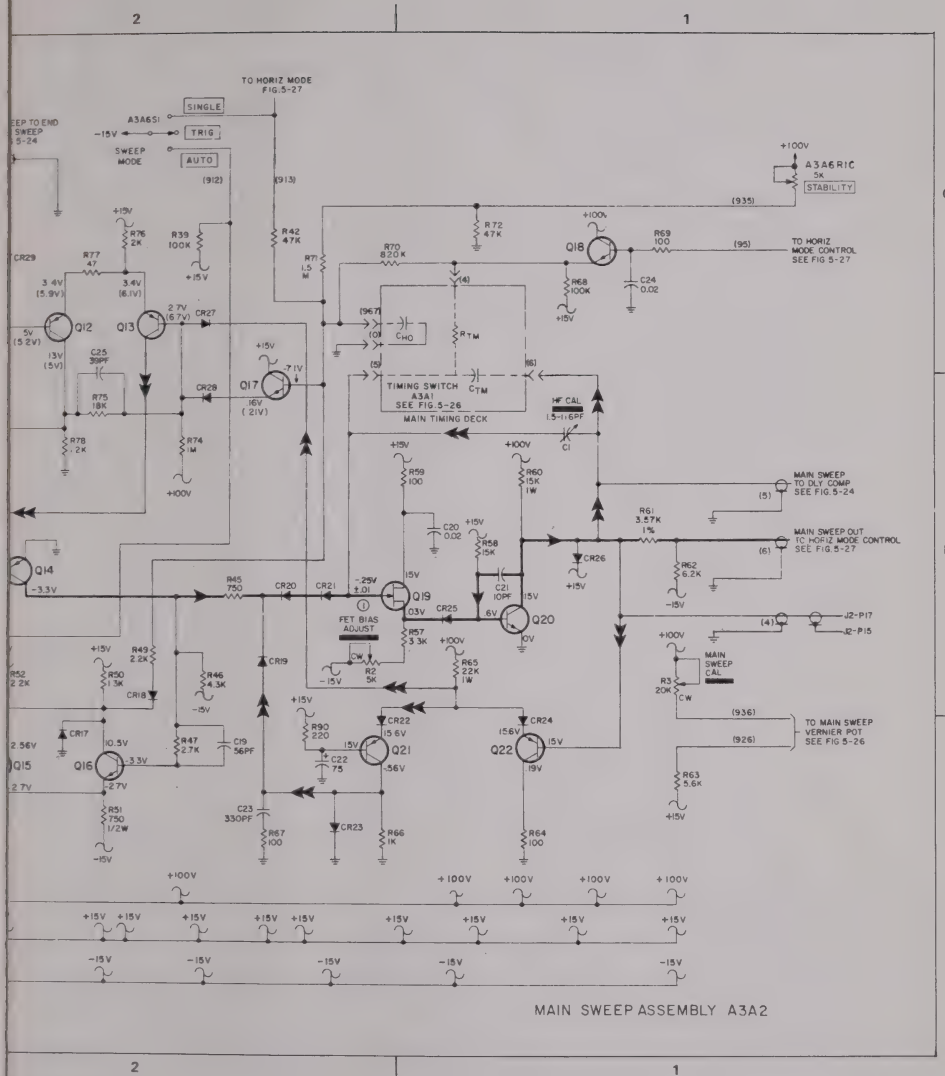

Figure 5-23. Main Trigger and Sweep Generator

PART LOCATION INDEX

REF DES	ZONE
C1	1B
C2	5A
C3	5A
C4	5A
C5	5B
C6	4A
C7	4B
C8	4B
C9	3B
C10	5B
C11	5B
C12	5B
C13	4C
C14	4C
C15	5A
C16	5A
C17	5A
C18	2B
C19	2A
C20	1B
C21	1B
C22	2A
C23	2A
C24	1C
C25	2C
C26	3C
C27	3C
C28	4A
CR1	5B
CR2	5B
CR3	4A
CR4	4B
CR5	4B
CR6	4B
CR7	4B
CR8	4B
CR9	5C
CR10	5C
CR11	4C
CR12	4C
CR13	3B
CR14	3B
CR15	3B
CR16	3B
CR17	2A
CR18	2B
CR19	2B
CR20	2B
CR21	2B
CR22	2A
CR23	2A
CR24	1A
CR25	1B
CR26	1B
CR27	2C
CR28	2B
CR29	2C
CR30	2C
CR31	3C
CR32	3C
CR33	3B
CR34	3B
CR35	3B
L1	5A
L2	5A
L3	5A
L4	4B
L5	4B
L7	5A
L8	5A
Q1	5B
Q2	4B
Q3	4A
Q4	4B
Q5	4B
Q6	4C
Q7	5B
Q8	5B
Q9	5B
Q10	5C
Q11	3B
Q12	2C
Q13	2C
Q14	2B
Q15	2A
Q16	2A
Q17	2B
Q18	1C
Q19	2B
Q20	1B
Q21	2A
Q22	1A
R1	4B
R2	2B
R3	1B
R4	5A
R5	5B
R6	5B
R7	5B
R8	5A
R9	4B
R10	4A
R11	4A
R13	4B
R14	4B
R15	4B
R16	4B
R17	4B
R18	3B
R19	5B
R20	5B
R21	5B
R22	5C
R23	5C
R24	5C
R25	5B
R26	5C
R27	4C
R28	5B
R29	4C
R30	4C
R32	4B
R33	4B
R34	4C
R35	4C
R36	4B
R37	3B
R38	3B
R39	2C
R40	3B
R41	3B
R42	2C
R43	2B
R45	2B
R46	2B
R47	2A
R48	2A
R49	2B
R50	2B
R51	2A
R52	2B
R54	2A
R55	2A
R56	3C
R57	1B
R58	1B
R59	1B
R60	1B
R61	1B
R62	1B
R63	1A
R64	1A
R65	1B
R66	2A
R67	2A
R68	1C
R69	1C
R70	2C
R71	2C
R72	1C
R74	2B
R75	2B
R76	2C
R77	2C
R78	2B
R79	2B
R80	2C
R81	2C
R82	3C
R83	3B
R84	3B
R85	3B
R86	3C
R87	3C
R88	3B
R89	3B
R90	2A
R91	3C
R92	3B
T1	4B
Z1	4C

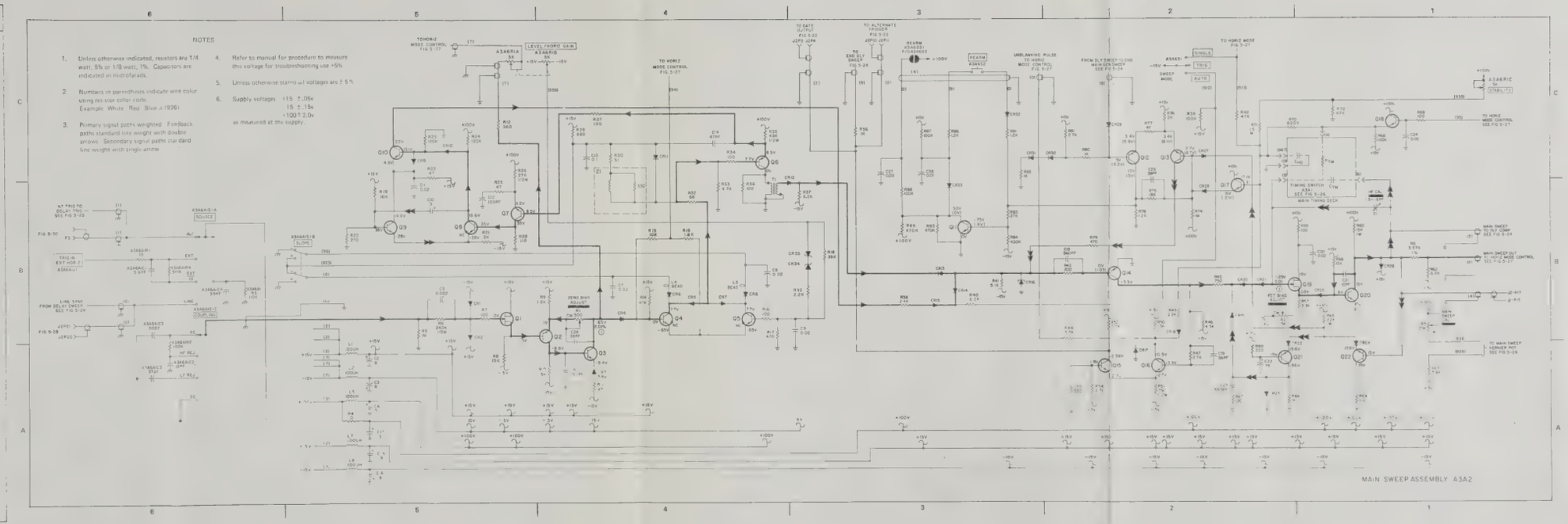
NOTES
1. Unless otherwise indicated, resistors are 1/4 watt, 5% or 1/8 watt, 1%. Capacitors are indicated in microfarads.
2. Numbers in parentheses indicate wire color using resistor color code. Example: White Red Blue is 1926
3. Primary signal paths weighted. Feedback paths standard line weight with double arrows. Secondary signal paths standard line weight with single arrow.
4. Refer to manual for procedure to measure this voltage for troubleshooting use ±5%
5. Unless otherwise stated all voltages are ± 5%
6. Supply voltages +15 ±.05v
-15 ±.15v
+100 ±2.0v
as measured at the supply.
MAIN SWEEP ASSEMBLY A3A2

FOR USE ON AN/USM-281D CONFIGURATION ONLY. SEE FIGURE A-8 FOR AN/USM-281E CONFIGURATION.

Figure 5-23. Main Trigger and Sweep Generator

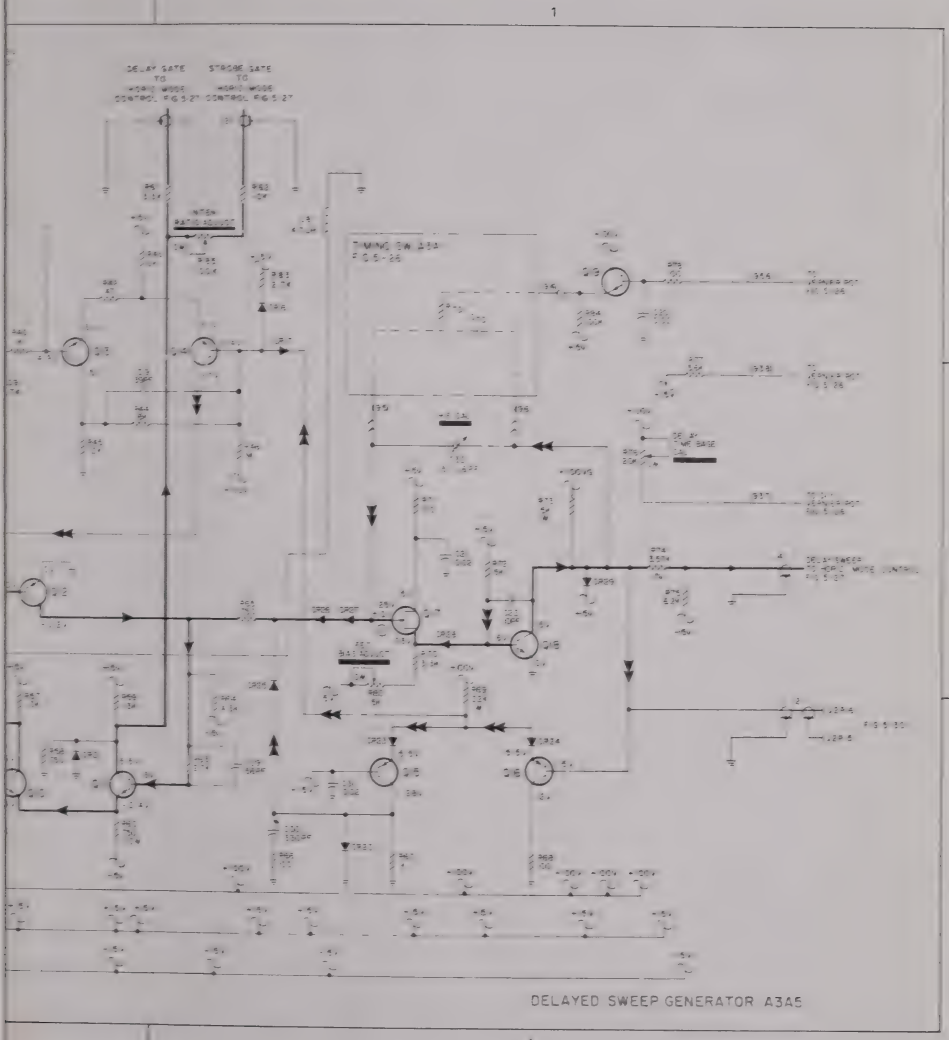

Figure 5-24. Delayed Trigger and Sweep Generator

PARTS LOCATION INDEX

REF DES	ZONE	REF DES	ZONE	REF DES	ZONE	REF DES	ZONE
C1	4B	CR14	2B	R1	4B	R50	2B
C2	4A	CR15	2B	R2	4B	R51	2A
C3	4B	CR16	1C	R3	4B	R52	2A
C4	4B	CR17	1C	R4	4B	R53	2A
C5	4C	CR18	2B	R5	3B	R54	2A
C6	3C	CR19	2B	R6	3B	R55	2A
C7	3B	CR20	2A	R7	3A	R57	2A
C8	4A	CR21	2A	R8	3A	R58	2A
C9	4A	CR22	1A	R9	3B	R59	2A
C10	4A	CR23	1A	R11	4C	R60	2A
C11	4C	CR24	1A	R12	4C	R61	1C
C12	2C	CR25	1B	R14	3C	R62	1C
C13	2C	CR26	1B	R15	3C	R63	1A
C14	2C	CR27	1B	R16	3C	R64	1A
C15	2C	CR28	1B	R17	3C	R65	1B
C16	2B	CR29	1B	R18	3C	R66	1A
C17	2C	CR30	2A	R19	3C	R67	1A
C18	2C	CR31	3B	R20	3B	R68	1A
C19	2B			R22	3B	R69	1A
C20	1C	L1	4A	R23	3B	R70	1B
C21	1B	L2	4A	R24	3C	R71	1B
C22	1B	L3	3B	R25	2C	R72	1B
C23	2B	L4	3B	R26	2C	R73	1B
C24	4A	L6	4A	R27	3B	R74	1B
C25	4A	L7	4A	R28	2B	R75	1B
C26	4A	L8	1C	R29	2C	R76	1B
C27	2A			R30	2C	R77	1B
C28	2A	Q1	4B	R31	2C	R78	1C
C29	1A	Q2	3B	R32	2C	R79	4A
C30	1A	Q3	3B	R33	2C	R80	4A
C31	1A	Q4	3B	R34	2B	R81	2C
C32	1B	Q5	3B	R35	2B	R82	1B
C33	1B	Q6	3C	R36	2C	R83	1C
		Q7	2B	R37	2C	R84	1C
CR1	4B	Q8	2B	R38	2C	R85	1C
CR2	4B	Q9	2A	R39	2B	R86	3B
CR3	3A	Q10	2A	R40	2C	R87	3A
CR4	3B	Q11	2A	R41	2B		
CR5	3B	Q12	2B	R42	2C	T1	3C
CR6	3B	Q13	2C	R43	2C		
CR7	3B	Q14	1C	R44	2B	TP1	3B
CR8	3C	Q15	1A	R45	2B		
CR9	3C	Q16	1A	R46	1B	Z1	4C
CR10	3B	Q17	1B	R47	2B		
CR11	2B	Q18	1B	R48	2B		
CR12	2B	Q19	1C				
CR13	2B	Q20	2C				

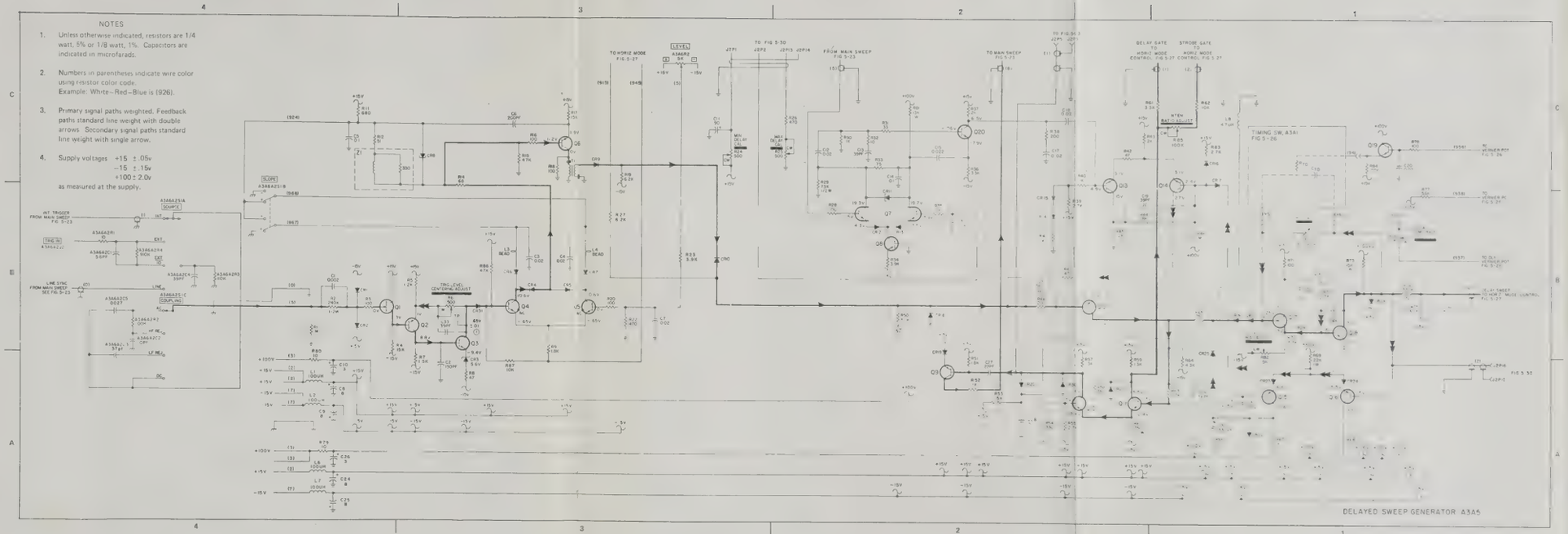
NOTES
1. Unless otherwise indicated, resistors are 1/4 watt, 5% or 1/8 watt, 1%. Capacitors are indicated in microfarads.
2. Numbers in parentheses indicate wire color using resistor color code. Example: White–Red–Blue is (926).
3. Primary signal paths weighted. Feedback paths standard line weight with double arrows. Secondary signal paths standard line weight with single arrow.
4. Supply voltages +15 ± .05v
−15 ± .15v
+100 ± 2.0v
as measured at the supply.
DELAYED SWEEP GENERATOR A3A5

FOR USE ON AN/USM-281D CONFIGURATION ONLY. SEE FIGURE A-9 FOR AN/USM-281E CONFIGURATION.

Figure 5-24. Delayed Trigger and Sweep Generator

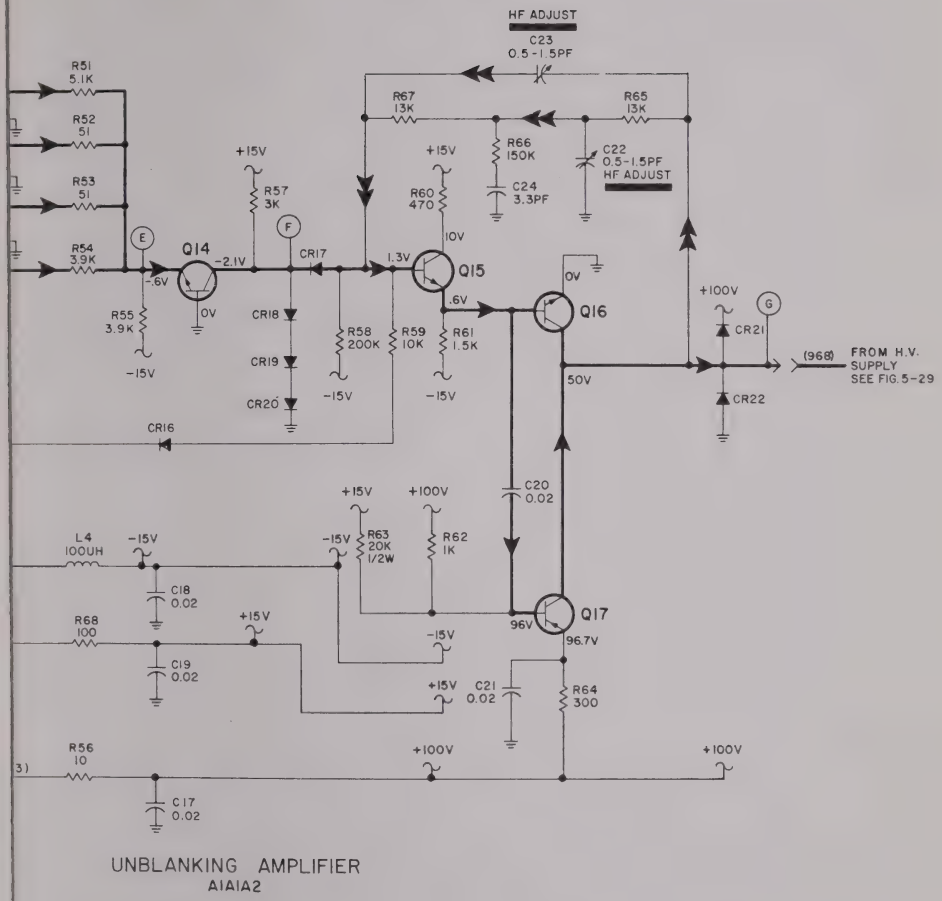

Figure 5-25. Horizontal Output Amplifier

NOTES

[illegible] indicated, resistors are 1/4 [illegible] 1/8 watt, 1%. Capacitors are [illegible] microfarads.

Numbers in parentheses indicate wire color using resistor color code. Example: White - Red - Blue is (926).

Primary signal paths weighted. Feedback paths standard line weight with double arrows. Secondary signal paths standard weight with single arrow.

Mode voltages ± 5% unless otherwise noted.

Supply voltages: +15 ± .05v; 15 ± 15v; +100 ± 2.0v; +130 ± 5.0v as measured at the supply in the line set at 115v ±3%.

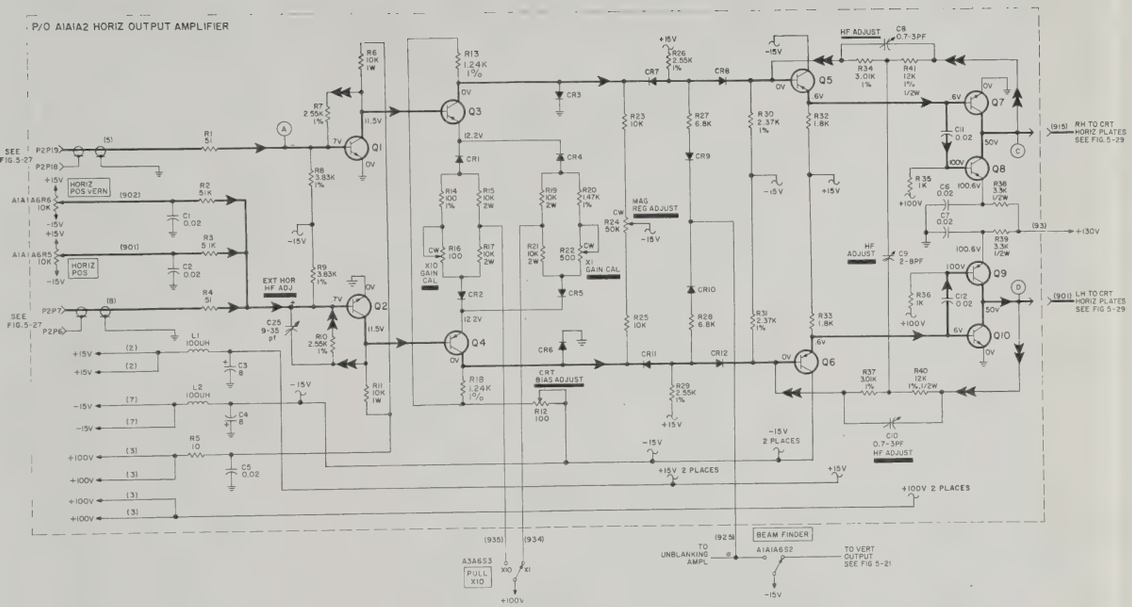

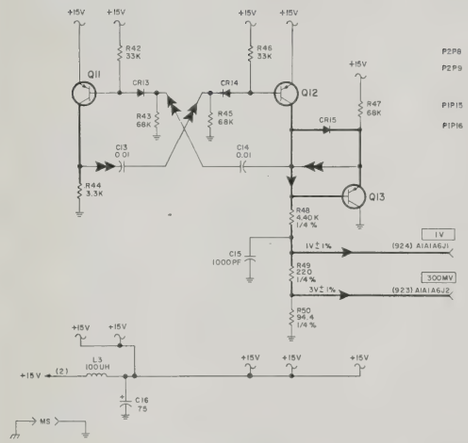

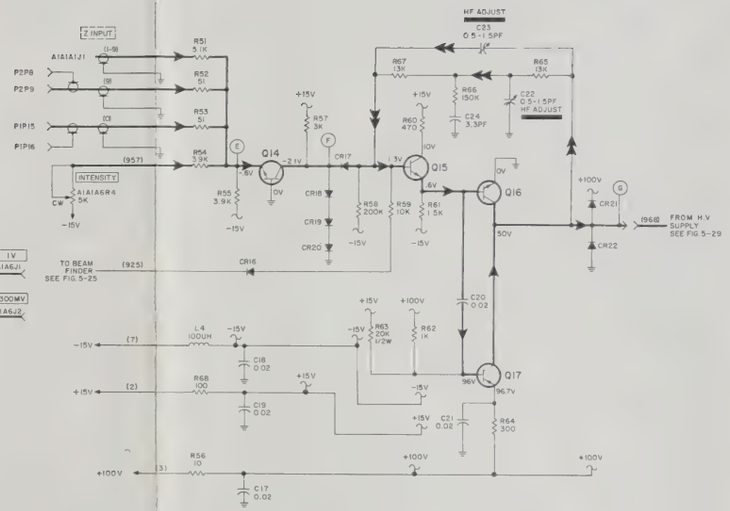

Figure 5-25. Horizontal Output Amplifier

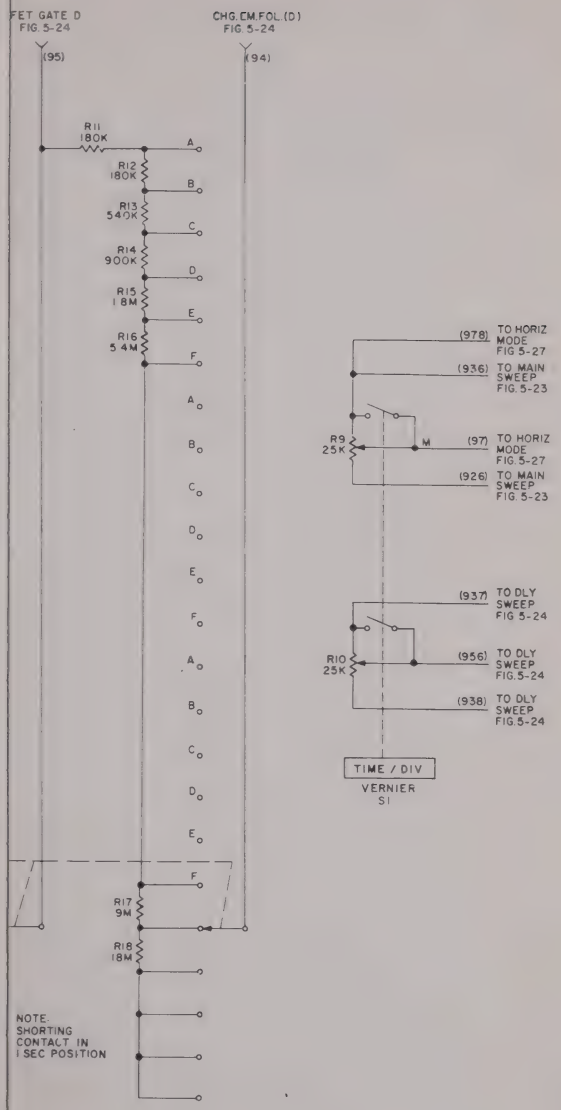

TIMING SWITCH A3A1

Figure 5-26. Timing Switch

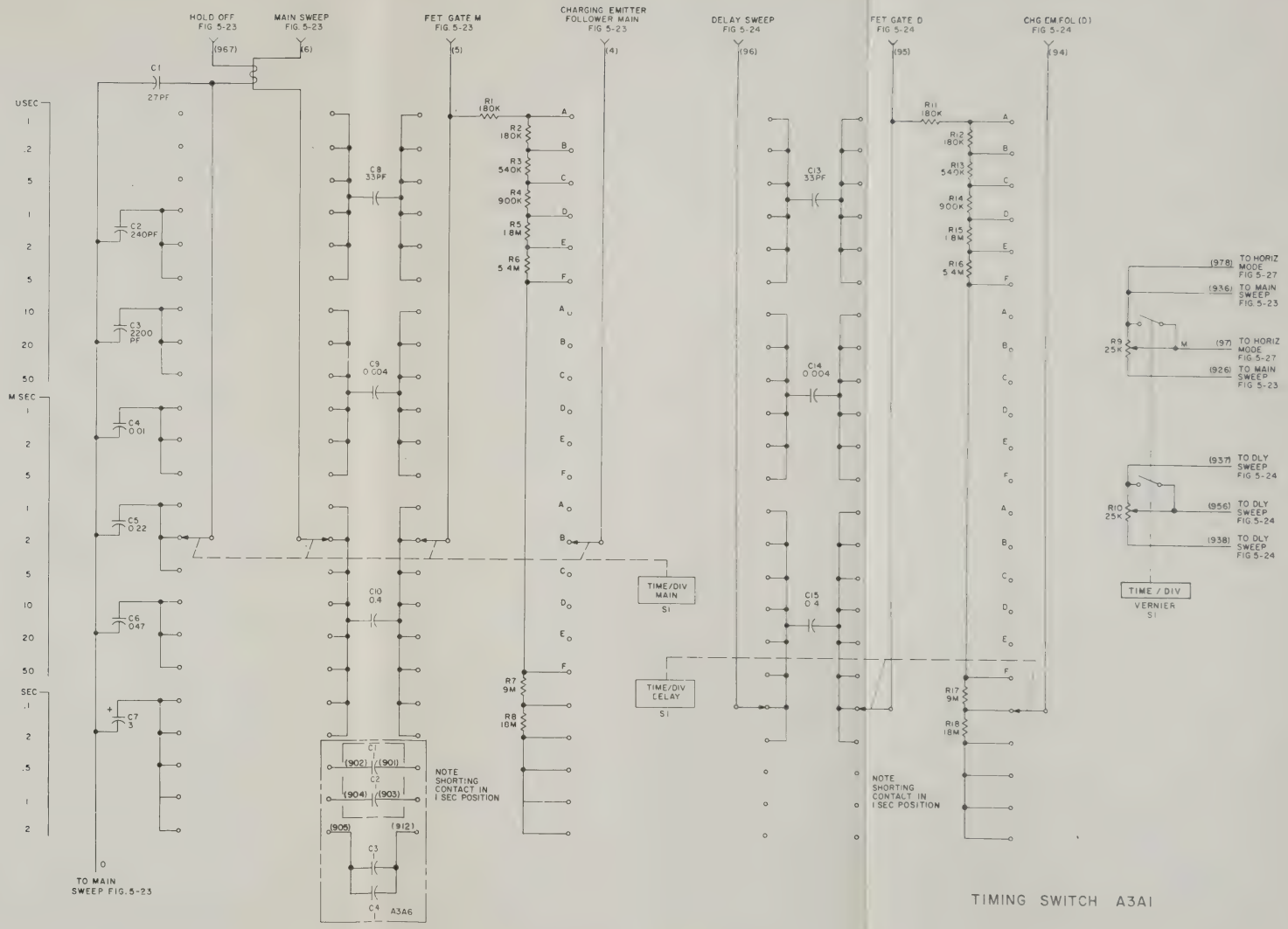

Figure 5-26. Timing Switch

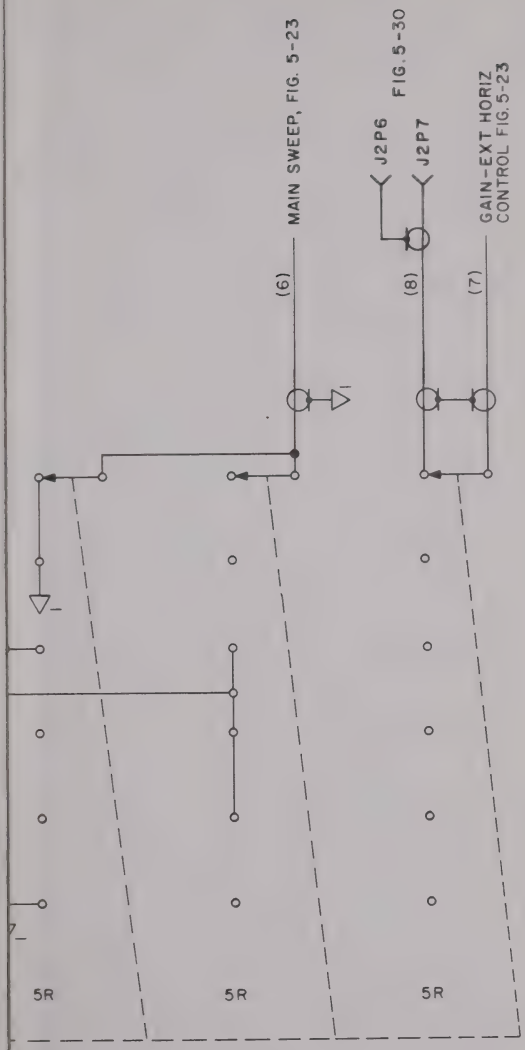

ONTAL MODE CONTROL A3A6

Figure 5-27. Horizontal Mode Control

NOTES

1. Unless otherwise indicated, resistors are 1/4 watt, 5% or 1/8 watt, 1%. Capacitors are indicated in microfarads.
2. Numbers in parentheses indicate wire color using resistor color code. Example: White–Red–Blue is (926).
3. Primary signal paths weighted. Feedback paths standard line weight with double arrows. Secondary signal line paths standard line weight with single arrow.

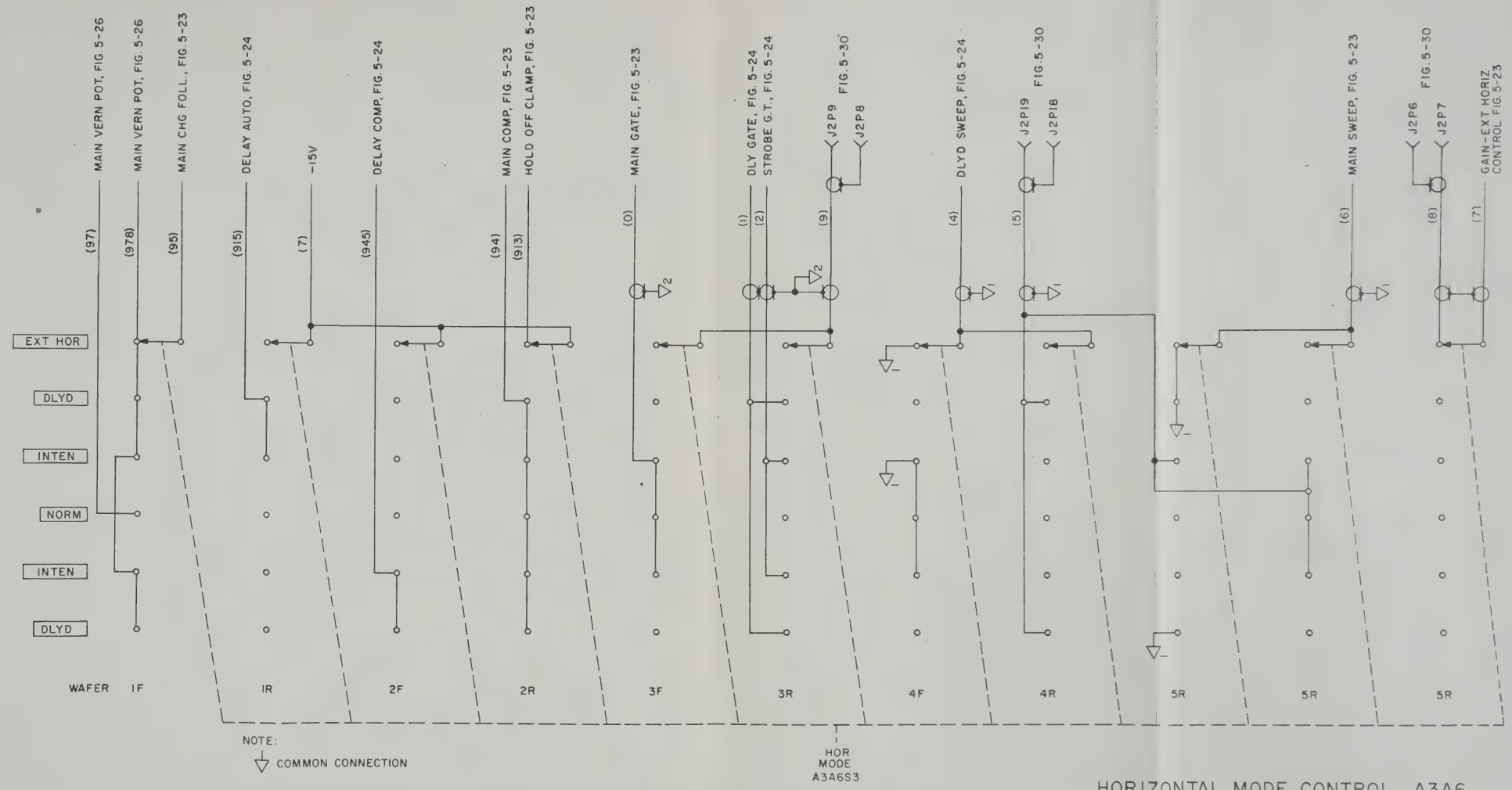

HORIZONTAL MODE CONTROL A3A6

Figure 5-27. Horizontal Mode Control

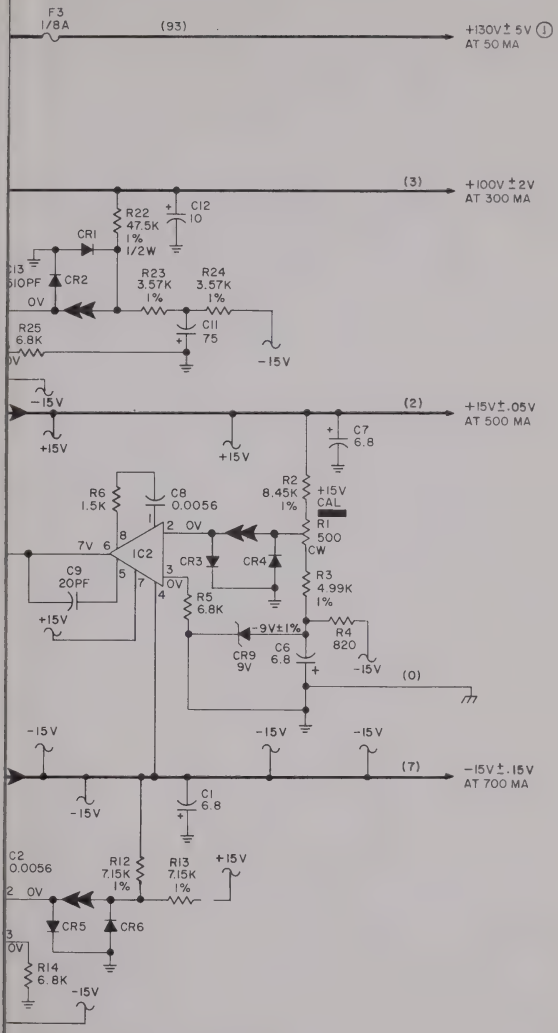

L.V. POWER SUPPLY A1A2A6

Figure 5-28. Low Voltage Power Supply

NOTES

1. Unless otherwise indicated, resistors are 1/4 watt, 5% or 1/2 watt, 1%. Capacitors are indicated in microfarads.
2. Numbers in parentheses indicate wire color using resistor color code. Example: White–Red–Blue is (926).
3. Primary signal paths weighted. Feedback paths standard line weight with double arrows. Secondary signal paths standard line weight with single arrow.
4. For measurement of the +24v and +130v supplies, the power line must be at 115v±3%.
5. Mode voltages ±5% unless otherwise noted.
6. AC Ripple voltage + 15v supply 2mVp–p
   – 15v supply 4mVp–p
   +100v supply 6mVp–p

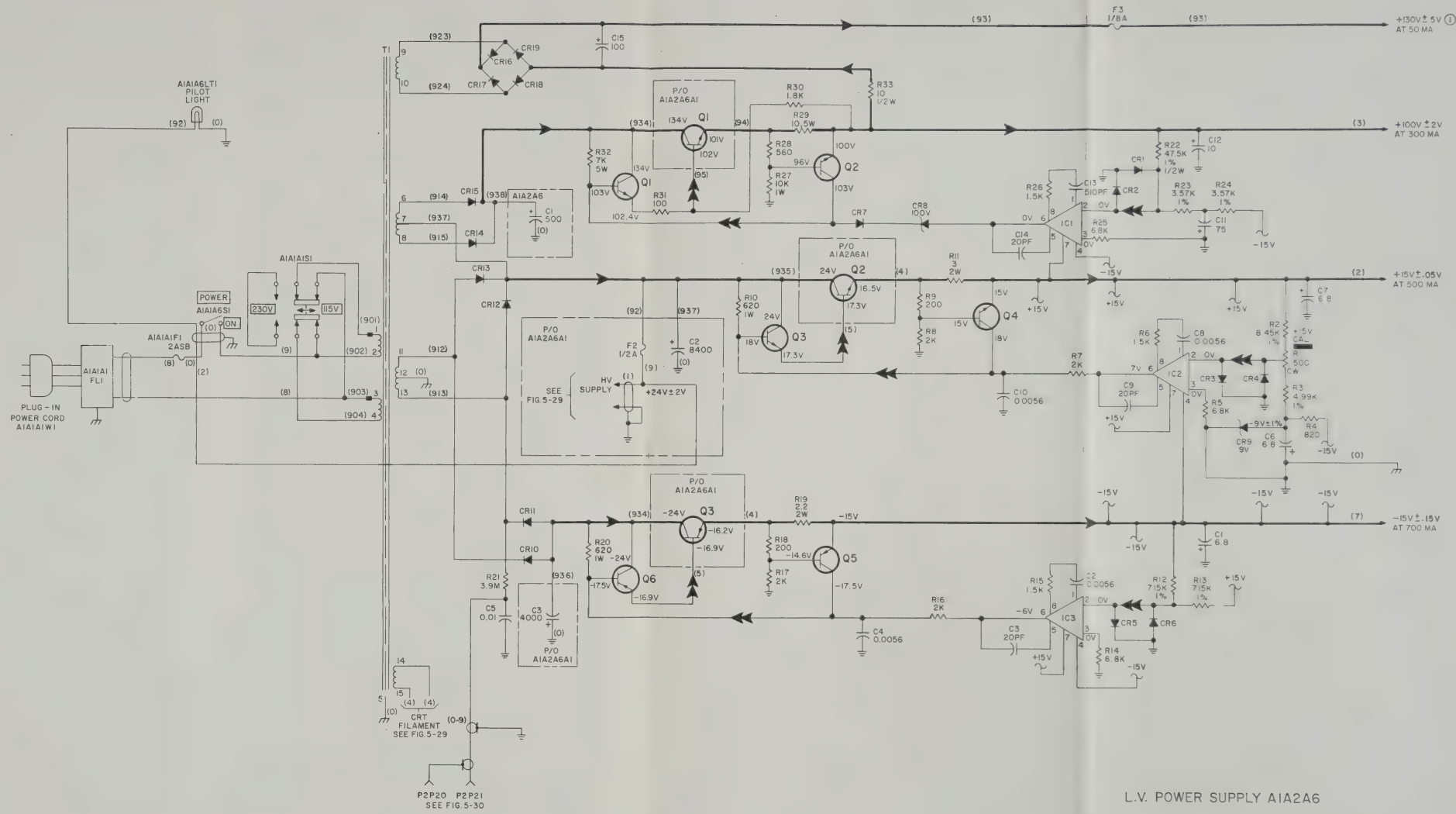

L.V. POWER SUPPLY A1A2A6

FOR USE ON AN/USM-281D CONFIGURATION ONLY. SEE FIGURE A-10 FOR AN/USM-281E CONFIGURATION.

Figure 5-28. Low Voltage Power Supply

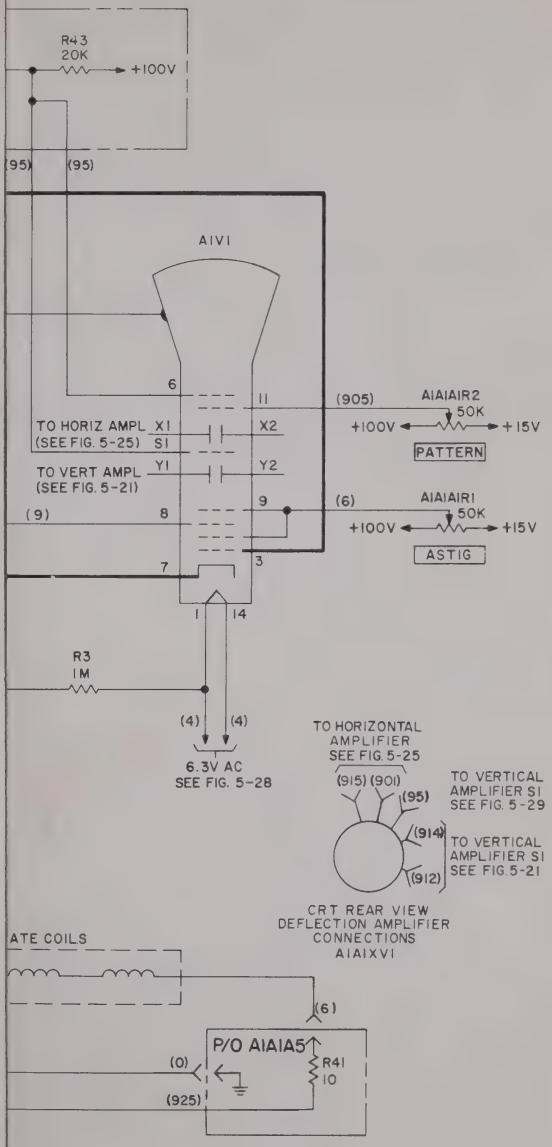

Figure 5-29. High Voltage Power Supply

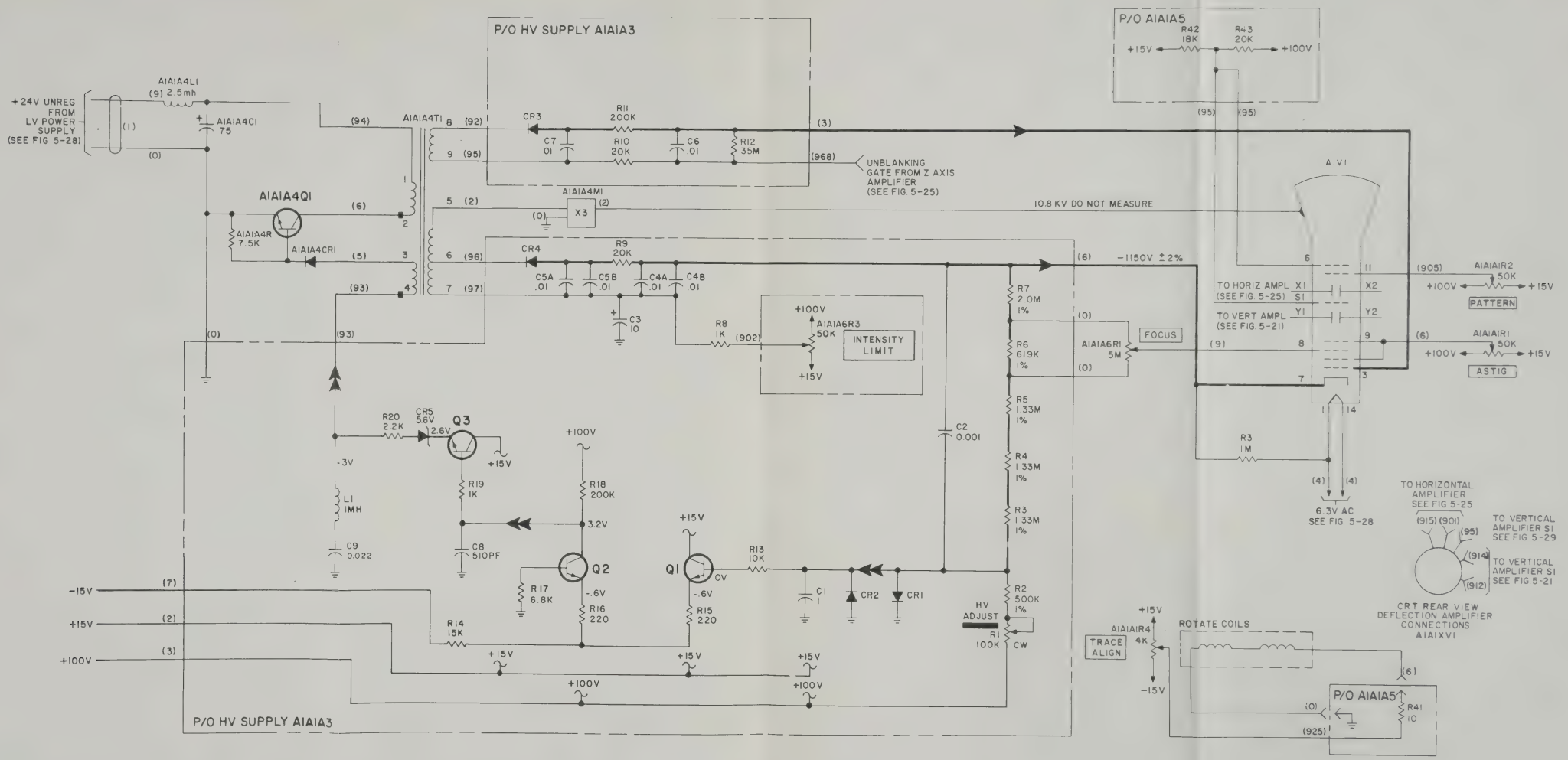

Figure 5-29. High Voltage Power Supply

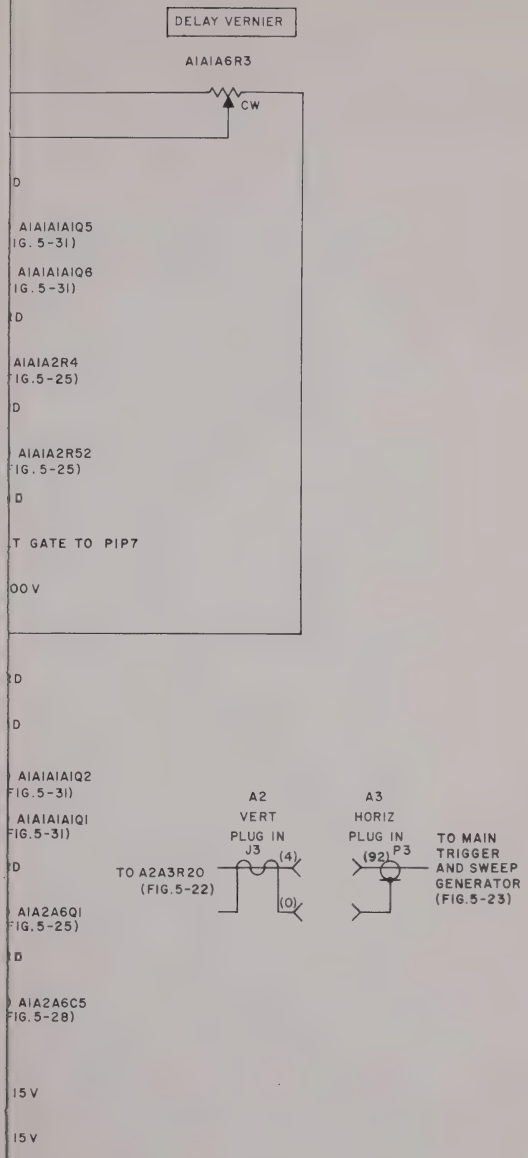

INTERCONNECTION DIAGRAM

Figure 5-30. Interconnection Diagram

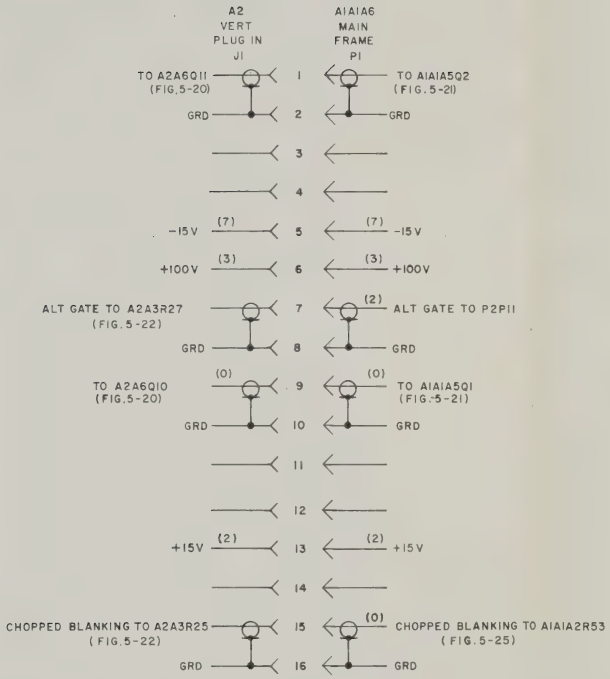

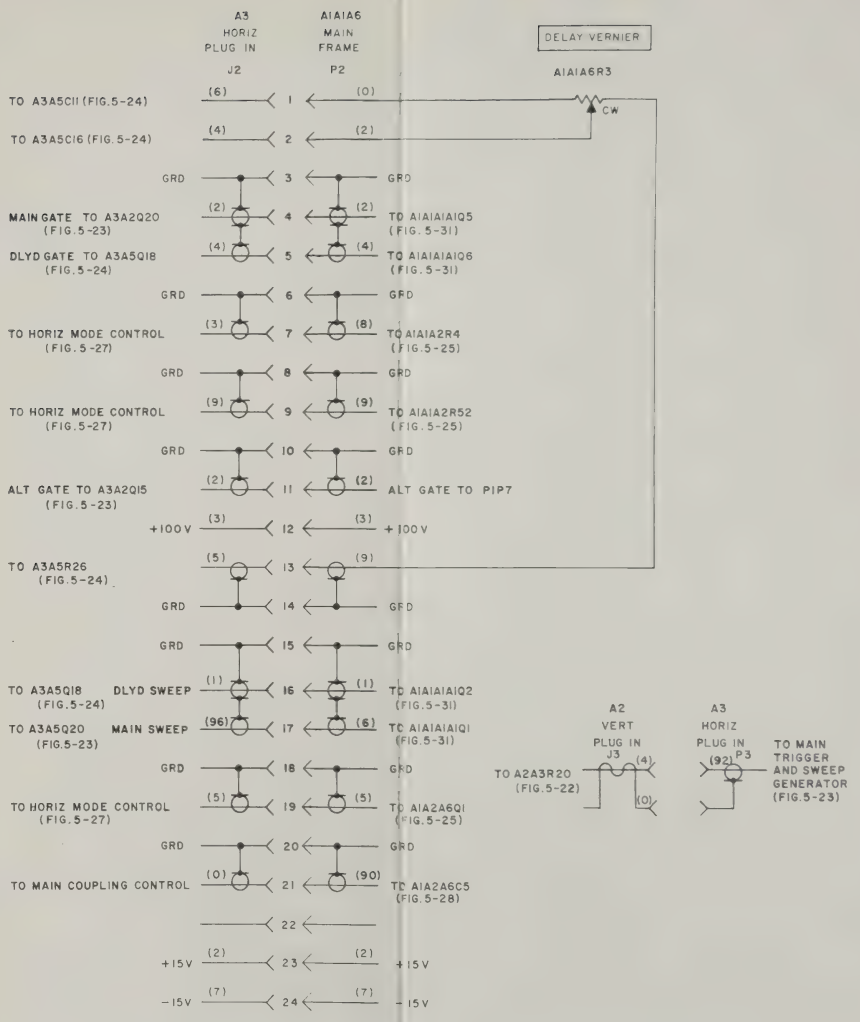

INTERCONNECTION DIAGRAM

Figure 5-30. Interconnection Diagram

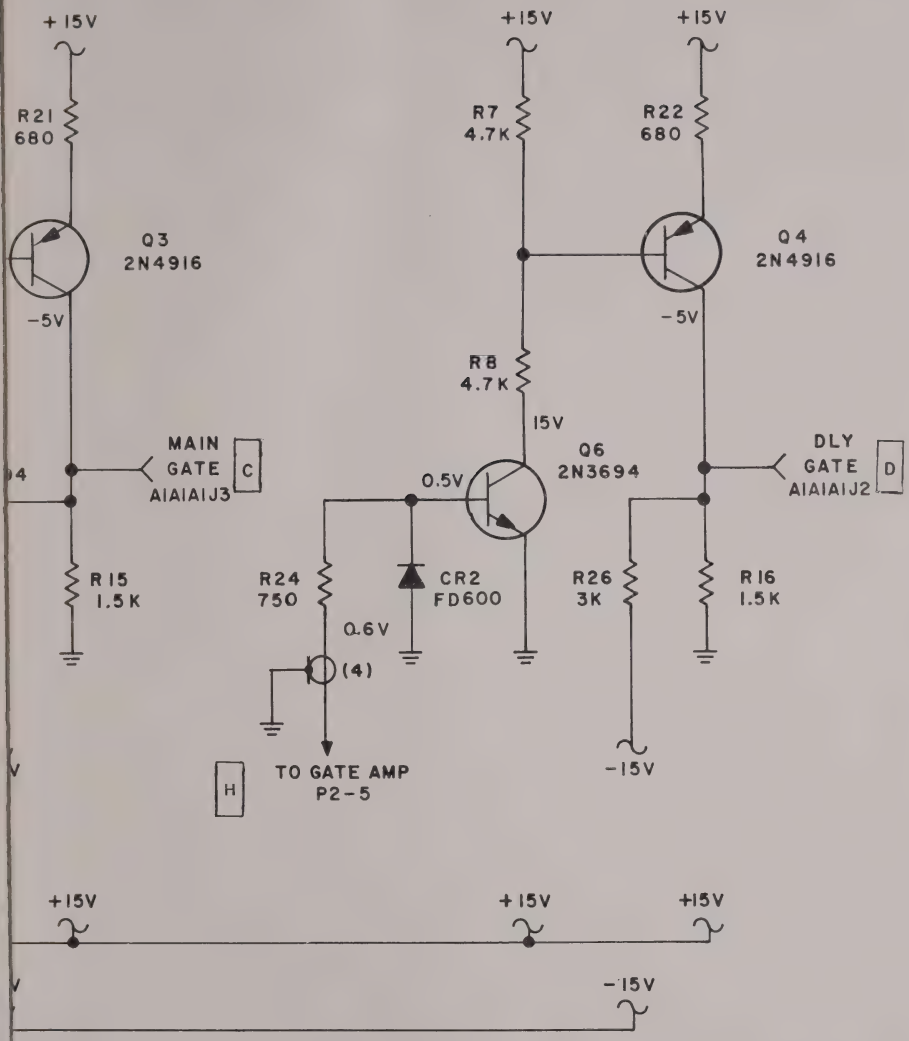

AUXILIARY OUTPUT AMPLIFIER A1A1A1A1

Figure 5-31. Auxiliary Output Amplifier

NOTES

1. Unless otherwise indicated, resistors are 1/4 watt, 5% or 1/8 watt, 1%. Capacitors are indicated in microfarads.
2. Numbers in parentheses indicate wire color using resistor color code.
   Example: White–Red–Blue is (926).
3. Primary signal paths weighted. Feedback paths standard line weight with double arrows. Secondary signal paths standard line weight with single arrow.
4. Refer to manual for procedure to measure this voltage at specified accuracy for troubleshooting use +5%.
5. Unless otherwise stated all voltages are ±5%.
6. Supply voltages +15 ±.05v
   −15 ±.15v
   +100 ±2.0v
   measured at the supply.

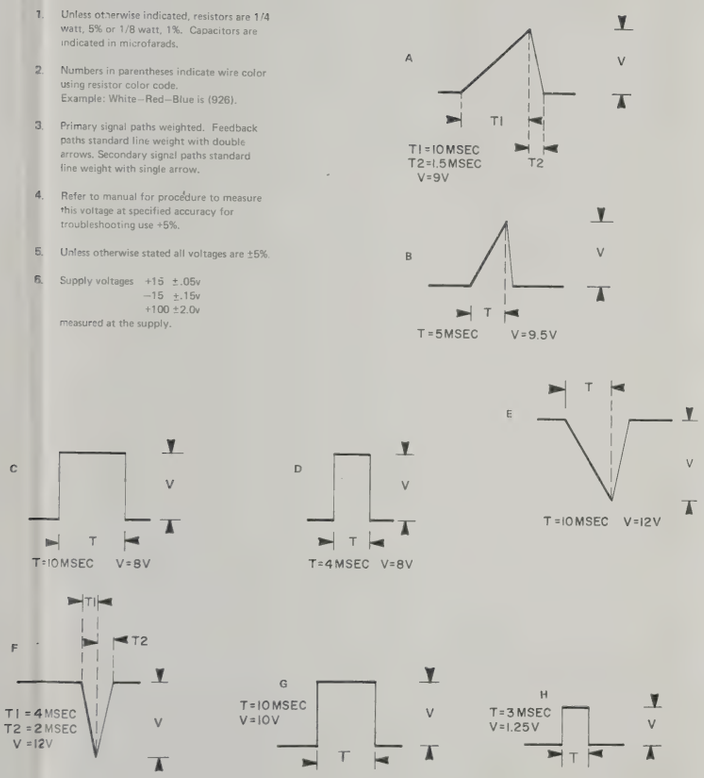

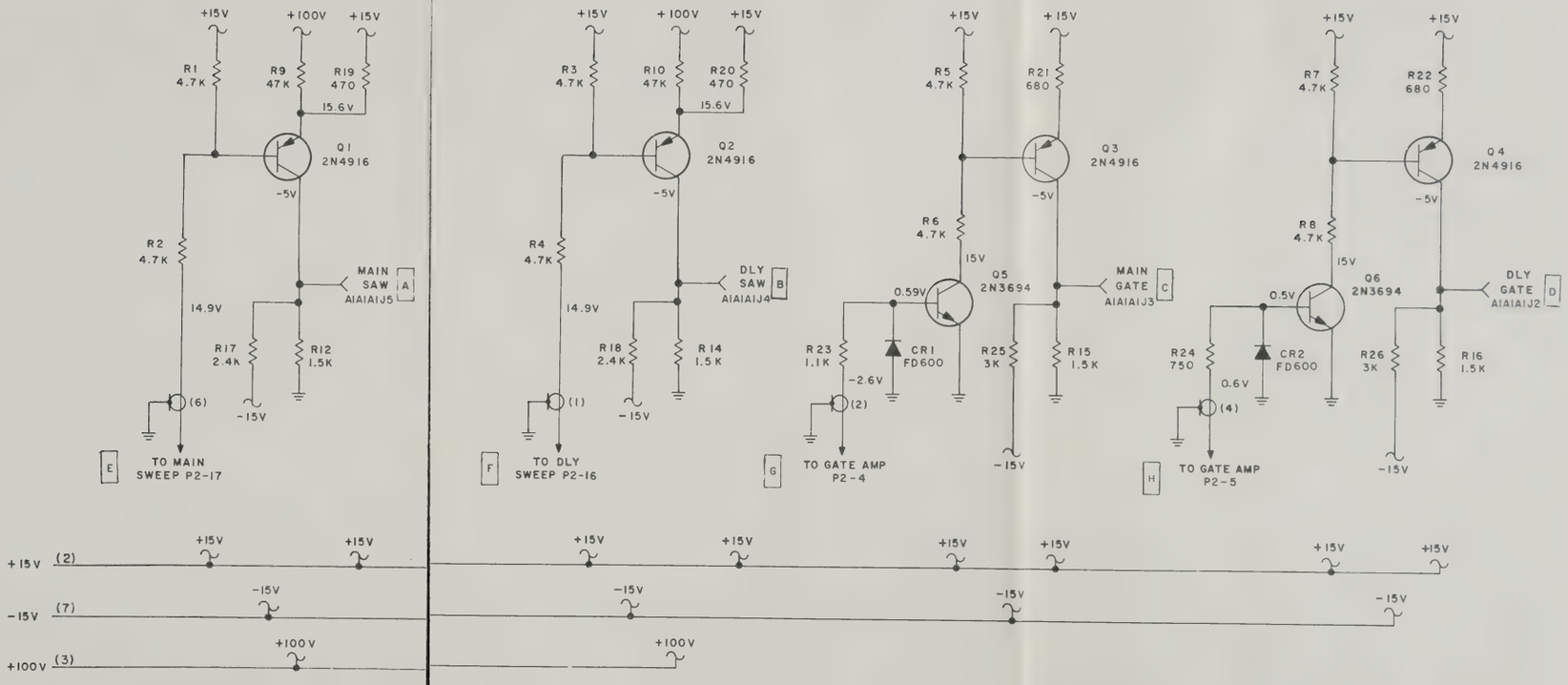

AUXILIARY OUTPUT AMPLIFIER A1A1A1A1

FOR USE ON AN/USM-281D CONFIGURATION ONLY. SEE FIGURE A-11 FOR AN/USM-281E CONFIGURATION.

Figure 5-31. Auxiliary Output Amplifier

CHAPTER 6
CORRECTIVE MAINTENANCE

6-1. INTRODUCTION.

6-2. This chapter contains corrective maintenance procedures for the AN/USM-281D Oscilloscope. Instructions include procedures to adjust and align the equipment, remove, repair, reinstall and align all repairable parts, plug-in units, and subassemblies. Chapter includes test equipment required, control settings, test setup instructions and step-by-step procedures.

Section I

ADJUSTMENTS AND ALIGNMENT

6-3. TUNING AND ADJUSTMENT. If the oscilloscope does not meet the adjustments required in this section, perform the applicable troubleshooting procedures in Chapter 5.

NOTE

The procedures in this chapter constitute the minimum number of standards which will indicate relative performance of the oscilloscope and its plug-in units. Procedures are arranged in groups associated with the functional units of the oscilloscope. The calibration and adjustment procedures are presented in the following order: Oscilloscope assembly (power supplies), rear panel adjustments, front panel adjustments, and internal adjustments. The oscilloscope assembly procedures must be performed first, with remaining units following. Adjustments must be done in the order listed, don't start procedure in mid-sequence, as succeeding steps are dependent on control settings and results of previous steps.

6-4. OSCILLOSCOPE ASSEMBLY ADJUSTMENTS.

6-5. TEST SETUP. To gain access to adjustments and test points, the oscilloscope cover and plug-in units must be removed. To install the cover and units, reverse the removal procedure

a. REMOVAL OF COVER(See figure 6-1)

(1) Disconnect ac plug from its power source

(2) Remove both front and rear covers by releasing four latches on each cover.

(3) Place oscilloscope in vertical position, on its rear panel, slide cover off.

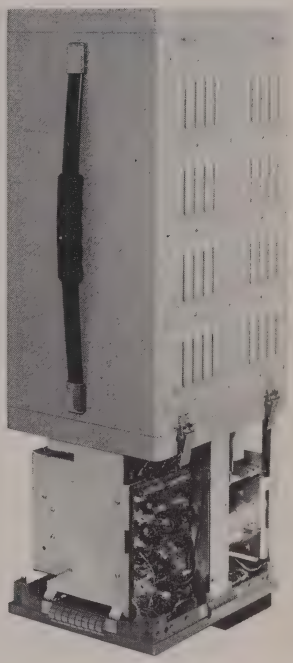

Figure 6-1. Cover Removal

b. REMOVAL OF PLUG-IN UNITS. The AM-6566/U Dual Trace Oscilloscope Plug-in Unit and the TD-1086/U Time Base-Delay Oscilloscope Plug-in Unit may be removed as follows. (See figure 6-2) Installation of units will be the reverse of the removal procedure.

(1) Turn lock on bottom of front panel CCW, pull plug-in units forward out of oscilloscope assembly.

b. Separate plug-in units by lifting both locks (located inside center panel between both plug-in units) and separate units.

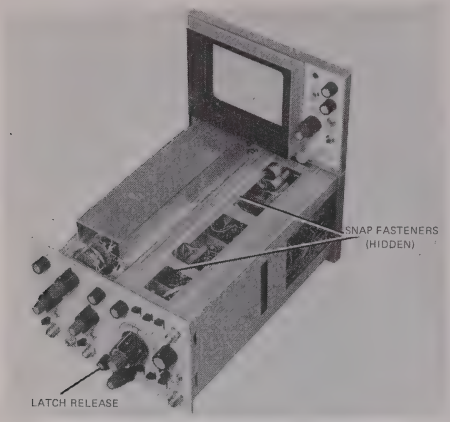

Figure 6-2. Removal of Plug-In Units

6-6. LOW VOLTAGE POWER SUPPLY ADJUSTMENT.

6-7. The low voltage power supply adjustment and test points are shown in figures 6-3, 6-4, and 5-28.

6-8. TEST EQUIPMENT. This adjustment procedure requires Digital Voltmeter Model 3440A with 3441A and AN/USM-281 Oscilloscope.

6-9. PROCEDURE.

a. Remove oscilloscope cover in accordance with paragraph 6-5.

b. Remove the four phillips-head screws in the corners of the lower back panel and pull down heat sink.

NOTE

Line voltage must be 115 volts ac when making these adjustments.

c. Turn on voltmeter(allow 5 minute warm-up time) and connect to TP1.

d. Adjust A1A2A6A1R1 for +15.00 ±0.05 volts.

e. Connect voltmeter to TP2, check voltage for -14.85 to -15.15 volts.

f. Connect voltmeter to TP3, check voltage for +98 to +102 volts.

g. Connect oscilloscope (AN/USM-281 or equivalent) to each supply +15 (TP1), -15(TP2). Verify less than 5 millivolts peak-to-peak of ripple.

h. Connect voltmeter to TP4. Verify that the voltage is between +125 and +135 volts.

i. Disconnect test equipment, turn instrument off and replace power supply heat sink back on oscilloscope by replacing the four phillips-head screws removed in step b.

6-10. HIGH VOLTAGE POWER SUPPLY ADJUSTMENT.

6-11. The high voltage power supply adjustment and test point are shown in figures 6-5, 6-6, and 5-29.

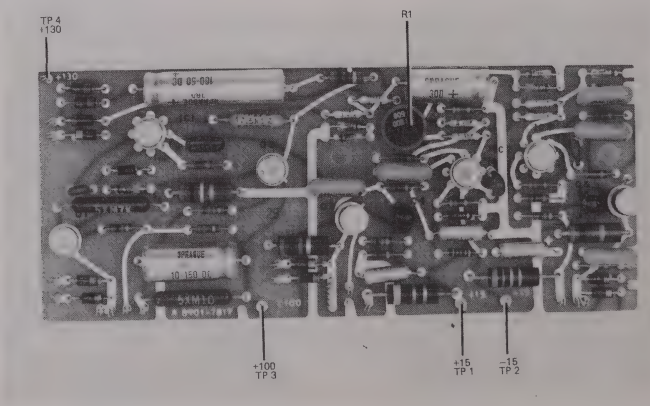

Figure 6-3. Low Voltage Power Supply, Adjustments and Test Points

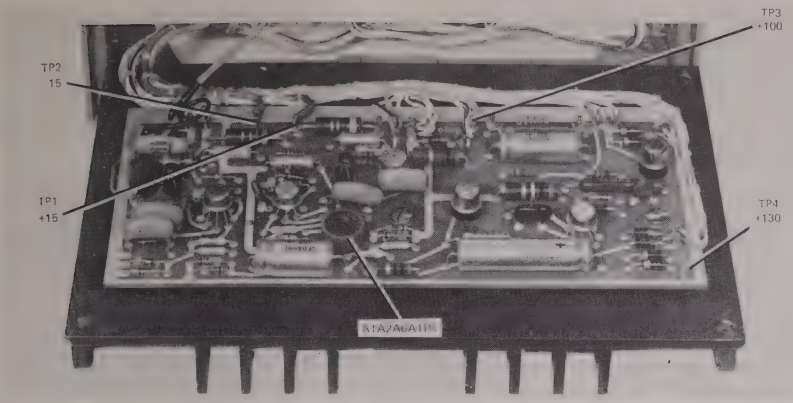

Figure 6-4. Low Voltage Power Supply Adjustments

6-12. TEST EQUIPMENT. This adjustment procedure requires Electronic Voltmeter, ME-243/FQM.

6-13. PROCEDURE.

a. Remove the oscilloscope cover as described in paragraph 6-5.

b. Remove two hex-head screws on high voltage cover and rotate out the high voltage regulator assembly A1A1A3.

c. Remove the four phillips-head screws on the oscilloscope upper rear panel and pull down panel.

d. Connect HV Voltmeter to pin number 7 of the CRT socket. (See figure 6-5.)

WARNING

High voltages are present. Use extreme caution while performing following steps.

e. Turn PWR switch ON. Allow 15 minute warmup before proceeding.

f. Adjust A1A1A3R1 for -1150 volts.

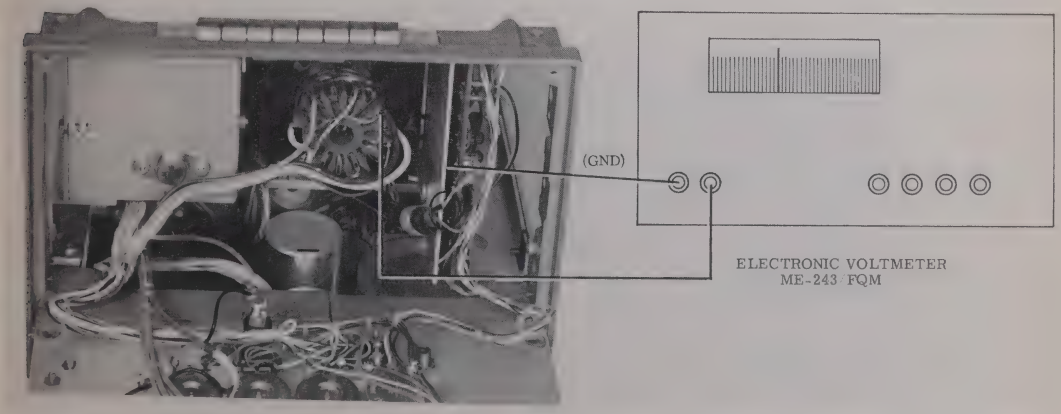

Figure 6-5. High Voltage Power Supply, Test Setup

g. Rotate FOCUS control fully CW or CCW to defocus trace, set HORIZ MODE switch to EXT HOR. Vary INTENSITY control through its full range. Verify that -1150 volts does not vary.

h. Disconnect test equipment and remount the upper rear panel and high voltage cover removed in steps b and c.

6-14. INTENSITY LIMIT AND ASTIGMATISM ADJUSTMENTS. The intensity limit and astigmatism adjustments are shown in figure 5-29.

6-15. PROCEDURE.

a. Turn PWR switch ON. Allow 5 minute warmup before proceeding.

b. Set AC-GND-DC switch to GND.

c. Set HORIZ MODE switch to EXT HOR.

d. Set front panel controls as follows:
VOLTS/DIV to 0. 1
Vernier portion of VOLTS/DIV switches to CAL
VERTICAL MODE to CH1 or CH2
TRIG MODE - DSPLY
AUTO-TRIG-SINGLE - AUTO
TIME/DIV - 0. 2 mSEC
COUPLING - AC
SLOPE - +
SOURCE - INT
HORIZ POSITION vernier - push in; CH1 POSITION - center trace on CRT

e. Adjust INTENSITY LIMIT on rear panel until the spot on CRT is very dim.

f. Adjust ASTIG ADJ control on rear panel and FOCUS control on front panel until the spot is as small and round as possible.

g. Rotate INTENSITY control on front panel fully CCW and adjust INTENSITY LIMIT until spot just disappears.

6-16. TRACE ALIGNMENT. The trace alignment control is shown in figure 5-29.

6-17. PROCEDURE.

a. Turn PWR switch ON. Allow 5 minute warmup before proceeding.

b. Set front panel controls as follows:
AC-GND-DC to DC
VOLTS/DIV switches to 0. 1
Vernier portion of VOLTS/DIV switches to CAL
VERTICAL MODE to CH1 or CH2
TRIG MODE - DSPLY
HORIZ MODE - NORM
AUTO-TRIG-SINGLE - AUTO
TIME/DIV - 0. 2 mSEC
COUPLING - AC
SLOPE - +
SOURCE - INT
HORIZ POSITION vernier - push in; CH1 POSITION - center trace on CRT

c. Center trace on center graticule with CH1 POSITION control.

d. Adjust TRACE ALIGN at rear of oscilloscope until trace is parallel to graticule line.

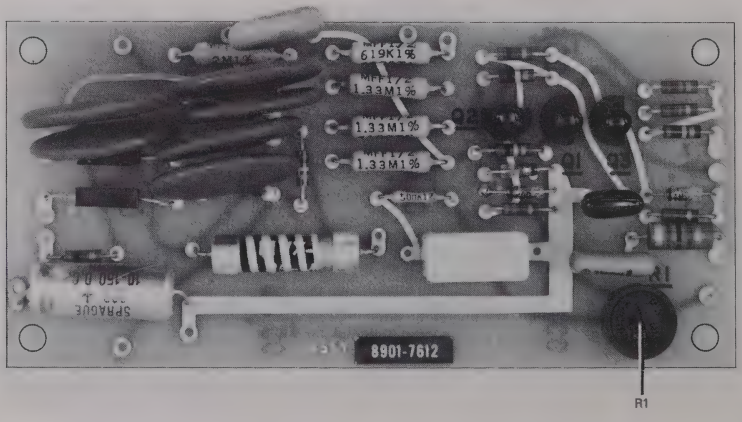

Figure 6-6. High Voltage Power Supply Adjustment

6-18. PATTERN ADJUSTMENT. The pattern adjustment control is shown in figure 5-29.

6-19. PROCEDURE.

a. Turn PWR switch ON. Allow 5 minute warmup before proceeding.

b. Front panel controls should be set as follows:

AC-GND-DC to DC
VOLTS/DIV switches to . 05
Vernier portion of VOLTS/DIV switches to CAL
VERTICAL MODE to CH1 or CH2
TRIG MODE - DSPLY
HORIZ MODE SWITCH - NORM
AUTO-TRIG-SINGLE - AUTO
TIME/DIV - 0. 2 mSEC
COUPLING - AC
SLOPE - +
SOURCE - INT
HORIZ POSITION vernier - push in; CH1 POSITION - center trace on CRT

c. Position trace to uppermost graticule line and adjust PATTERN ADJUST (on rear panel) until trace is straight without any bowing.

d. Set HORIZ MODE SWITCH to EXT HOR and SOURCE to EXT.

e. Connect channel 1 INPUT to 300 MV CAL.

f. Adjust HOR POSITION so that trace is at the right edge graticule line.

g. Readjust PATTERN ADJUST to eliminate bowing.

NOTE

Repeat steps b through g to compromise between the horizontal-vertical pattern to provide the best rectangular pattern.

6-20. VERTICAL CHANNEL DC BALANCE ADJUSTMENT. The vertical DC balance adjustment is shown in figures 5-19 and figure 2-1(27 & 33)

6-21. PROCEDURE.

a. Set front panel controls as follows:

AC-GND-DC to DC
VOLTS/DIV switches to . 05
Vernier portion of VOLTS/DIV switches to CAL
VERTICAL MODE to CH1
TRIG MODE - DSPLY
HORIZ MODE CONTROL SWITCH -NORM
AUTO-TRIG-SINGLE - AUTO
TIME/DIV - 0. 2 mSEC
COUPLING - AC
SLOPE - +
SOURCE - INT
HORIZ POSITION vernier - push in; CH1 POSITION - center trace on CRT

b. Turn vernier portion of VOLTS/DIV controls from CAL position to the maximum CCW position. Note position of the trace and return the vernier knob to CAL position.

c. Adjust BAL control until the trace returns to the DC Null position. Repeat until no trace displacement is observed when the vernier is turned from the CAL position to the full CCW position. Set VERT MODE to CH2 and repeat steps b and c for CH 2.

6-22. VERTICAL AMPLIFIER GAIN ADJUSTMENTS. The vertical amplifier adjustments are shown in figures 6-7 and 5-22.

6-23. TEST EQUIPMENT. These adjustments require voltmeter AN/USM-183.

6-24. PROCEDURE.

a. Remove oscilloscope cover as described in paragraph 6-5.

b. Turn PWR switch ON. Allow 15 minute warmup before proceeding.

c. Set front panel controls as follows:

AC-GND-DC to DC
VOLTS/DIV to . 01
Vernier portion of VOLTS/DIV to CAL
VERTICAL MODE to CH2
TRIG MODE to DSPLY
HORIZ MODE CONTROL SWITCH-NORM
AUTO-TRIG-SINGLE to AUTO
COUPLING to DC
SLOPE to +
SOURCE to INT
TIME/DIV to 1 mSEC
Vernier portion of TIME/DIV to CAL
X10 GAIN portion of HORIZ POSITION push in
HORIZ POSITION center trace on CRT

d. Connect voltmeter AN/USM-183 between junction of A2A3R9, A2A3R20 and chassis

ground, see figure 6-7, set voltmeter range to 3 vdc.

e. VERT BAL adjustment as given in paragraph 6-20 must be performed before proceeding.

f. Adjust trigger BALANCE ADJUST control A2A3R1 for zero volts on voltmeter. (See figures 5-22 and 6-7)

g. Set VERTICAL MODE to CH 1.

h. Adjust channel 1 TRIGGER BALANCE control A2A6R54 for zero volts on voltmeter. (See figures 5-20 and 6-11)

i. Disconnect voltmeter from oscilloscope.

j. Connect CAL 300 MV to channel 1 INPUT jack, set VOLTS/DIV (channel 1) switch to . 05.

k. Adjust CAL control (channel 1) to exactly 6 centimeters of deflection.

l. Connect CAL 300 MV to channel 2 INPUT jack, set VOLTS/DIV(CH 2) switch to 0. 05.

m. Adjust CAL control (to calibrate null channel 2 against channel 1 in ADD Mode).

n. Replace oscilloscope cover.

6-25. VERTICAL POSITION CENTERING ADJUSTMENT. The vertical position centering adjustment is shown in figures 6-8, 6-9, and 5-21.

NOTE

See Appendix A for Vertical Position Centering Adjustment for the AN/USM-281E configuration.

6-26. TEST EQUIPMENT. This adjustment procedure requires Oscillator 0-1025/U.

6-27. PROCEDURE.

a. Remove the oscilloscope cover as described in paragraph 6-5.

b. Turn PWR switch ON. Allow 15 minute warmup before proceeding.

c. Set front panel controls as follows:

VERTICAL MODE to CH1
VOLTS/DIV switch to 0. 1

d. Connect the oscillator to channel 1 INPUT, set frequency to 1 kHz and adjust level to provide 8 centimeters of deflection.

e. Set VOLTS/DIV switch to . 05 and CH1 POSITION fully CW.

f. Adjust POSITION CENTERING ADJUST control A1A1A5R3 until the negative peaks of the

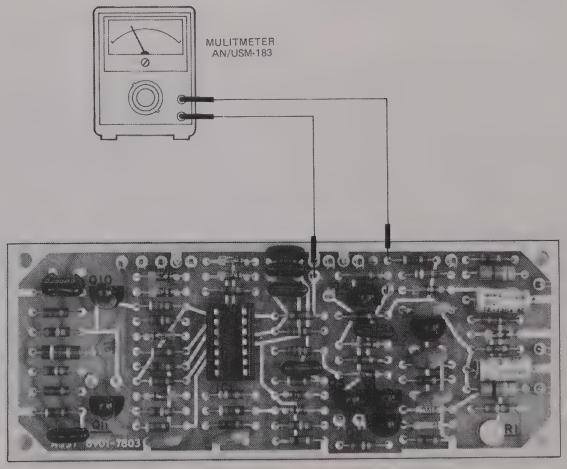

Figure 6-7. Vertical Amplifier Adjustment, Test Setup

sine wave are 2 centimeters above the center graticule. From this point, adjust CH1 POSITION control between the fully CW and CCW position and adjust A1A1A5R3 until the positive peaks with the CH1 POSITION control fully CCW are the same distance below the center graticule as the negative peaks with the CH1 POSITION control fully CW are above the center graticule.

g. Remove the equipment and replace oscilloscope cover.

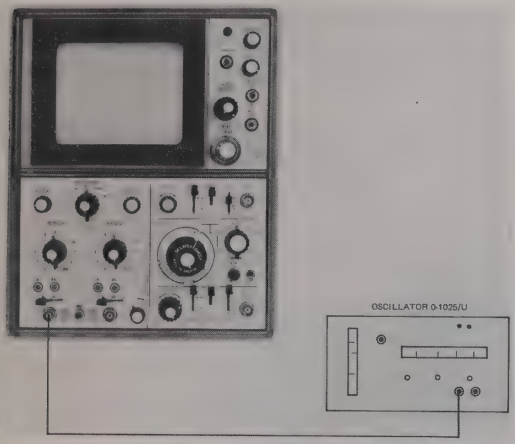

Figure 6-8. Vertical Position Centering Adjustment, Test Setup

6-28. DELAY LINE TERMINATION ADJUSTMENT. The delay line termination adjustments are shown in figures 5-20, 5-21, 6-10 and 6-11.

6-29. TEST EQUIPMENT. These adjustment procedures require Hewlett-Packard Square Wave Generator Model 211B, Hewlett-Packard 50-ohm Termination Model 10100A, and Hewlett-Packard Pulse Generator Model 8000A.

6-30. PROCEDURE.

a. Remove oscilloscope cover as described in paragraph 6-5.

b. Turn PWR switch ON. Allow 5 minute warmup before proceeding.

c. Set front panel controls as follows:
AC-GND-DC to DC
VOLTS/DIV to . 005
Vernier portion of VOLTS/DIV to CAL
VERTICAL MODE to CH1
TRIG MODE to DSPLY
TIME/DIV to 1 uSEC

d. Connect Square Wave Generator through 50-ohm termination to channel 1 INPUT.

e. Set generator frequency to 1 mHz. Adjust generator level to provide 6 centimeters of deflection.

f. Adjust HF ADJUST control A1A1A5C9 for a flat-topped square wave.

g. Set RESP ADJUST controls A2A6R40 and A2A6R101 to mid-range.

h. Connect Pulse Generator through 50-ohm termination to channel 1 INPUT.

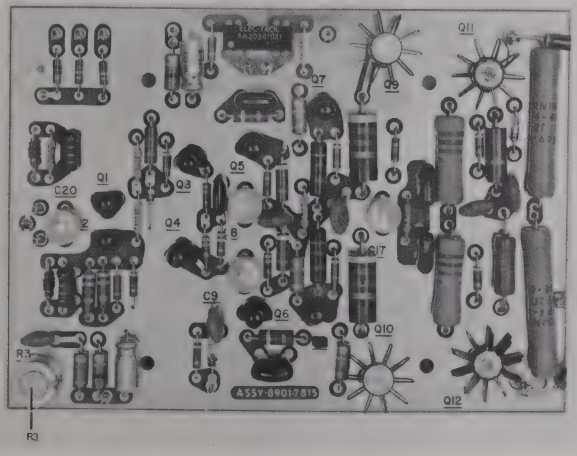

Figure 6-9. Vertical Position Centering Adjustments

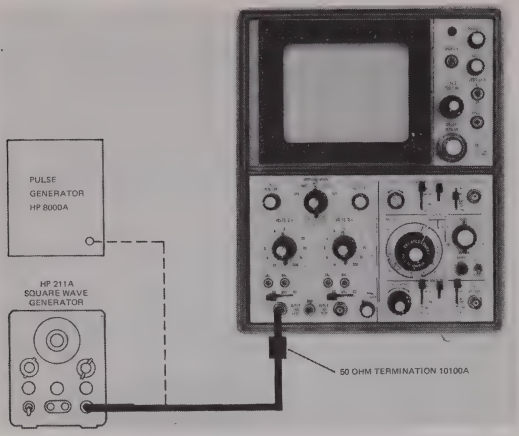

Figure 6-10. Delay Line Termination Adjustment, Test Setup

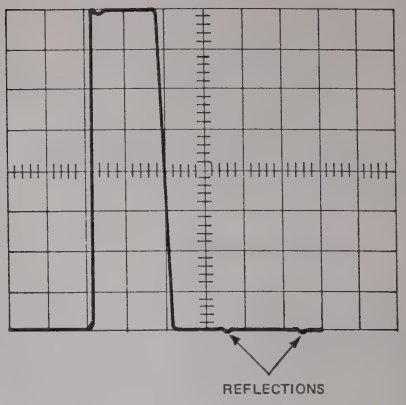

Figure 6-12. Delay Line Termination Adjustment Reflections

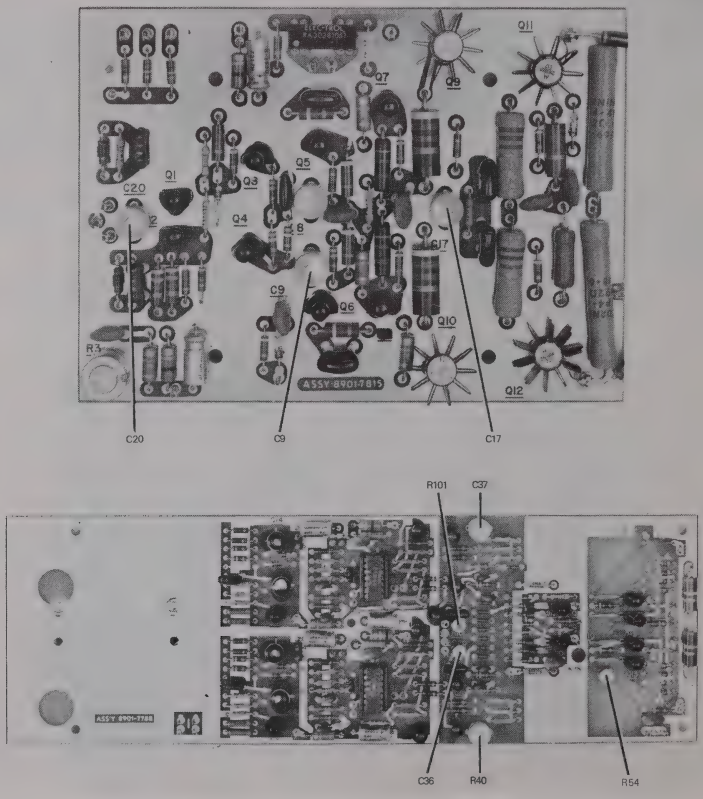

Figure 6-11. Delay Line Termination Adjustments

i. Set TIME/DIV to 0.1 uSEC. Adjust DELAY LINE TERMINATION ADJUST control A1A1A5C20 to minimize delay line reflections. See figure 6-12.

j. Adjust HF ADJUST control A1A1A5C17 for a flat top on the pulses.

k. Set HF ADJUST control A2A6C36 approximately to its mid-range.

l. Adjust HF ADJUST control for fastest rise time with approximately 0.25 centimeter of ringing and overshoot.

m. Pull HORIZ POSITION - X10 GAIN control and note a rise time of less than 7.0 ns. Push in HORIZ POSITION - X10 GAIN control.

n. Connect Pulse Generator through 50-ohm termination to channel 2 INPUT.

o. Set VERTICAL MODE to CH2.

p. Adjust HF ADJUST A2A6C37 for fastest rise time with minimum overshoot.

q. Pull HORIZ POSITION - X10 GAIN control and note a rise time of less than 7.0 ns. Push in HORIZ POSITION - X10 GAIN control.

r. Disconnect test equipment and replace oscilloscope cover.

6-31. ATTENUATOR AND INPUT CAPACITANCE ADJUSTMENTS. The attenuator and input capacitance adjustments are shown in figures 6-13, 6-14, and 5-19.

NOTE

See Appendix A for Attenuator and Input Capacitance Adjustments for AN/USM-281E configuration.

6-32. TEST EQUIPMENT. These adjustment procedures require Tektronix LC Meter Type 130, Hewlett-Packard Square Wave Generator Model 211B and a 10 db pad.

6-33. PROCEDURE.

a. Remove oscilloscope cover as described in paragraph 6-5.

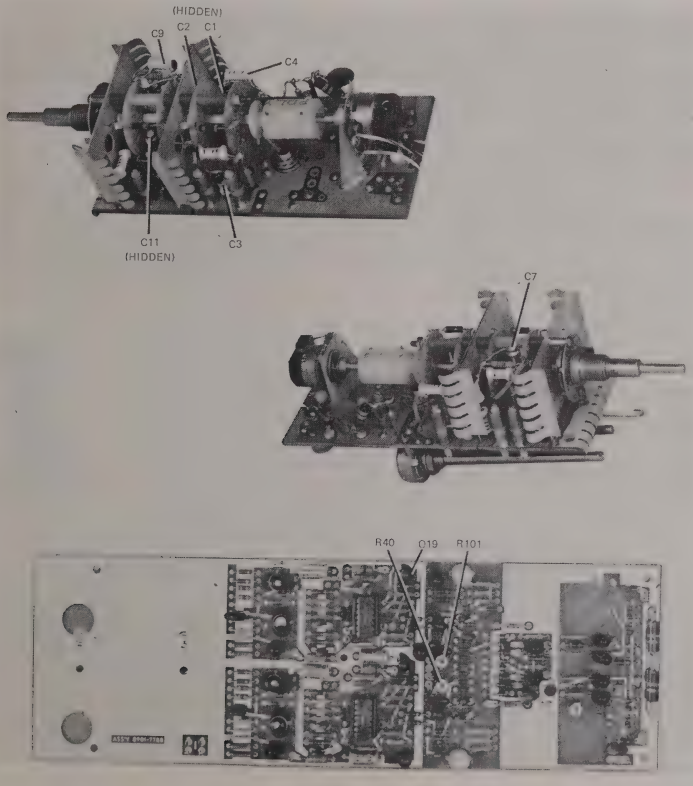

Figure 6-13. Attenuator and Input Capacitance Adjustments

b. Turn PWR switch ON. Allow 5 minute warmup before proceeding.

c. Set front panel controls as follows:
VERTICAL MODE to CH1
AC-GND-DC to DC
VOLTS/DIV to . 005
Vernier portion of VOLTS/DIV to CAL

NOTE

Capacitors to be adjusted to calibrate the attenuators are listed in Table 6-1 with corresponding identification code numbers as they appear on the attenuator assembly. See figures 6-13, 7-13, 7-14, and 7-15.

d. Connect LC meter to INPUT BNC connector.

e. Adjust channel 1 attenuator INPUT CAP ADJUST A2A7A2C11 for 24 pf reading.

f. Set Generator at 10 kHz for channel 1 INPUT through a 10 db pad.

g. Set VOLTS/DIV switch to . 01.

h. Adjust RESPONSE ADJUST attenuator A2A7A2C3 for a flat-topped square wave.

i. Adjust RESP ADJUST A2A6R40 to remove high frequency peak from square wave.

j. Set VOLTS/DIV switch to . 02.

k. Adjust RESP ADJUST attenuator A2A7A1C1 for a flat-topped square wave.

l. Set VOLTS/DIV switch to . 05.

m. Adjust RESP ADJUST attenuator A2A7A1C7 for a flat topped square wave.

n. Set VOLTS/DIV switch to 0. 1.

o. Adjust INPUT CAP ADJUST attenuator A2A7A2C2 for a flat-topped square wave.

p. Set VOLTS/DIV switch to 0. 2.

q. Adjust INPUT CAP ADJUST attenuator A2A7A2C4 for a flat-topped square wave.

r. Set VOLTS/DIV switch to 0. 5.

s. Connect Square Wave Generator directly to channel 1 INPUT.

t. Adjust RESPONSE ADJUST A2A7A1C9 for a flat-topped square wave.

u. Set VOLTS/DIV switch to 5.

v. Adjust RESPONSE ADJUST A2A7A1C11 for a flat-topped square wave.

w. Connect LC meter to BNC connector.

x. Set VOLTS/DIV switch to . 05.

y. Adjust INPUT CAP ADJUST A2A7C6 for 24 pf reading.

z. Set VOLTS/DIV switch to 0. 5.

aa. Connect LC Meter to channel 1 INPUT.

ab. Adjust INPUT CAP ADJUST A2A7A2C8 for 24 pf reading.

ac. Set VOLTS/DIV switch to 5.

ad. Adjust INPUT CAP ADJUST A2A7A2C10 for 24 pf reading.

ae. Disconnect test equipment and replace oscilloscope cover.

NOTE

For attenuator and input capacitance adjustments for channel 2, repeat steps 4 through 31, except adjust RESP ADJUST A2A6R101 in step i. All A2A7 reference designations for channel 1 are A2A8 for channel 2.

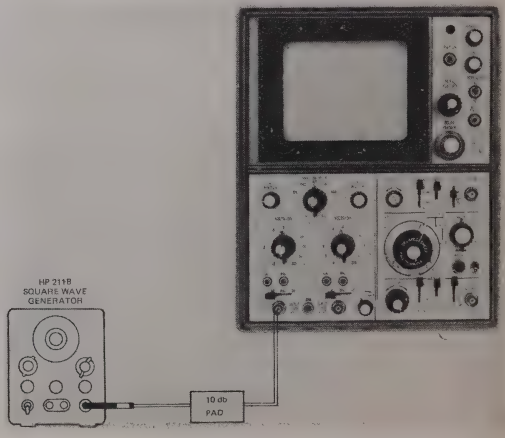

Figure 6-14. Attenuator and Capacitance Adjustment, Test Setup

6-34. TRIGGER SYNCHRONIZATION ADJUSTMENT. Trigger synchronization adjustment is shown in figure 6-15 and 5-23.

6-35. TEST EQUIPMENT. This adjustment requires Digital Voltmeter/Ammeter, Hewlett-Packard 3440A with a 3441A plug-in assembly.

6-36. PROCEDURE.

a. Remove oscilloscope cover as described in paragraph 6-5.

b. Turn PWR switch ON. Allow 15 minute warmup before proceeding.

c. Set front panel controls as follows:
INTENSITY to full CCW position
AC-GND-DC to DC
VOLTS/DIV to 2
Vernier portion of VOLTS/DIV to CAL
VERTICAL MODE to CH1
TRIG MODE to DSPLY
TIME/DIV to 1 mSEC
Vernier portion of TIME/DIV to CAL
HORIZ MODE to EXT HOR
AUTO-TRIG-SINGLE to SINGLE
COUPLING to AC
SLOPE to +
SOURCE to EXT
LEVEL to 0
HORIZ POSITION - X10 GAIN push in

d. Connect voltmeter between center wiper of LEVEL control and chassis ground.

NOTE

Connection to center arm of LEVEL control can be obtained by connecting to the main sweep board at wire 958 (A3A2R18).

e. Adjust LEVEL to provide 0 ± .05 volts.

f. Connect CAL 300 MV to channel 1 INPUT, set AUTO-TRIG-SINGLE to AUTO, adjust VOLTS/DIV and its vernier to provide 0.3 centimeter of vertical deflection.

g. If trace is out of synchronization, adjust ZERO BIAS ADJ A3A2R1 to synchronization.

h. Reset AUTO-TRIG-SINGLE to SINGLE, VOLTS/DIV to 2 and its vernier to CAL.

6-37. HORIZONTAL SWEEP AND TRIGGER ADJUSTMENTS. The horizontal sweep and trigger adjustments are shown in figures 6-16 and 5-23.

6-38. TEST EQUIPMENT. These adjustment procedures require Digital Voltmeter/Ammeter, Hewlett-Packard 3440A.

6-39. PROCEDURE.

a. Remove oscilloscope cover as described in paragraph 6-5.

b. Turn PWR switch ON. Allow 15 minute warmup before proceeding.

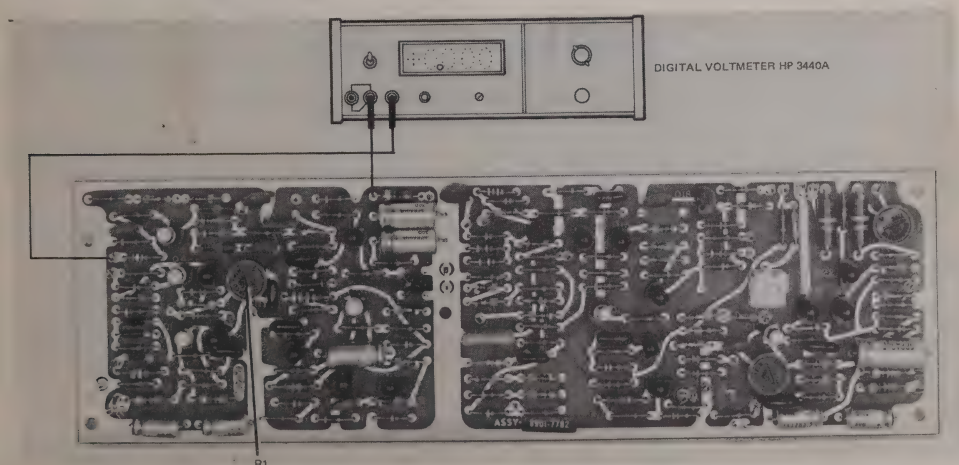

Figure 6-15. Trigger Synchronization Adjustment

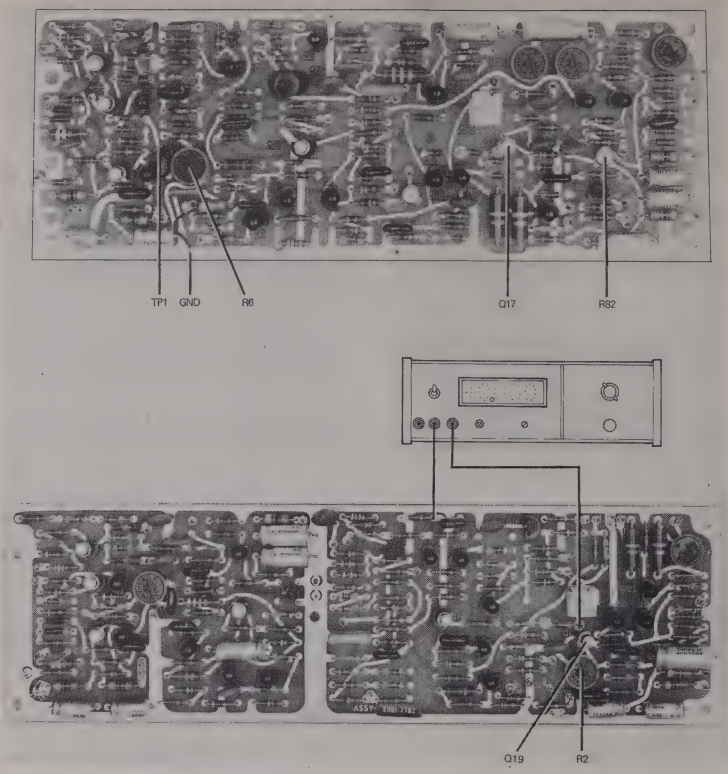

Figure 6-16. Horizontal Sweep and Trigger Adjustments

c. Connect voltmeter between case of A3A2Q19 and chassis ground. See figure 6-16.

d. Adjust FET BIAS ADJ A3A2R2 for -0.25 volts.

e. Connect voltmeter between A3A5TP1 and chassis ground.

f. Adjust TRIG LEVEL CENTERING ADJ A3A5R6 for +.65V ± .01 volts.

g. Connect voltmeter between case of A3A5Q17 and chassis ground.

h. Adjust FET BIAS ADJ A3A5R82 to -0.25 volts.

i. Disconnect voltmeter and replace oscilloscope cover.

6-40. HORIZONTAL AMPLIFIER ADJUSTMENT. The horizontal amplifier test points are shown in figures 6-17 and 5-25.

6-41. TEST EQUIPMENT. These procedures require Digital Voltmeter/Ammeter, Hewlett-Packard 3440A.

6-42. PROCEDURE.

a. Remove oscilloscope cover as described in paragraph 6-5.

b. Turn PWR switch ON. Allow 15 minute warmup before proceeding.

c. Connect "balanced" voltmeter between A1A1A2Q7 collector and A1A1A2Q10 collector. Adjust HORIZ POSITION until there is less than 0.5 volts difference.

NOTE

Do not readjust HORIZ POSITION control until after step f.

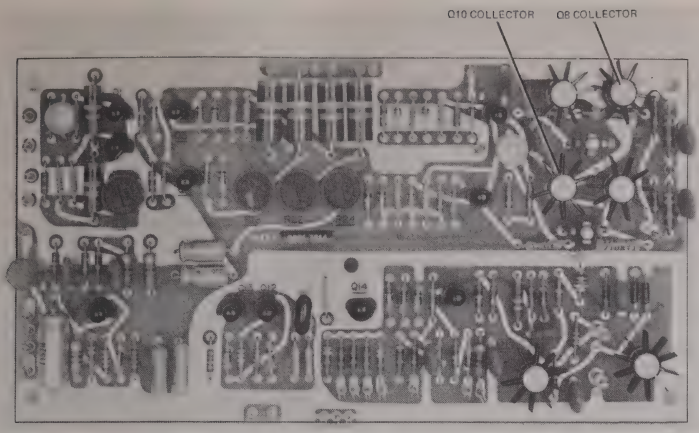

Figure 6-17. Horizontal Amplifier Adjustment

d. Increase INTENSITY very slowly until a dim spot appears on the CRT. Ascertain that spot is within an area ± 0.5 centimeter from the center vertical graticule line.

e. Connect voltmeter between A1A1A2Q7 collector and chassis ground.

f. Adjust CRT BIAS ADJ A1A1A2R12 for 50 ± 0.2 volts.

g. Disconnect voltmeter.

h. Pull HORIZ POSITION - X10 GAIN control and set spot exactly on center graticule line with HORIZ POSITION. control. Push in X10 GAIN and readjust with R24. Repeat till no shift noticed.

i. Replace oscilloscope cover.

6-43. HORIZONTAL SWEEP ADJUSTMENTS. The horizontal sweep adjustments are shown in figures 6-18, 6-19, 5-23 and 5-25.

6-44. TEST EQUIPMENT. These procedures require Time Mark Generator, Tektronix Type 180A.

6-45. PROCEDURE.

a. Remove oscilloscope cover as described in paragraph 6-5.

b. Turn PWR switch ON. Allow 15 minute warmup before proceeding.

c. Set front panel controls as follows:
AUTO-TRIG-SINGLE to AUTO
HORIZ MODE to NORM
INTENSITY as desired
SOURCE to INT
HORIZ POSITION - X10 GAIN push in

d. Connect time mark generator to channel 1 INPUT. Set generator to 1 mSEC and adjust LEVEL to synchronize trace. Set AUTO-TRIG-SINGLE to TRIG.

e. Adjust X1 GAIN CAL A1A1A2R22 to provide approximately 10.5 centimeters of sweep length.

f. Adjust MAIN SWEEP CAL A3A2R3 to give a time mark on every major vertical graticule line.

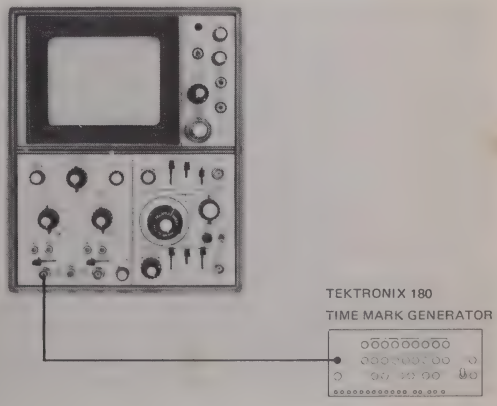

Figure 6-18. Horizontal Sweep Adjustment, Test Setup

g. Pull HORIZ POSITION - X10 GAIN control and set generator to 100 nSEC.

h. Adjust X10 GAIN CAL A1A1A2R16 to give a time mark on every major vertical graticule line. Push X10 gain in.

i. Set TIME/DIV to 1 uSEC.

j. Adjust HF CAL A3A2C1 to give a time mark on every major vertical graticule line.

k. Set TIME/DIV to 0. 1 uSEC and pull HORIZ POSITION - X10 GAIN control.

l. Set generator to give a 50 mHz signal.

m. Adjust HF ADJUST A1A1A2C9 to provide a full cycle of signal at the center of 2 centimeters of deflection.

n. Alternately adjust HF ADJUST controls A1A1C2C9, A1A1C2C8 and A1A1C2C10 to provide CRT display as shown in figure 6-20.

o. Set trigger level HORIZ GAIN to max. gain. Connect termination 50 ohm, 50 KC signal to EXT HOR (21) and horiz mode to x amp and set for 6cm deflection.

p. Set signal generator to 5 MC. Adjust C25 for 4. 25 divisions.

q. Disconnect generator and replace oscilloscope cover.

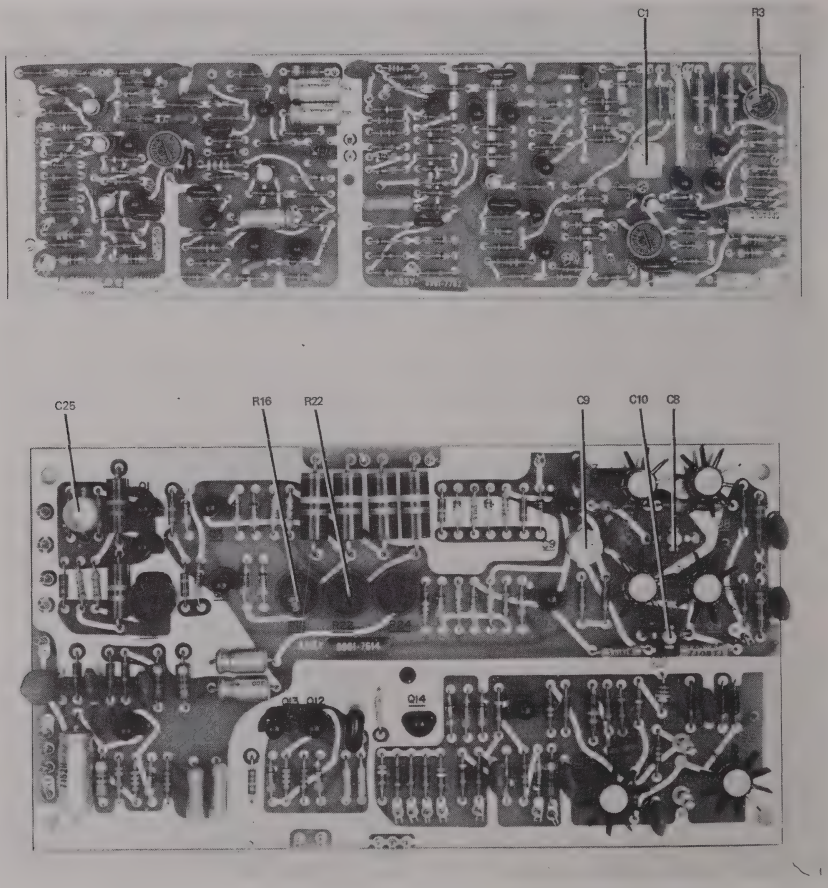

Figure 6-19. Horizontal Sweep Adjustment, Test Points

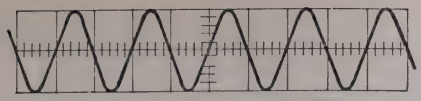

Figure 6-20. Horizontal Sweep Adjustment, CRT Display

6-46. DELAYED TRIGGER AND SWEEP ADJUSTMENTS. Delayed trigger and sweep adjustments are shown in figures 6-21, 6-22, and 5-24.

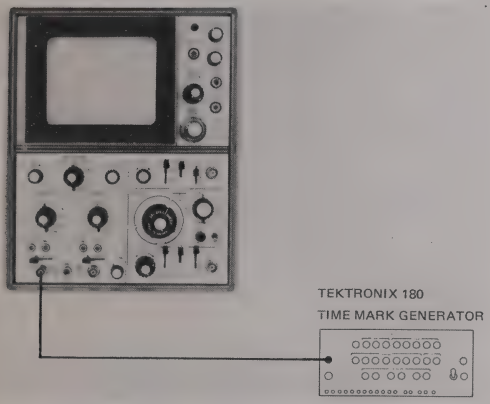

Figure 6-21. Delayed Trigger and Sweep Adjustments, Test Setup

6-47. TEST EQUIPMENT. These adjustment procedures require Time Mark Generator, Tektronix type 180A.

6-48. PROCEDURE.

a. Remove oscilloscope cover as described in paragraph 6-5.

b. Turn PWR switch ON. Allow 15 minute warmup period before proceeding.

c. Set front panel controls as follows:
HORIZ POSITION - X10 GAIN push in
TIME/DIV to 1 mSEC
DELAY VERNIER to 0.5
HORIZ MODE to INTEN
HORIZ POSITION sweep starts at first vertical graticule line.

d. Set time mark generator to 1 mSEC. Connect to channel 1 INPUT.

e. Adjust MIN DELAY CAL A3A5R24 so that intensified portion of trace starts 0.5 centimeter from the start of main sweep.

NOTE

Should there be no intensified portion, adjust MIN DELAY CAL A3A5R24. INTEN RATIO ADJUST A3A5R85 may also be adjusted to desired intensified brightness ratio.

f. Set DELAY VERNIER to 9.00.

g. Adjust MAX DELAY CAL A3A5R25 until trace starts 9 centimeters from the start of main sweep.

h. Set front panel controls as follows:
TIME/DIV to 2 mSEC
DELAYED SWEEP portion of TIME/DIV to 1 mSEC
Vernier portion of TIME/DIV to CAL
HORIZ MODE SWITCH to DLYD

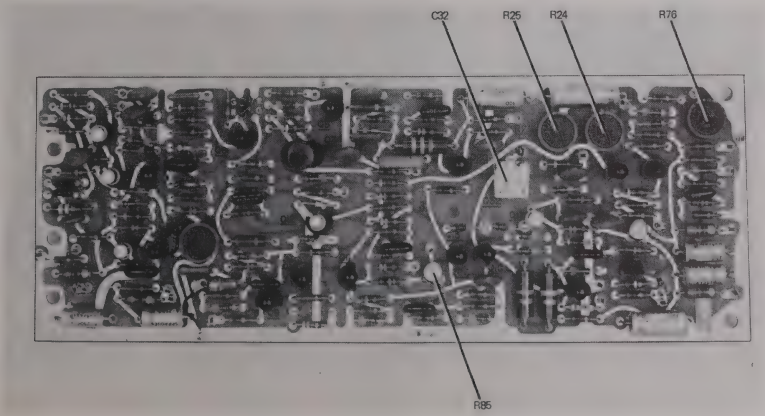

Figure 6-22. Delayed Trigger and Sweep Adjustments

i. Set time mark generator to 1 mSEC.

j. Adjust DELAY TIME BASE CAL A3A5R76 to give a time mark on each major vertical graticule line.

k. Set TIME/DIV to 2 uSEC and DELAYED SWEEP portion of TIME/DIV to 1 uSEC.

l. Set time mark generator to 1 uSEC.

m. Adjust HF CAL A3A5 C32 to give a time mark on each major vertical graticule line.

n. Disconnect test equipment and replace oscilloscope cover.

6-49. UNBLANKING AMPLIFIER ADJUSTMENT. Unblanking amplifier adjustments are shown in figures 6-23, 6-24, and 5-25.

6-50. TEST EQUIPMENT. This adjustment procedure requires an AN/USM-281 Oscilloscope and a 10:1 Divider which is part of the AN/USM-281 equipment.

6-51. PROCEDURE.

a. Remove oscilloscope cover as described in paragraph 6-5.

b. Turn PWR switch ON. Allow 15 minute warmup before proceeding.

c. Connect channel 1 INPUT through 10 to 1 divider to the collector of A1A1A2Q16. See figures 6-23 and 6-24.

d. Adjust INTENSITY to give 5 centimeters of deflection.

e. Adjust HF ADJUST A1A1A2C22 and A1A1A2C23 for the fastest rise time consistent with a flat top and less than 2% overshoot. Rise time should be approximately 70 μSEC.

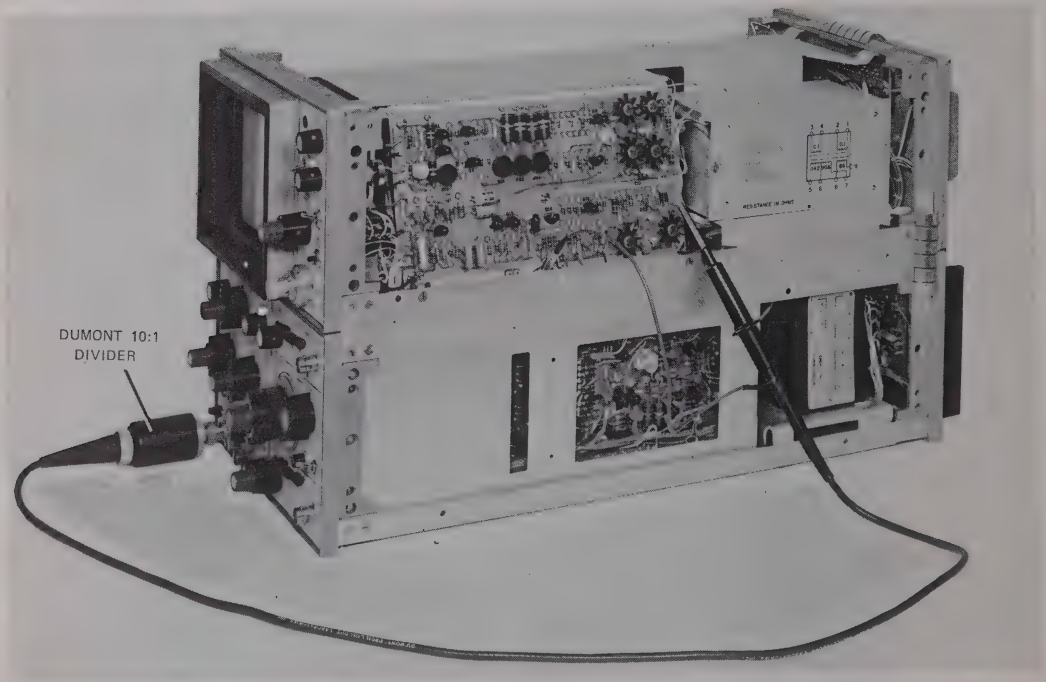

Figure 6-23. Unblanking Amplifier Adjustments, Test Setup

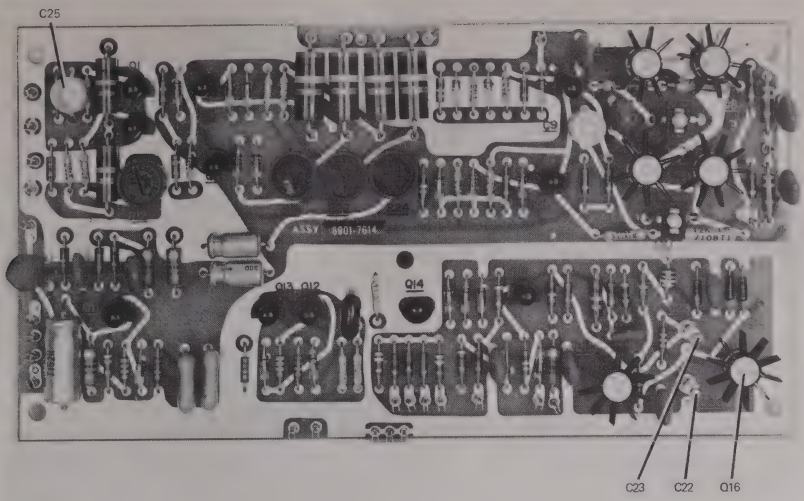

Figure 6-24. Unblanking Amplifier Adjustments

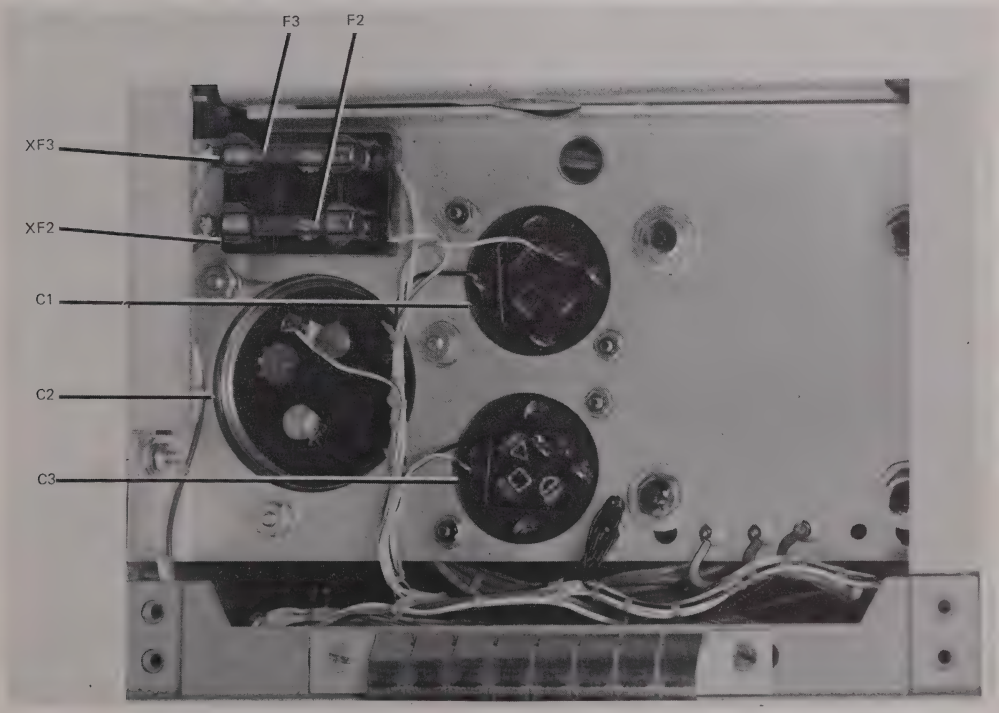

Figure 6-25. Fuse Location Diagram

Note

Complete sweep and horizontal adjustments should be made in accordance with paragraphs 4-41 through 4-71.

Table 6-1. Attenuator Assembly Capacitors

CAPACITOR NUMBER		INDENT C
CH1	CH2	
A2A7A2C11	A2A8A2C11	1
A2A7A2C3	A2A8A2C3	3
A2A7A2C5	A2A8A2C5	5
A2A7A1C7	A2A8A1C7	7
A2A7A2C2	A2A8A2C2	2
A2A7A2C4	A2A8A2C4	4
A2A7A1C6	A2A8A1C6	6
A2A7A1C9	A2A8A1C9	9
A2A7A1C11	A2A8A1C11	11
A2A7A2C8	A2A8A2C8	8
A2A7A2C10	A2A8A2C10	10

SECTION II

REPAIR

6-52. Repair and replacement procedures for the AN/USM-281D Oscilloscope are contained in the following paragraphs.

6-53. ETCHED CIRCUIT BOARD COMPONENT REPLACEMENT. Most of the electrical components in the AN/USM-281D Oscilloscope are mounted on etched circuit boards and are accessible by removing the plug-in units and/or the oscilloscope cover. All of the etched circuit boards in the oscilloscope are factory coated with a moistureproof sealant to allow the instrument to function in a high humidity environment. After completing a repair on a circuit board, the affected area must be recoated with a moisture proofing compound such as General Electric Dri-Film 88 (DF-88) to preserve the integrity of the instrument. To replace a component on an etched circuit board proceed in accordance with the following general instructions:

a. Set oscilloscope POWER switch off and disconnect power cord.

b. Use parts location diagrams, figures 7-1 through 7-19, to locate defective component.

c. Remove plug-in units and/or oscilloscope cover as required.

d. If a component is known to be faulty, cut the leads close to the component.

CAUTION

When soldering (or unsoldering) circuit board components, use a low heat (37 to 47.5 watts, less than 800°F idling temperature) slightly bent chisel type (1/16 to 1/8 inch diameter) soldering iron. Apply heat sparingly to prevent damage to the board or component. When soldering a semiconductor or other heat-sensitive component, grip the component lead between the component and the circuit board with a pair of long-nose pliers or other suitable heat sink.

e. Place the soldering iron on the component lead and pull the lead from the board.

NOTE

Large components such as potentiometers may be removed by rotating the soldering iron from lead to lead and applying steady pressure to lift the part free.

f. Clean solder from the lead holes with a toothpick and soldering iron.

g. Shape the leads of the replacement part and insert the leads into the circuit board holes.

NOTE

If space is limited, cut component leads to size (leads should extend approximately 1/16 of an inch beyond the board) before inserting component in board and disregard steps h and i.

h. Press the component against the circuit board and bend the leads (on the back side of the board) outward (approximately 45°) to hold the component in place.

i. Attach heat sink (if required) to component lead and place soldering iron on the junction of the component lead and circuit board foil (preferably on the back side of the board) and apply solder. Use a rosin-core solder type 63-37 (preferred) or 60-40 with a maximum diameter of 1/16 inch to Specification QQ-S-571 with flux to MIL-F-14526.

j. If leads were not previously cut to length, cut component leads as close to the circuit board as posible.

k. Clean rosin from circuit board with isopropyl alcohol to Specification TT-I-735.

l. Recoat serviced area with moisture proofing compound such as General Electric DF-88 (or equivalent).

6-54. ETCHED CIRCUIT BOARD REPAIR. The conductor portion of the etched circuit boards is a metal plated surface covered with solder. If a circuit board is overheated while replacing a component, the conductor may lift away from the board. A lifted conductor can be repaired by applying (use sparingly) a quick-drying acetate base cement having good insulating properties to the conductor, and reattaching the conductor to the board. If cement is not available or if a conductor is damaged, repair the circuit board by soldering a section of copper wire along the damaged conductor to complete the circuit.

6-55. MISCELLANEOUS COMPONENT REPLACEMENT. To replace components not covered by the previous replacement procedures, observe the following general rules and precautions.

a. Always set oscilloscope POWER switch off and disconnect power cord.

b. Locate component to be replaced on location diagrams.

c. Remove oscilloscope cover and/or plug-in units as required to gain access to component.

d. Unsolder leads.

e. Use location diagrams (figures 7-1 through 7-19) to determine how component is attached and remove component.

f. Install new component, reconnect and solder leads.

g. Clean rosin from solder joints with isopropyl alcohol to Specification TT-I-735.

h. Replace oscilloscope cover and/or plug-in units.

6-56. CRT REMOVAL. (See figure 4-2)

a. Turn POWER off, disconnect power cord and remove oscilloscope cover in accordance with paragraph 6-5.

b. Remove plastic insert in bezel by applying a force from the top and bottom.

c. Remove the four screws holding the bezel casting.

d. Pull bezel casting forward.

e. Lower the upper rear panel by removing the four phillips-head screws located in corners of the rear panel.

f. Carefully pull connector from the rear of the CRT.

WARNING

The CRT is a high vacuum tube and any severe shock or stress could cause the tube to implode. To prevent personal injury wear a face mask or goggles and gloves. Exercise extreme care when handling the CRT.

g. Disconnect the two wires plugged onto the upper left corner of the Vertical Output Amplifier Assembly A1A1A5. These wires are the trace rotation coil wires and must feed through the hole located in the bottom of the mu-metal CRT shield in the deflection plate area.

h. Disconnect five leads connected to the side of the CRT.

WARNING

The post accelerator lead may hold a high voltage charge. To remove this lead use a screwdriver with an insulated handle. Ground the screwdriver with a test lead and

i. Disconnect post accelerator lead.

insert the tip of the screwdriver under the insulator cap to discharge the high voltage lead.

j. Loosen screw in clamp holding the CRT. This screw can be reached from just above the Vertical Output Amplifier A1A1A5.

k. The CRT is now disconnected. Apply a steady push to the rear of the CRT and at the same time, guide the trace rotate wires. When the CRT is approximately 2 inches out, pull it the rest of the way out from the front. Be careful of the neck pins when extracting the CRT.

6-57. ATTENUATOR REMOVAL. (See figure 4-5) The vertical attenuators A2A7 and A2A8 can be removed as follows:

a. Disconnect all wires plugged onto the attenuator.

b. Unsolder resistor from the AC GND DC (28)(32) control.

c. Remove the knobs on the VERNIER and VOLTS/DIV (26)(35) controls. Loosen set screws.

d. Remove the hex nut connected to the shaft of the VOLTS/DIV (26)(35) controls.

e. Remove plastic insert located between CH 1 and CH 2 attenuators by pulling back on it.

f. Pull back and up slightly on the rear of the attenuator.

CAUTION

The grounding spring fingers on the attenuator switch are very fragile. Handle with care.

To replace the attenuator, reverse the order of the above steps.

6-58. TIMING SWITCH. (A3A6A1) (See figure 7-17).

6-59. The timing switch is accessible by removing the screws which fasten the Delay Sweep Assembly A3A6A5 and swinging it away.

6-60. FUSE REPLACEMENT.

6-61. To gain access to internal fuses, after cover removal as described in paragraph 6-5, turn oscilloscope on its side; fuses are located on the bottom of the low voltage power supply chassis, see figure 6-25.

CHAPTER 7

PARTS LIST

7-1. INTRODUCTION.

This chapter provides a complete maintenance parts list for Oscilloscope AN/USM-281D, serial numbers A1 through A676. Maintenance parts for each unit are listed alphabetically-numerically by class of part following the assembly designation. Thus the parts for each unit are grouped together. Table 7-2 provides the following information: (1) the complete reference designation of each unit assembly, or part, (2) reference to explanatory notes in paragraph 7-2, (3) noun name and brief description, and (4) identification of the illustration which pictorially locates the part.

When there is a redundancy of electronic assemblies in subsequent units, reference is made to the parts breakdown previously listed.

A brief description is given for all key parts (parts differing from any parts previously listed in this table) and sub-key parts (parts identical to a key part but appearing for the first time for a unit). The names and descriptions are omitted for other parts, but reference is made to the key or sub-key part for the data.

7-2. NOTES.

Parts list difference data illustrating the differences between the AN/USM-281D and the AN/USM-281E will be found in Appendix A.

7-3. LIST OF MAJOR COMPONENTS

Table 7-1 is a listing of all major Assemblies comprising the oscilloscope. The assemblies are listed in alpha-numerical order. When the complete reference designation of a part is known, this table will furnish the identification of the assembly in which the part is located. The assembly numbering method of assigning reference designations has been used to identify assemblies, subassemblies, and parts. This method has been expanded, as necessary, to adequately cover the various degrees of subdivision within the Oscilloscope. Example of the assembly numbering method and typical expansion of the same are illustrated by the following:

Table 7-1. List of Major Components

ASSY. NO.	QTY.	NAME
A1	1	Oscilloscope OS-246(P)/U
A2	1	Dual Trace Oscilloscope, Plug-in Unit AM-6566/U
A3	1	Time Base-Delay Oscilloscope Plug-in Unit TD-1086/U
A4	1	Front Cover Assembly Part of OS-246(P)/U

Example:

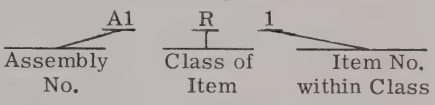

Read as: Assembly A1, resistor (R) of first(1) unit.

Partial reference designations are utilized on the equipment and illustrations and consists of the class letter(s) and the identifying item number. The complete reference designations are obtained by placing the proper prefix before the partial reference designations.

7-4. LIST OF COMMON ITEM DESCRIPTIONS.

A list of common item descriptions for the AN/USM-281D configuration is given in Table 7-3 and contains the description of all multiple use parts (over five applications) grouped and arranged in alphabetical order. Reference to these common items is made by item number in the parts list. Common item descriptions for the AN/USM-281E will be found in Appendix A.

7-5. LIST OF ATTACHING HARDWARE.

A list of standard attaching hardware used more than five times for the AN/USM-281D configuration is given in Table 7-4. This hardware is identified by an assigned letter code in the parts list, e.g. C(4) third item in table in which 4 pieces are used. Attaching hardware for the AN/USM-281E configuration will be found in Appendix A.

7-6. LIST OF MANUFACTURERS.

Table 7-5 lists the manufacturers of parts used in the AN/USM-281D configuration by H4-1 codes. The list of manufacturers for the AN/USM-281E configuration will be found in Appendix A.

TABLE 7-2. OSCILLOSCOPE AN/USM-281D, PARTS LIST

Oscilloscope OS-246(P)/U (A1)

Reference Designation		Name and Description	
		OSCILLOSCOPE: MIL type AN/USM-281D	7 - 1
MP1		COVER ASSEMBLY: 30669 part no. 8700-2551	7 - 1
MP2		COVER, MAIN FRAME: 30669 part no. 8901-7905	7 - 1
MP3		PLATE, IDENTIFICATION: 30669 part no. 3901 1131	7 - 1
MP4		BEZEL, INSERT: 30669 part no. 4501-3171	7 - 1
MP5		SHIELDED WINDOW: 30669 part no. 4202-6541	7 - 1
MP6		STRIP, DIE CUT: 30669 part no. 7403-5771	7 - 1
MP7 to MP9		Same as MP6	7 - 1
MP10		PLATE, IDENTIFICATION: OSCILLOSCOPE, 30669 part no. 3901-3221 (Attaching Parts): SCREW, MACHINE: Pan head, self tapping, Phillips, no. 4-40 x 3/16 in. lg. 30669 part no. 6043-0560	7 - 1
MP11		PLATE: IDENTIFICATION: Front Cover; 30669 part no. 3901-3181 (Attaching Parts): RIVET, OPEN END: 30669 part no. 6303-1050 (2)	7 - 1
MP12		PLATE, IDENTIFICATION: Vertical, Dual trace Plug-in; 30669 part no. 3901-3211 (Attaching Parts): RIVET, OPEN END: 30669 part no. 6303-1050 (2)	7 - 1
MP13		PLATE, IDENTIFICATION: OSCILLOSCOPE MAIN FRAME, 30669 part no. 3901-3191 (Attaching Parts): RIVET, OPEN END: 30669 part no. 6303-1050 (2)	7 - 1
MP14		PLATE, IDENTIFICATION: Time base and delay plug-in; 30669 part no. 3901-3201 (Attaching Parts): RIVET, OPEN END: 30669 part no. 6303-1050 (2)	7 - 1
MP15		DECAL, H. V. TRANSFORMER: 30669 part no. 3901-1116	7 - 1
MP16		DECAL, POWER TRANSFORMER: 30669 part no. 3901-1117	7 - 1
A1		OSCILLOSCOPE: MIL type OS-246 (P)/U	7 - 2
A1MP1		KNOB: Round, black; 32767 part no. 1-525; 30669 part no. 4501-0930	7 - 2
A1MP2		KNOB: Round, black; 32767 part no. C105; 30669 part no. 4501-0970	7 - 2
A1MP3		KNOB: Round, red; 32767 part no. 2-503; 30669 part no. 4501-0990	7 - 2
A1MP4		Same as A1MP1	7 - 2
A1MP5		BRACKET, WIPER, MOUNTING: Side; 30669 part no. 3507-7757 (Attaching Parts): SCREW, MACHINE: Flat head, no. 6-32 x 3/8 in. lg. 30669 part no. 6009-6680 (2); N (2); I (2)	7 - 2
A1MP6		Same as A1MP5	
A1MP7		RFI FINGERS: 30669 part no. 3505-0800	
A1MP8		Same as A1MP7	
A1MP9		BRACKET, WIPER MOUNTING: 30669 part no. 3507-7758 (Attaching Parts): SCREW, MACHINE: Flat head no. 6-32 x 3/8 in. lg; 30669 part no. 6009-6680 (2) N (2); I (2)	
A1MP10		Same as A1MP9	
A1MP11		RFI FINGERS: 30669 part no. 3505-0790	

TABLE 7-2. OSCILLOSCOPE AN/USM-281D, PARTS LIST(CONT)

Oscilloscope OS-246(P)/U (A1)

Reference Designation	Notes	Name and Description	Figure Number
A1MP12		Same as A1MP11	7 - 2
A1MP13		STRIP, RFI: 30669 part no. 3507-7766 (Attaching Parts): B (2); SCREW, MACHINE: Flat head, no. 6-32 x 1/4 in. lg; 30669 part no. 6009-6660 (2)	7 - 2
A1MP14		Same as A1MP13	7 - 2
A1MP15		STRAP, RETAINING: 30669 part no. 3700–1700 (Attaching Parts): E (1); L (1)	
A1MP16		TERMINAL, LUG: Grounding; No. 6; 30669 part no. 5100-1110 (Attaching Parts): E (1); L (1)	7 - 2
A1MP17		CLAMP, CABLE: 30669 part no. 3701-1250	7 - 2
A1MP18		CLAMP, CABLE: 30669 part no. 3700-9430 (Attaching Parts): E (1); N (1): WASHER, FLAT: 30669 part no. 6201-0360 (1)	7 - 2
A1V1		ELECTRON TUBE: CRT: 30669 part no. 2501-1066	
A1A1	1	DISPLAY SECTION ASSEMBLY: 30669 part no. 8901-7903	7 - 3
A1A1MP1	1	SHIELD, LIGHT: 30669 part no. 3801-8811 (Attaching Parts): EYELET: 30669 part no. 6300–8110 (2)	7 - 3
A1A1MP2	1	COVER, H.V. SHIELD: 30669 part no. 3103-5501 (Attaching Parts):SCREW, MACHINE: Sheet metal, hexagon head, no. 6 x 1/2 in. lg; 30669 part no. 6040-9010 (2)	7 - 3
A1A1MP3	1	BRACKET, H.V. SHIELD: 30669 part no. 3507-7511 (Attaching Parts): SCREW, MACHINE: Binding hd, no. 6-32 x 5/8 in. lg; 30669 part no. 6009-8590 (2); WASHER, FLAT: 30669 part no. 6201-0360 (2); N (2); I (2)	7 - 3
A1A1MP4	1	CLAMP, CABLE: 30669 part no. 3700-9420	
A1A1MP5	1	Same as A1A1MP4	
A1A1MP6	1	SUPPORT: 30669 part no. 3103-5665 (Attaching Parts): B (4); NUT, SELF-RETAINING: No. 6-32; 30669 part no. 6103-9060 (4): SCREW, MACHINE: Flat head, no. 6-32 x 3/8 in. lg; 30669 part no. 6009-6800 (4)	7 - 3
A1A1MP7	1	SHIELD, VERTICAL AMPLIFIER: 30669 part no. 3103-5452 (Attaching Parts): E (2); NUT, SELF-RETAINING: No. 6-32; 30669 part no. 6103-9060 (2)	7 - 3
A1A1MP8	1	BRACKET, TUBE SHIELD: 30669 part no. 3507–7531 (Attaching Parts): SCREW, MACHINE: Flat head no. 6-32 x 3/8 in. lg; 30669 part no. 6009-6680 (2); N (2)	7 - 3
A1A1MP9	1	SHIELD, CATHODE RAY TUBE: 30669 part no. 4202-5541	7 - 3
A1A1MP10	1	CUSHION, CATHODE RAY TUBE: 30669 part no. 7403-5811	7 - 3
A1A1MP11	1	CUSHION, CATHODE RAY TUBE: 30669 part no.7403-5831	7 - 3
A1A1MP12	1	SHIELD, HORIZONTAL AMPLIFIER: 30669 part no. 3103–5492 (Attaching Parts): E(2); NUT, SELF- RETAINING: No. 6-32; 30669 part no. 6103–9060 (2)	7 - 3
A1A1MP13	1	CLAMP, CABLE: 30669 part no. 3702-1240	7 - 3
A1A1MP14	1	CASTING, FINISHED: 30669 part no. 3507-7673	7 - 3
A1A1R1	1	Not Used	7 - 3
A1A1R2	1	Not Used	7 - 3
A1A1R3	1	RESISTOR, FIXED, COMPOSITION: 1 Megohm, 1/4 W; 01121 part no. CB1055; 30669 part no. 0235-5330	7 - 3
A1A1XV1	1	SOCKET, ELECTRON TUBE: 73445 part no. TYPE 55566; 30669 part no. 3401-0980	7 - 3

Note 1. See Appendix A for AN/USM-281E configuration of A1A1.

TABLE 7-2. OSCILLOSCOPE AN/USM-281D, PARTS LIST(CONT)

Oscilloscope OS-246(P)/U(A1)

Reference Designation	Notes	Name and Description	Figure Number
A1A1A1		DISPLAY PANEL ASSEMBLY, REAR: 30669 part no. 8901-7786	7-4
A1A1A1FL1		FILTER, RADIO FREQUENCY INTERFERENCE: Line; 30669 part no. 2102-1521	7-4
A1A1A1F1		FUSE, CARTRIDGE: 2 amp, slow-blow; 75915 part no. 313002; 30669 part no. 1100-5280	7-4
A1A1A1J1		Table 7-3; Item No. 12 (Attaching Parts) H(5), O(5)	7-4
A1A1A1J2 to A1A1A1J5		Same as A1A1A1J1	7-4
A1A1A1MP1		BUSHING, STRAIN RELIEF: 30669 part no. 3800-0930	7-4
A1A1A1MP2		CLAMP, CABLE: 30669 part no. 3700-9430 (Attaching Parts) WASHER: 30669 part no. 6201-0360	7-4
A1A1A1MP3		POST, THREADED: 30669 part no. 6091-1691	7-4
A1A1A1MP4		NUT, KNURLED: 30669 part no. 4501-2191	7-4
A1A1A1MP5		TERMINAL, LUG: 30669 part no. 5100-5240 (Attaching Parts) NUT, HEX: 1/4-32 x 3/32 thk, 3/8 A.F.; 30669 part no. 6103-1050	7-4
A1A1A1MP6		TERMINAL, LUG: GROUNDING; 30669 part no. 5100-1200	7-4
A1A1A1MP7		GROMMET: 30669 part no. 3800-3650	7-4
A1A1A1MP8		PANEL, REAR: 30669 part no. 3201-7701	7-4
A1A1A1R1		RESISTOR, VARIABLE: 50,000 ohms; 30669 part no. 0107-3910 (Attaching Parts) O(2)	7-4
A1A1A1R2		Same as A1A1A1R1	7-4
A1A1A1R3		RESISTOR, VARIABLE: 50,000 ohms; 30669 part no. 0109-4550 (Attaching Parts) O(1)	7-4
A1A1A1R4		RESISTOR, VARIABLE: 4,000 ohms, 30669 part no. 0109-1770 (Attaching Parts) O(1)	7-4
A1A1A1S1		SWITCH SLIDE: 115-230V; 82389 part no. 11A1303; 30669 part no. 0503-2480 (Attaching Parts) D(2)	7-4 7-4 7-4
A1A1A1W1		CORD ASSEMBLY, POWER: 30669 part no. 5028-9701	7-4
A1A1A1XF1		FUSEHOLDER: 75915 part no. 342-004; 30669 part no. 1100-1890	
A1A1A1A1	2	AUXILIARY OUTPUT ASSEMBLY: 30669 part no. 8901-7859 (Attaching Parts) B(2),N(2)	7-5
A1A1A1A1CR1	2	Table 7-3; Item No. 43	7-5
A1A1A1A1CR2	2	Same as A1A1A1A1CR1	7-5
A1A1A1A1MP1	2	TERMINAL: 82893 part no. PINT-28; 30669 part no. 5120-2800	7-5
A1A1A1A1MP2	2	PRINTED CIRCUIT BOARD: 30669 part no. 4003-1502	7-5
A1A1A1A1Q1	2	Table 7-3, Item No. 53	7-5
A1A1A1A1Q2 to A1A1A1A1Q4	2	Same as A1A1A1A1Q1	7-5
A1A1A1A1Q5	2	Table 7-3; Item No. 52	7-5
A1A1A1A1Q6	2	Same as A1A1A1A1Q5	7-5
A1A1A1A1R1	2	Table 7-3; Item No. 32	7-5
A1A1A1A1R2 to A1A1A1A1R8		Same as A1A1A1A1R1	7-5
A1A1A1A1R9	2	Table 7-3; Item No. 33	7-5
A1A1A1A1R10	2	Same as A1A1A1A1R9	7-5

Note 2. See Appendix A for AN/USM-281E configuration of A1A1A1A1.

TABLE 7-2. OSCILLOSCOPE AN/USM-281D, PARTS LIST(CONT)

Oscilloscope OS-246(P)/U (A1)

Reference Designation	Notes	Name and Description	Figure Number
A1A1A1A1R11	2	Not Used	7 - 5
A1A1A1A1R12	2	Table 7-3; Item No. 21	7 - 5
A1A1A1A1R13	2	Not Used	7 - 5
A1A1A1A1R14	2		
to		Same as A1A1A1A1R12	7 - 5
A1A1A1A1R16	2		
A1A1A1A1R17	2	Table 7-3; Item No. 26	7 - 5
A1A1A1A1R18	2	Same as A1A1A1A1R17	7 - 5
A1A1A1A1R19	2	Table 7-3; Item No. 31	7 - 5
A1A1A1A1R20	2	Same as A1A1A1A1R19	7 - 5
A1A1A1A1R21	2	Table 7-3; Item No. 35	7 - 5
A1A1A1A1R22	2	Same as A1A1A1A1R21	7 - 5
A1A1A1A1R23	2	Table 7-3; Item No. 19	7 - 5
A1A1A1A1R24	2	Table 7-3; Item No. 37	7 - 5
A1A1A1A1R25	2	Table 7-3; Item No. 28	7 - 5
A1A1A1A1R26	2	Same as A1A1A1A1R25	7 - 5
A1A1A1A1XQ1	2	Table 7-3; Item No. 47	7 - 5
A1A1A1A1XQ2	2		
to		Same as A1A1A1A1XQ1	7 - 5
A1A1A1A1XQ6			
A1A1A2		HORIZONTAL OUTPUT ASSEMBLY: 30669 part no. 8901-7614	7 - 6
A1A1A2CR1			
to		Same as A1A1A1A1CR1	7 - 6
A1A1A2CR20			
A1A1A2CR21		Table 7-3; Item No. 42	7 - 6
A1A1A2CR22		Same as A1A1A2CR21	7 - 6
A1A1A2C1		Table 7-3; Item No. 2	7 - 6
A1A1A2C2		Same as A1A1A2C1	7 - 6
A1A1A2C3		Table 7-3; Item No. 5	7 - 6
A1A1A2C4		Same as A1A1A2C3	7 - 6
A1A1A2C5			
to		Same as A1A1A2C1	7 - 6
A1A1A2C7			
A1A1A2C8		CAPACITOR, VARIABLE: 0.65-3.2 pf; 30669 part no. 0319-1262	7 - 6
A1A1A2C9		CAPACITOR, VARIABLE, CERAMIC DIELECTRIC: 2-8pf; 18796 part no. 538-011A2-8 PF; 30669 part no. 0327-3600	7 - 6
A1A1A2C10		Same as A1A1A2C8	7 - 6
A1A1A2C11		Same as A1A1A2C1	7 - 6
A1A1A2C12		Same as A1A1A2C1	7 - 6
A1A1A2C13		CAPACITOR, FIXED, FILM DIELECTRIC: 10,000 pf, 100 vdc; 56289 part no. 255P10391W; 30669 part no. 0328-1330	7 - 6
A1A1A2C14		Same as A1A1C13	7 - 6
A1A1A2C15		CAPACITOR, FIXED, MICA DIELECTRIC: 1,000 pf, ±5%, 500 vdc; 72136 part no. DM15-102J; 30669 part no. 0317-5750	7 - 6
A1A1A2C16		CAPACITOR, FIXED, ELECTROLYTIC: 75 uf, 25 vdc; 56289 part no. 30D75G025DC2; 30669 part no. 0328-0710	7 - 6
A1A1A2C17			
to		Same as A1A1A2C1	7 - 6
A1A1A2C21			
A1A1A2C22		Table 7-3; Item No. 7	7 - 6
A1A1A2C23		Same as A1A1A2C22	7 - 6

Note 2. See Appendix A for AN/USM-281E configuration of A1A1A1A1.

TABLE 7-2. OSCILLOSCOPE AN/USM-281D, PARTS LIST(CONT)

Oscilloscope OS-246(P)/U (A1)

Reference Designation	Notes	Name and Description	Figure Number
A1A1A2C24		CAPACITOR, FIXED, COMPOSITION: 3.3 pf, ±10%, 29604, GA3-3P FPORM10PCT; 30669 part no. 0313-3900	7-6
A1A1A2C25		CAPACITOR, VARIABLE, CERAMIC DIELECTRIC: 9-35 pf; 18796 part no. 538-011D9-35PF; 30669 part no. 0327-3670	7-6
A1A1A2L1		Table 7-3; Item No. 9	7-6
A1A1A2L2 to A1A1A2L4		Same as A1A1A2L1	7-6
A1A1A2L5		Table 7-3; Item No. 1	7-6
A1A1A2MP1		PRINTED CIRCUIT BOARD: 30669 part no. 4003-1424	7-6
A1A1A2MP2		PIN, FORMED, PRINTED CIRCUIT: 30669 part no. 5102-2760	7-6
A1A1A2MP3		Same as A1A1A2MP2	7-6
A1A1A2MP4		Same as A1A1A2MP2	7-6
A1A1A2MP5		TERMINAL, FORMED: 30669 part no. 5102-2800	7-6
A1A1A2MP6 to A1A1A2MP32		Same as A1A1A2MP5	7-6
A1A1A2MP33		HEATSINK: 05820 part no. 205CB; 30669 part no. 8100-5890	7-6
A1A1A2MP34 to A1A1A2MP38		Same as A1A1A2MP33	7-6
A1A1A2MP39		BEAD, INSULATING: 30669 part no. 7404-1020	7-6
A1A1A2MP40		Same as A1A1A2MP39	7-6
A1A1A2Q1		Same as A1A1A1A1Q5	7-6
A1A1A2Q2		Same as A1A1A1A1Q5	7-6
A1A1A2Q3 to A1A1A2Q6		Same as A1A1A1A1Q1	7-6
A1A1A2Q7		TRANSISTOR: NPN; 04713 part no. MM3001; 30669 part no. 2601-0400	7-6
A1A1A2Q8		TRANSISTOR: PNP; 04713 part no. 2N4929; 30669 part no. 2601-0470	7-6
A1A1A2Q9		Same as A1A1A2Q8	7-6
A1A1A2Q10		Same as A1A1A2Q7	7-6
A1A1A2Q11 to A1A1A2Q13		Same as A1A1A1A1Q1	7-6
A1A1A2Q14		Table 7-3; Item No. 48	7-6
A1A1A2Q15		Same as A1A1A2Q14	7-6
A1A1A2Q16		Same as A1A1A2Q7	7-6
A1A1A2Q17		Same as A1A1A2Q8	7-6
A1A1A2R1		Table 7-3; Item No. 34	7-6
A1A1A2R2		RESISTOR, FIXED, COMPOSITION: 51,000 ohms; 1/4 w; 01121 part no. CB5135; 30669 part no. 0235-5020	7-6
A1A1A2R3		RESISTOR, FIXED, COMPOSITION: 5,100 ohms, 1/4 w; 01121 part no. CB5125; 30669 part no. 0235-4780	7-6
A1A1A2R4		Same as A1A1A2R1	7-6
A1A1A2R5		Table 7-3; Item No. 14	7-6
A1A1A2R6		RESISTOR, FIXED, COMPOSITION: 10,000 ohms, 1 w; 01121 part no. GB1035; 30669 part no. 0203-3720	7-6

TABLE 7-2. OSCILLOSCOPE AN/USM-281D, PARTS LIST(CONT)

Oscilloscope OS-246(P)/U (A1)

Reference Designation	Notes	Name and Description	Figure Number
A1A1A2R7		RESISTOR, FIXED, FILM: 2,550 ohms, ±1%, 1/8w; 91637 part no. MFF1-8-2551T1; 30669 part no. 0238-8870	7-6
A1A1A2R8		RESISTOR, FIXED, FILM: 3,830 ohms, ±1%, 1/8 w; 91637 part no. MFF1-8-3831T1; 30669 part no. 0238-8900	7-6
A1A1A2R9		Same as A1A1A2R8	7-6
A1A1A2R10		Same as A1A1A2R7	7-6
A1A1A2R11		Same as A1A1A2R6	7-6
A1A1A2R12		RESISTOR, VARIABLE: 100 ohms, ±30%, 84048 part no. 179-100PORM30; 30669 part no. 0109-6310	7-6
A1A1A2R13		RESISTOR, FIXED, FILM: 1,240 ohms, ±1%, 1/8w; 91637 part no. MFF1/8-1241T1; 30669 part no. 0238-9960	7-6
A1A1A2R14		Table 7-3; Item No. 38	7-6
A1A1A2R15		RESISTOR, FIXED: FILM: 10,000 ohms, ±2%, 2w; 24546 part no. FP-42;30669 part no. 0236-9820	7-6
A1A1A2R16		Same as A1A1A2R12	7-6
A1A1A2R17		Same as A1A1A2R15	7-6
A1A1A2R18		Same as A1A1A2R13	7-6
A1A1A2R19		Same as A1A1A2R15	7-6
A1A1A2R20		RESISTOR, FIXED, FILM: 1,470 ohms, ±1%, 1/8 w; 91637 part no. MFF1/8-2551T1; 30669 part no. 0238-9180	7-6
A1A1A2R21		Same as A1A1A2R15	7-6
A1A1A2R22		RESISTOR, VARIABLE; 500 ohms, ±30%; 84048 part no. 179-000 500 PORM30; 30669 part no. 0109-6370	7-6
A1A1A2R23		Table 7-3; Item No. 17	7-6
A1A1A2R24		RESISTOR, VARIABLE: 50,000 ohms, ±30%, 84048 part no. 179-000-50K; 30669 part no.0109-6400	7-6
A1A1A2R25		Same as A1A1A2R23	7-6
A1A1A2R26		Same as A1A1A2R7	7-6
A1A1A2R27		Table 7-3; Item No. 36	7-6
A1A1A2R28		Same as A1A1A2R27	7-6
A1A1A2R29		Same as A1A1A2R7	7-6
A1A1A2R30		RESISTOR, FIXED, FILM: 2,730 ohms, ±1%, 1/8 w; 91637 part no. MFF1-8-2731T1; 30669 part no. 0238-8860	7-6
A1A1A2R31		Same as A1A1A2R30	7-6
A1A1A3R32		Table 7-3; Item No. 23	7-6
A1A1A2R33		Same as A1A1A2R32	7-6
A1A1A2R34		RESISTOR, FIXED, FILM:3,010 ohms, ±1%, 1/4w; 91637 part no. MFF1-4-3011T1; 30669 part no. 0238-9290	7-6
A1A1A2R35		Table 7-3; Item No. 16	7-6
A1A1A2R36		Same as A1A1A2R35	7-6
A1A1A2R37		Same as A1A1A2R34	7-6
A1A1A2R38		RESISTOR, FIXED, COMPOSITION: 3300 ohms, 1/2 w; 01121 part no. EB3325; 30669 part no. 0203-0600	7-6
A1A1A2R39		Same as A1A1A2R38	7-6
A1A1A2R40		RESISTOR, FIXED, FILM: 12,000 ohms, ±1%, 1/2 w; 91637 part no. MFF1-2-1202T1; 30669 part no. 0238-9280	7-6
A1A1A2R41		Same as A1A1A2R40	7-6
A1A1A2R42		RESISTOR, FIXED, COMPOSITION: 33,000 ohms, 1/4 w; 01121 part no. CB3335; 30669 part no. 0235-4970	7-6
A1A1A2R43		RESISTOR, FIXED, COMPOSITION: 68,000 ohms, 1/4 w; 01121 part no. CB6835;30669, part no. 0235-5050	7-6

TABLE 7-2. OSCILLOSCOPE AN/USM-281D, PARTS LIST(CONT)

Oscilloscope OS-246(P)/U (A1)

Reference Designation	Notes	Name and Description	Figure Number
A1A1A2R44		Table 7-3; Item No. 29	7-6
A1A1A2R45		Same as A1A1A2R43	7-6
A1A1A2R46		Same as A1A1A2R42	7-6
A1A1A2R47		Same as A1A1A2R43	7-6
A1A1A2R48		RESISTOR, FIXED, FILM: 4400 ohms, ±1/4%, 1/8 w; 91637 part no. MFF1-8-4401-T1; 30669 part no. 0238-9760	7-6
A1A1A2R49		RESISTOR, FIXED, FILM: 220 ohms, ±1/4%, 1/8 w;91637 part no. MFF1-8-2200T1; 30669 part no. 0238-9770	7-6
A1A1A2R50		RESISTOR, FIXED, FILM: 94.9 ohms, ±1/4%, 1/8w; 91637 part no. MFF1-8-94R4T1; 30669 part no. 0238-9780	7-6
A1A1A2R51		Same as A1A1A2R3	7-6
A1A1A2R52		Same as A1A1A2R1	7-6
A1A1A2R53		Same as A1A1A2R1	7-6
A1A1A2R54		RESISTOR, FIXED, COMPOSITION: 3,9000 ohms, 1/4 w; 01121 part no. CB3925; 30669 part no. 0235-4750	7-6
A1A1A2R55		Same as A1A1A2R54	7-6
A1A1A2R56		Same as A1A1A2R5	7-6
A1A1A2R57		Same as A1A1A1A1R25	7-6
A1A1A2R58		RESISTOR, FIXED, COMPOSITION: 200,000 ohms, 1/4 w; 01121 part no. CB2045; 30669 part no. 0235-5160	7-6
A1A1A2R59		Same as A1A1A2R23	7-6
A1A1A2R60		Same as A1A1A1A1R19	7-6
A1A1A2R61		Same as A1A1A1A1R12	7-6
A1A1A2R62		Same as A1A1A2R35	7-6
A1A1A2R63		RESISTOR, FIXED, COMPOSITION: 20,000 ohms, 1/2 w; 01121 part no. EB2035; 30669 part no. 0203-0790	7-6
A1A1A2R64		RESISTOR, FIXED, COMPOSITION: 300 ohms, 1/4 w; 01121 part no. CB3015; 30669 part no. 0235-4490	7-6
A1A1A2R65		RESISTOR, FIXED, COMPOSITION: 13,000 ohms, 1/4 w; 01121 part no. CB1335; 30669 part no. 0235-4880	7-6
A1A1A2R66		RESISTOR, FIXED, COMPOSITION: 150,000 ohms, 1/4 w; 01121 part no. CB1545; 30669 part no. 0235-5130	7-6
A1A1A2R67		Same as A1A1A2R65	7-6
A1A1A2R68		Table 7-3; Item No. 15	
A1A1A2XQ1 to A1A1A2XQ17		Same as A1A1A1A1XQ1	7-6
A1A1A3		HIGH VOLTAGE ASSEMBLY: 30669 part no. 8901-7612	7-7
A1A1A3CR1		Same as A1A1A1A1CR1	7-7
A1A1A3CR2		Same as A1A1A1A1CR1	7-7
A1A1A3CR3		SEMICONDUCTOR DEVICE, DIODE: High voltage; 18796 part no. HV80EL; 30669 part no. 2601-0540	7-7 7-7
A1A1A3CR4		Same as A1A1A3CR3	7-7
A1A1A3CR5		Table 7-3; Item No. 45	7-7
A1A1A3C1		CAPACITOR, FIXED, CERAMIC DIELECTRIC: 1uf, 100 vdc; 30669 part no. 0328-1220	7-7 7-7
A1A1A3C2		CAPACITOR, FIXED, CERAMIC DIELECTRIC: 1,000 pf, ±20%, 91418 part no. 3KV1000PFPORM 20; 30669 part no. 0316-9190	7-7 7-7
A1A1A3C3		CAPACITOR, FIXED, ELECTROLYTIC; 10 ufd cap 150 V DC; 56289 part no. 30D106F150DD2; 30669 part no. 0328-0820	7-7 7-7

TABLE 7-2. OSCILLOSCOPE AN/USM-281D, PARTS LIST(CONT)

Oscilloscope OS-246(P)/U (A1)

Reference Designation	Notes	Name and Description	Figure Number
A1A1A3C4A		CAPACITOR, FIXED, CERAMIC DIELECTRIC: 10,000 pf; 18796 part no. 3888-022X5R0103M; 30669 part no.0328-3170	7-7
A1A1A3C4B		Same as A1A1A3C4A	7-7
A1A1A3C5A		Same as A1A1A3C4	7-7
A1A1A3C5B		Same as A1A1A3C4	7-7
A1A1A3C6		Same as A1A1A3C4	7-7
A1A1A3C7		Same as A1A1A3C4	7-7
A1A1A3C8		CAPACITOR, FIXED, MICA DIELECTRIC: 510 pf, ±5%, 500 vdc; 72136 part no. DM15-511J: 30669 part no. 0317-5470	7-7
A1A1A3C9		CAPACITOR, FIXED: FILM: .022UF, ±10% 100 VDC; 56289 part no. 225P22391 WD; 30669 part no. 0328-1390	7-7
A1A1A3L1		COIL, RADIO FREQUENCY: 1 mh; 82142 part no. 1331-35J; 30669 part no. 2110-2530	7-7
A1A1A3MP1 to A1A1A3MP6		Same as A1A1A2MP39	7-7
A1A1A3MP7		PRINTED CIRCUIT BOARD; 30669 part no. 4003-1385	7-7
A1A1A3Q1		Table 7-3; Item No. 49	7-7
A1A1A3Q2		Same as A1A1A3Q1	7-7
A1A1A3Q3		Same as A1A1A3Q1	7-7
A1A1A3R1		RESISTOR, VARIABLE: 100,000 ohms, ±30%; 84048 part no. 179-000-100K; 30669 part no. 0109-6410	7-7
A1A1A3R2		RESISTOR, FIXED, FILM: 500,000 ohms, ±1%, 1/8 w; 91637 part no. MFF1-8-5003T1; 30669 part no. 0238-8940	7-7
A1A1A3R3		RESISTOR, FIXED, FILM: 1.33 megohm, ±1%, 1/2 w; 91637 part no. MFF1-2-1334T1; 30669 part no. 0238-9130	7-7
A1A1A3R4		Same as A1A1A3R3	7-7
A1A1A3R5		Same as A1A1A3R3	7-7
A1A1A3R6		RESISTOR, FIXED, FILM: 619,000 ohms, ±1%, 1/2 w; 91637 part no. MFF1-2-6193T1; 30669 part no. 0238-9580	7-7
A1A1A3R7		RESISTOR, FIXED, FILM: 2 megohm, ±1%, 1/2 w; 91637 part no. MFF1-2-2004T1; 30669 part no. 0238-9590	7-7
A1A1A3R8		Same as A1A1A2R35	7-7
A1A1A3R9		RESISTOR, FIXED, COMPOSITION: 20,000 ohms, 1/4 w; 01121 part no. CB2035; 30669 part no. 0235-4920	7-7
A1A1A3R10		Same as A1A1A3R9	7-7
A1A1A3R11		Same as A1A1A2R58	7-7
A1A1A3R12		RESISTOR, FIXED, WIREWOUND: 35 megohms, ±5%, 2 w; 84048 part no. MVX1-35PORM5-2w; 30669 part no. 0228-0050	7-7
A1A1A3R13		Same as A1A1A2R23	7-7
A1A1A3R14		Table 7-3; Item No. 22	7-7
A1A1A3R15		Table 7-3; Item No. 25	7-7
A1A1A3R16		Same as A1A1A3R15	7-7
A1A1A3R17		Same as A1A1A2R27	7-7
A1A1A3R18		Same as A1A1A2R58	7-7
A1A1A3R19		Same as A1A1A2R35	7-7
A1A1A3R20		RESISTOR, FIXED, COMPOSITION: 2200 ohms, 1/4 w; 01121 part no. CB2225; 30669 part no. 0235-4690	7-7
A1A1A3XQ1 to A1A1A3XQ3		Same as A1A1A1A1XQ1	7-7

TABLE 7-2. OSCILLOSCOPE AN/USM-281D, PARTS LIST(CONT)

Oscilloscope OS-246(P)/U (A1)

Reference Designation	Notes	Name and Description	Figure Number
A1A1A4	3	HIGH VOLTAGE CHASSIS ASSEMBLY: 30669 part no. 8901-7616	7-8
A1A1A4CR1	3	Table 7-3; Item No. 44	7-8
A1A1A4C1	3	Same as A1A1A2C16	7-8
A1A1A4L1	3	COIL, RADIO, FREQUENCY: 2.5 mh; 91934 part no. 6302; 30669 part no. 2101-9010	7-8
A1A1A4MP1	3	SHIELD, HIGH VOLTAGE: 30669 part 3103-5461	7-8
A1A1A4MP2	3	GROMMET, STRIP: 30669 part no. 3802-3310	7-8
A1A1A4MP3	3	INSULATOR, WAFER, TO-66; 30669 part no. 4101-2350	7-8
A1A1A4MP4	3	TERMINAL, STUD, INSULATED: 30669 part no. 5100-7100 (Attaching Parts) C (3), M (3)	7-8
A1A1A4MP5	3	Same as A1A1A4MP4	7-8
A1A1A4MP6	3	Same as A1A1A4MP4	7-8
A1A1A4MP7	3	TERMINAL, LUG: No. 4; 30669 part no. 5100-0390	7-8
A1A1A4M1	3	MULTIPLIER, HIGH VOLTAGE: 30669 part no. 8800-3262 (Attaching parts) I (2), N (2)	7-8
A1A1A4Q1	3	TRANSISTOR: NPN; 04713 part no. 2N3766; 30669 part no. 2601-0600 (Attaching Parts) SCREW, MACHINE, PAN HEAD: stainless steel, no. 6-32 x 3/8 in lg; 30669 part no. 6043-0530 (2)	7-8
A1A1A4R1	3	RESISTOR, FIXED, COMPOSITION: 7,500 ohms, 1/4w; 01121 part no. CB7525; 30669 part no. 0235-4820	7-8
A1A1A4T1	3	TRANSFORMER, POWER, STEP-UP: High voltage; 30669 part no. 2101-9601 (Attaching Parts)SCREW, MACHINE, ROUND HEAD; stainless steel, no. 6-32 x 1/4 in lg; 30669 part no. 6009-7620 (2), N (2)	7-8
A1A1A4XQ1	3	SOCKET, TRANSISTOR: TO-66; 22753 part no. PT55A; 30669 part no. 3401-1000	7-8
A1A1A5	4	VERTICAL OUTPUT ASSEMBLY: 30669 part no. 8901-7610	7-9
A1A1A5CR1	4	SEMICONDUCTOR DEVICE, DIODE: Zener, 3.3V; 01295 part no. 1N746A; 30669 part no. 2601-3100	7-9
A1A1A5CR2	4	Same as A1A1A1A1CR1	7-9
A1A1A5CR3	4	SEMICONDUCTOR DEVICE, DIODE: Zener; 28959 part no. IN967B; 30669 part no. 2601-3120	7-9
A1A1A5C1	4	Same as A1A1A2C3	7-9
A1A1A5C2	4	CAPACITOR, FIXED, CERAMIC DIELECTRIC: 6.8 pf, ±10%, 18796 part no. NP0331-000-6R8K; 30669 part no. 0316-7240	7-9
A1A1A5C3	4	Same as A1A1A5C2	7-9
A1A1A5C4	4	Same as A1A1A2C1	7-9
A1A1A5C5	4	Same as A1A1A2C3	7-9
A1A1A5C6	4	Same as A1A1A2C1	7-9
A1A1A5C7	4	Same as A1A1A2C1	7-9
A1A1A5C8	4	CAPACITOR, VARIABLE: 5.5 - 18 pf; 18796 part no. 538-011A; 30669 part no. 0327-3610	7-9
A1A1A5C9	4	Same as A1A1A2C25	7-9
A1A1A5C10	4	CAPACITOR, FIXED MICA DIELECTRIC: 51 pf, ±5%, 500 vdc; 72136 part no. DM15-510J; 30669 part no. 0317-5210	7-9
A1A1A5C11	4	Same as A1A1A2C15	7-9
A1A1A5C12	4	Same as A1A1A2C15	7-9
A1A1A5C13	4	Not Used	7-9
A1A1A5C14	4	Same as A1A1A2C1	7-9
A1A1A5C15	4	Same as A1A1A2C15	7-9
A1A1A5C16	4	Same as A1A1A2C15	7-9

Note 3. See Appendix A for AN/USM-281E configuration of A1A1A4.
Note 4. See Appendix A for AN/USM-281E configuration of A1A1A5.

TABLE 7-2. OSCILLOSCOPE AN/USM-281D, PARTS LIST(CONT)

Oscilloscope OS-246(P)/U (A1)

Reference Designation	Notes	Name and Description	Figure Number
A1A1A5C17	4	Same as A1A1A2C25	7-9
A1A1A5C18	4	Same as A1A1A2C1	7-9
A1A1A5C19	4	Same as A1A1A2C1	7-9
A1A1A5C20	4	Same as A1A1A2C9	7-9
A1A1A5K1	4	RELAY, REED: 15636 part no. RA 30381051; 30669 part no. 0503-2840	7-9
A1A1A5L1	4	Table 7-3; Item No. 10	7-9
A1A1A5L2	4	Same as A1A1A5L1	7-9
A1A1A5L3	4	Table 7-3; Item No. 11	7-9
A1A1A5L4 to A1A1A5L6	4	Same as A1A1A5L3	7-9
A1A1A5L7	4	Table 7-3; Item No. 1	7-9
A1A1A5L8 to A1A1A5L10	4	Same as A1A1A5L7	7-9
A1A1A5MP1	4	PRINTED CIRCUIT BOARD: 30669 part no. 4003-1453	7-9
A1A1A5MP2	4	TERMINAL, STUD: Insulated; 30669 part no. 4101-1400	7-9
A1A1A5MP3	4	Same as A1A1A5MP2	7-9
A1A1A5MP4	4	CONTACT, ELECTRICAL: 30669 part no. 5102-2510	7-9
A1A1A5MP5	4	Same as A1A1A5MP4	7-9
A1A1A5MP6	4	PIN, FORMED; 30669 part no. 5102-2760	7-9
A1A1A5MP7	4	Same as A1A1A5MP6	7-9
A1A1A5MP8	4	TERMINAL, FORMED: 30669 part no. 5102-2800	7-9
A1A1A5MP9 to A1A1A5MP20	4	Same as A1A1A5MP8	7-9
A1A1A5MP21 to A1A1A5MP32	4	Same as A1A1A2MP39	7-9
A1A1A5MP33	4	HEATSINK: TO-5; 30669 part no. 8100-5890	7-9
A1A1A5MP34	4	Same as A1A1A5MP33	7-9
A1A1A5MP35	4	HEATSINK: TO-5; 30669 part no. 8100-5900	7-9
A1A1A5MP36	4	Same as A1A1A5MP35	7-9
A1A1A5Q1 to A1A1A5Q8	4	Same as A1A1A2Q14	7-9
A1A1A5Q9	4	TRANSISTOR: NPN; 18714 part no. 2N5109; 30669 part no. 2601-0520	7-9
A1A1A5Q10	4	Same as A1A1A5Q9	7-9
A1A1A5Q11	4	TRANSISTOR: NPN; 04713 part no. 2N3866; 30669 part no. 2601-0530	7-9
A1A1A5Q12	4	Same as A1A1A5Q11	7-9
A1A1A5R1	4	RESISTOR, FIXED, FILM: 90.9 ohms, ±1%, 1/8 w; 91637 part no. MFF1-8-90R9T1; 30669 part no. 0238-8760	7-9
A1A1A5R2	4	RESISTOR, FIXED, COMPOSITION: 430 ohms, 1/2 w; 01121 part no. EB4315; 30669 part no. 0203-0390	7-9
A1A1A5R3	4	RESISTOR, VARIABLE: 100 ohms; 32997 part no. 3369P1101A; 30669 part no. 0109-6510	7-9
A1A1A5R4	4	Same as A1A1A5R2	7-9
A1A1A5R5	4	Same as A1A1A5R1	7-9
A1A1A5R6	4	Table 7-3; Item No. 27	7-9

Note 4. See Appendix A for AN/USM-281E configuration of A1A1A5.

TABLE 7-2. OSCILLOSCOPE AN/USM-281D, PARTS LIST(CONT)

Oscilloscope OS-246(P)/U (A1)

Reference Designation	Notes	Name and Description	Figure Number
A1A1A5R7	4	Same as A1A1A2R64	7-9
A1A1A5R8	4	RESISTOR, FIXED, COMPOSITION: 510 ohms, 1/2 w; 01121 part no. EB5115; 30669 part no. 0203-0410	7-9
A1A1A5R9	4	Same as A1A1A1A1R19	7-9
A1A1A5R10	4	RESISTOR, FIXED, FILM: 243 ohms, ±10%, 1/8 w; 91637 part no. MFF1-8-2430T1; 30669 part no. 0238-8810	7-9
A1A1A5R11	4	Same as A1A1A5R10	7-9
A1A1A5R12	4	Same as A1A1A2R44	7-9
A1A1A5R13	4	Same as A1A1A2R44	7-9
A1A1A5R14	4	Same as A1A1A1A1R1	7-9
A1A1A5R15	4	RESISTOR, FIXED, COMPOSITION: 910 ohms, 1/2 w; 01121 part no. EB9115; 30669 part no. 0203-0470	7-9
A1A1A5R16	4	Same as A1A1A5R15	7-9
A1A1A5R17	4	RESISTOR, FIXED: COMPOSITION: 33 ohms, 1/4 w; 01121 part no. CB3305; 30669 part no. 0235-4260	7-9
A1A1A5R18	4	Same as A1A1A2R35	7-9
A1A1A5R19	4	Same as A1A1A2R54	7-9
A1A1A5R20	4	Same as A1A1A5R1	7-9
A1A1A5R21	4	RESISTOR, FIXED, COMPOSITION: 240 ohms; 1/2 w; 01121 part no. EB2415; 30669 part no. 0203-0330	7-9
A1A1A5R22	4	Same as A1A1A5R21	7-9
A1A1A5R23	4	RESISTOR, FIXED, FILM: 301 ohms, ±1%, 1 w; 24546 part no. C6-301F; 30669 part no. 0237-7930	7-9
A1A1A5R24	4	Same as A1A1A5R24	7-9
A1A1A5R25	4	Same as A1A1A1A1R1	7-9
A1A1A5R26	4	Same as A1A1A1A1R1	7-9
A1A1A5R27	4	RESISTOR, FIXED, COMPOSITION: 470 ohms, 2 w; 01121 part no. HB4715; 30669 part no. 0203-6400	7-9
A1A1A5R28	4	Same as A1A1A5R27	7-9
A1A1A5R29	4	Same as A1A1A5R1	7-9
A1A1A5R30	4	RESISTOR, FIXED COMPOSITION: 180 ohms, 1/4 w; 01121 part no. CB1815; 30669 part no. 0235-4440	7-9
A1A1A5R31	4	RESISTOR, FIXED, FILM: 220 ohms, ±5%, 3 w; 24546 part no. FP3-220J3W; 30669 part no. 0238-9160	7-9
A1A1A5R32	4	Not Used	7-9
A1A1A5R33	4	Table 7-3; Item No. 30	7-9
A1A1A5R34	4	Same as A1A1A5R33	7-9
A1A1A5R35	4	Same as A1A1A5R31	7-9
A1A1A5R36	4	Not Used	7-9
A1A1A5R37	4	RESISTOR, FIXED, COMPOSITION: 5,100 ohms, 1 w; 01121 part no. GB5125; 30669 part no. 0203-3650	7-9
A1A1A5R38	4	RESISTOR, FIXED, FILM: 392 ohms, ±1%, 4w; 24546 part no. FP4-392F5W; 30669 part no. 0238-9170	7-9
A1A1A5R39	4	RESISTOR, FIXED, WIRE WOUND: 180 ohms, ±5%, 4w; 80031 part no. P300-180J4W; 30669 part no. 0238-9350	7-9
A1A1A5R40	4	Same as A1A1A5R38	7-9
A1A1A5R41	4	Same as A1A1A2R5	7-9
A1A1A5R42	4	RESISTOR, FIXED, COMPOSITION: 18,000 ohms, 1/4 w; 01121 part no. CB1835;30669 part no. 0235-4910	7-9
A1A1A5R43	4	Same as A1A1A3R9	7-9
A1A1A5R44	4	RESISTOR, FIXED, FILM: 12.1 ohms, ±1%, 1/8 w; 91637 part no. MFF1-8-12R1T1; 30669 part no. 0238-9750	7-9

Note 4. See Appendix A for AN/USM-281E configuration of A1A1A5.

TABLE 7-2. OSCILLOSCOPE AN/USM-281D, PARTS LIST(CONT)

Oscilloscope OS-246(P)/U (A1)

Reference Designation	Notes	Name and Description	Figure Number
A1A1A5R45	4	Same as A1A1A1A1R12	7-9
A1A1A5XQ1 to A1A1A5XQ12	4 4	Same as A1A1A1A1XQ1	7-9
A1A1A5Z1	4	INDUCTOR ASSEMBLY: 30669 part no. 2101-9553	7-9
A1A1A5Z2	4	Same as A1A1A5Z1	7-9
A1A1A5Z3	4	INDUCTOR ASSEMBLY: 30669 part no. 2101-9551	7-9
A1A1A5Z4	4	Same as A1A1A5Z3	7-9
A1A1A6	5	DISPLAY PANEL ASSEMBLY: 30669 part no. 8901-7784	7-10
A1A1A6LT1	5	LIGHT, INDICATOR: Green lens; 07137 part no. RCLB52-2187-000; 30669 part no. 1201-2610	7-10
A1A1A6MP1	5	CASTING, BEZEL: 30669 part no. 3507-7573 (Attaching Parts) B (2)	7-10
A1A1A6MP2	5	TERMINAL, FEEDTHRU: Insulated; 30669 part no. 5102-2750	7-10
A1A1A6MP3	5	Same as A1A1A6MP2	7-10
A1A1A6MP4	5	VERNIER DIAL, DELAY: Vernier, 10 turn; 12697 part no. 461; 30669 part no. 4501-0920	7-10
A1A1A6MP5	5	PANEL: 30669 part no. 3201-7711 (Attaching Parts) SCREW, MACHINE: Flat Head, no. 6-32 x 3/8 in. lg.; 30669 part no. 6009-6680 (1)	7-10
A1A1A6MP6	5	CLIP, RETAINING: 30669 part no. 3702-1220	7-10
A1A1A6MP7	5	RECEPTICLE: 30669 part no. 5102-2000	7-10
A1A1A6MP8	5	TERMINAL, LUG: 30669 part no. 5100-5240	7-10
A1A1A6MP9	5	PANEL: 30669 part no. 3201-7731 (Attaching Parts) SCREW, MACHINE: Flat head, cross recessed, thread forming, no. 6-32 x 5/16 in. lg.; 30669 part no. 6043-0510 (4)	7-10
A1A1A6MP10	5	CASTING, DISPLAY PANEL: 30669 part no. 3507-7573	7-10
A1A1A6R1	5	RESISTOR, VARIABLE: 5 megohm, ±30%, 71590 part no. Model 3 - 5 meg; 30669 part no. 0107-3521 (Attaching Parts) NUT, HEXAGON: No. 1/4-32, 5/16 A.F.; 30669 part no. 6103-4510 (1) WASHER, LOCK: Internal tooth, no. 1/4; 30669 part no. 6220-0070 (1)	7-10
A1A1A6R2	5	Not Used	7-10
A1A1A6R3	5	RESISTOR, VARIABLE: 2,000 ohms; 30669 part no. 0109-0920 (Attaching Parts) H (1), O (1)	7-10
A1A1A6R4	5	RESISTOR, VARIABLE: 5,000 ohms, ±20%; 71590 part no. Model 3 - 5K PORM 20; 30669 part no. 0107-3501 (Attaching Parts) NUT, HEXAGON: No. 1/4-32, 5/16 A.F.; 30669 part no. 6103-4510 (1) WASHER, LOCK: Internal tooth, no. 1/4; 30669 part no. 6220-0070 (1)	7-10
A1A1A6R5	5	RESISTOR, VARIABLE: Dual, 10,000 ohms; 30669 part no. 0107-3481 (Attaching Parts) H (1), O (1)	7-10
A1A1A6R6	5	RESISTOR, VARIABLE; Part of A1A1A6R5	7-10
A1A1A6S1	5	SWITCH, TOGGLE: On-off; 95146 part no. MST105D; 30669 part no. 0503-2490	7-10
A1A1A6S2	5	SWITCH, PUSH: Spdt; 81073 part no. 46-101B; 30669 part no. 0503-2780 (Attaching Parts) NUT, HEXAGON: No. 1/4-32, 5/16 A.F.; 30669 part no. 6103-4510	7-10
A1A1A6S3	5	Same as A1A1A6S1	7-10
A1A1A6TB1	5	TERMINAL BOARD: 30669 part no. 4101-3361	7-10

Note 4. See Appendix A for AN/USM-281E configuration of A1A1A5.

Note 5. See Appendix A for AN/USM-281E configuration of A1A1A6.

TABLE 7-2. OSCILLOSCOPE AN/USM-281D, PARTS LIST(CONT)

Oscilloscope OS-246(P)/U (A1)

Reference Designation	Notes	Name and Description	Figure Number
A1A1A7		WIRING HARNESS, MAIN: 30669 part no. 5028-9981	7-11
A1A2		SECTION ASSEMBLY, PLUG-IN: 30669 part no. 8901-7904	7-11
A1A2DL1		DELAY LINE ASSEMBLY: 30669 part no. 8800-3221	7-11
A1A2J1		CONNECTOR, RECEPTACLE, ELECTRICAL: 16 pin; 00779 part no. 26-190-24; 30669 part no. 0906-0240	7-11
		(Attaching Parts) NUT, HEXAGON: Self-locking, no. 4-40; 30669 part no. 6102-8530 (2), SCREW, MACHINE: Binding head, no. 4-40 x 3/8 in lg; 30669 part no. 6009-6100	
A1A2J2		CONNECTOR, RECEPTACLE, ELECTRICAL: 24 pin; 00779 part no. 26-190-16; 30669 part no. 0906-0250	7-11
		(Attaching Parts) NUT, HEXAGON: Self-locking, no. 4-40; 30669 part no. 6102-8530 (2), SCREW, MACHINE: Binding head, no. 4-40 x 3/8 in lg; 30669 part no. 6009-6100	
A1A2MP1		CLAMP, CABLE: 30669 part no. 3700-9410	7-11
		(Attaching Parts) SCREW, MACHINE: Binding head, no. 6-32 x 5/16	7-11
		in lg; 30669 part no. 6009-6680 (1), N (1), WASHER: D; 30669 part	7-11
		no. 6201-0360 (1)	7-11
A1A2MP2		CLAMP, CABLE: 30669 part no. 3700-9410	7-11
		(Attaching Parts) SCREW, MACHINE: Binding head, no. 6-32 x 3/8	7-11
		in lg; 30669 part no. 6009-6170 (1), N (1), WASHER: D; 30669 part	7-11
		no. 3700-9410 (1)	
A1A2MP3		EXTRUSION, T-JOINT: Left; 30669 part no. 3507-7767	7-11
		(Attaching Parts) SCREW, MACHINE: Binding head, no. 6-32 x 3/16 in lg; 30669 part no. 6000-4650 (7), (G) 1	
A1A2MP4		EXTRUSION, T-JOINT: Right; 30669 part no. 3507-7719	7-11
		(Attaching Parts) SCREW, MACHINE: Binding head, no. 6-32 x 3/16 in lg; 30669 part no. 6000-4650 (7), G (1)	
A1A2MP5		CHASSIS, CONNECTOR: 30669 part no. 3103-5661	7-11
		(Attaching Parts) B (2)	
A1A2MP6		SUPPORT, UPPER: 30669 part no. 3103-5662	7-11
A1A2MP7		CASTING, FINISHED: 30669 part no. 3507-7731	7-11
A1A2MP8		CASTING, FINISHED: 30669 part no. 3507-7673	7-11
A1A2MP9		GUIDE, TOP: 30669 part no. 3507-7722	7-11
A1A2MP10		GUIDE, BOTTOM: 30669 part no. 3507-7724	7-11
A1A2MP11		TERMINAL, COAXIAL: 30669 part no. 5101-8921	7-11
A1A2MP12		Same as A1A2MP11	7-11
A1A2W1		CABLE ASSEMBLY, JUMPER: 30669 part no. 5028-9667	7-11
A1A2A1		CABLE ASSEMBLY, POWER: 30669 part no. 5028-9664	7-11
A1A2A2		CABLE ASSEMBLY, REAR: 30669 part no. 5028-9662	7-11
A1A2A3		CABLE ASSEMBLY, COAXIAL, FRONT: 30669 part no. 5028-9991	7-11
A1A2A4		Not Used	7-11
A1A2A5		Not Used	7-11
A1A2A6		POWER SUPPLY, LOW VOLTAGE: 30669 part no. 8901-7787	7-12
		(Attaching Parts) SCREW, THREAD FORMING: Phillips, pan head, no. 6-32 x 3/8 in. lg; 30669 part no. 6043-0530 (4), N (2)	
A1A2A6C1		CAPACITOR, FIXED, ELECTROLYTIC: 500 uf, +100-10%, 200 vdc, 90201 part no. WP123AP100M10PCT: 30669 part no. 0328-1380	7-12
		(Attaching Parts) SCREW, MACHINE: Binding head, no. 10-32 x 5/8 in. lg; 30669 part no. 6009-6430(1), J(1), E(3), I(3), N(3)	

TABLE 7-2. OSCILLOSCOPE AN/USM-281D, PARTS LIST(CONT)

Oscilloscope OS-246(P)/U (A1)

Reference Designation	Notes	Name and Description	Figure Number
A1A2A6C2		CAPACITOR, FIXED, ELECTROLYTIC: 8400 uf, 40 vdc; 56289 part no. 36D842G040BB2C; 30669 part no. 0328-1190 (Attaching Parts) SCREW, MACHINE: Binding head, no. 4-40 x 7/8 in. lg; 30669 part no. 6000-4390(2), M(2), NUT, HEXAGON: no. 4-40, 30669 part no. 6100-0240(2)	7-12
A1A2A6C3		CAPACITOR, FIXED, ELECTROLYTIC: 4,000 uf, 30 vdc; 90201 part no. SP0310757; 30669 part no. 0328-1370 (Attaching Parts) SCREW, MACHINE: Binding head, no. 4-40 x 7/8 in. lg; 30669 part no. 6000-4390(2), M(2), NUT, HEXAGON: no. 4-40, 30669 part no. 6100-0240(2)	7-12
A1A2A6F1		Not Used	7-12
A1A2A6F2		FUSE, CARTRIDGE: 1/2 amp; 75915 part no. 312-500; 30669 part no. 1100-0740	7-12
A1A2A6F3		FUSE, CARTRIDGE: 1/8 amp; 71400 part no. AGC1-8; 30669 part no. 1100-0710	7-12
A1A2A6MP1		BRACKET, CAPACITOR MOUNTING: 30669 part no. 3505-0740	7-12
A1A2A6MP2		TERMINAL, FEED-THRU: Insulated; 30669 part no. 4101-0070	7-12
A1A2A6MP3		Same as A1A2A6MP2	7-12
A1A2A6MP4		Same as A1A2A6MP2	7-12
A1A2A6MP5		COVER, TRANSISTOR: 30669 part no. 4202-5551 (Attaching Parts) SCREW, MACHINE: Binding head, no. 4-40 x 5/8 in. lg; 30669 part no. 6009-6120(2)	7-12
A1A2A6MP6		Same as A1A2A6MP5	7-12
A1A2A6MP7		Same as A1A2A6MP5	7-12
A1A2A6MP8		PLATE, MOUNTING, CAPACITOR: 30669 part no. 3500-0280	7-12
A1A2A6MP9		Same as A1A2A6MP8	7-12
A1A2A6MP10		CLAMP, CAPACITOR: 30669 part no. 3701-3751	7-12
A1A2A6MP11		Same as A1A2A6MP10	7-12
A1A2A6MP12		HEAT SINK, L.V. POWER SUPPLY: 30669 part no. 8100-4511 (Attaching Parts) B(3), N(3)	7-12
A1A2A6MP13		WAFER, INSULATOR: 30669 part no. 4101-2340	7-12
A1A2A6MP14		WAFER, INSULATOR: 30669 part no. 4101-2350	7-12
A1A2A6MP15		Same as A1A2A6MP14	7-12
A1A2A6MP16		TERMINAL, LUG: Ground, 30669 part no. 5100-4430 (Attaching Parts) E(1), I(1)	7-12
A1A2A6MP17		Same as A1A2A6MP16	7-12
A1A2A6MP18		CHASSIS, LOW VOLTAGE: 30669 part no. 3103-5656	7-12
A1A2A6Q1		TRANSISTOR: NPN; 18714 part no. 2N3442; 30669 part no. 2600-9150 (Attaching Parts) SCREW, SHEET METAL: 30669 part no. 6040-3460(2)	7-12
A1A2A6Q2		Same as A1A1A4Q1	7-12
A1A2A6Q3		TRANSISTOR: PNP; 04713 part no. 2N4898; 30669 part no. 2601-0450 (Attaching Parts) SCREW, SHEET METAL: 30669 part no. 6040-3460(2)	7-12
A1A2A6T1		TRANSFORMER, POWER, STEP-DOWN: 30669 part no. 2101-9611 (Attaching Parts) J(4), WASHER, FLAT: No. 10; 30669 part no. 6200-748(8), WASHER, LOCK: Split, no. 10; 30669 part no. 6210-0050(4)	7-12

TABLE 7-2. OSCILLOSCOPE AN/USM-281D, PARTS LIST(CONT)

Oscilloscope OS-246(P)/U (A1)

Reference Designation	Notes	Name and Description	Figure Number
A1A2A6XF1		Not Used	7-12
A1A2A6XF2		FUSEHOLDER: 75915 part no. 357002; 30669 part no. 1100-7790	7-12
		(Attaching Parts) SCREW, MACHINE: Binding head, no. 6-32 x 3/8 in. lg; 30669 part no. 6009-6170(2), I(2), N(2)	
A1A2A6XF3		Same as A1A2A6F2	7-12
A1A2A6XQ1		SOCKET, TRANSISTOR: TO-3; 22753 part no. PTS2A; 30669 part no. 3401-0990	7-12
A1A2A6XQ2		Same as A1A1A4XQ1	7-12
A1A2A6XQ3		Same as A1A1A4XQ1	7-12
A1A2A6A1	6	PRINTED CIRCUIT ASSEMBLY, LOW VOLTAGE: 30669 part no. 8901-7817	7-13
A1A2A6A1CR1 to A1A2A6A1CR7	6	Same as A1A1A1A1CR1	
A1A2A6A1CR8	6	SEMICONDUCTOR DEVICE, DIODE: Zener; 04713 part no. 1N4764A; 30669 part no. 2601-0510	7-13
A1A2A6A1CR9	6	SEMICONDUCTOR DEVICE, DIODE: Zener; 04713 part no. 1N936A; 30669 part no. 2601-0500	7-13
A1A2A6A1CR10 to A1A2A6A1CR19	6	Same as A1A1A4CR1	7-13
A1A2A6A1C1	6	CAPACITOR, FIXED, ELECTROLYTIC: 6.8 uf, 35 vdc; 56289 part no. 150D685X9035; 30669 part no. 0328-1250	7-13
A1A2A6A1C2	6	CAPACITOR, FIXED, FILM DIELECTRIC: 5,600 pf, 100 vdc; 56289 part no. 225P56291; 30669 part no. 0328-1346	7-13
A1A2A6A1C3	6	CAPACITOR, FIXED, CERAMIC DIELECTRIC: 20 pf; 18796 part no. 831-000U2J0-200J; 30669 part no. 0328-1270	7-13
A1A2A6A1C4	6	Same as A1A2A6A1C2	7-13
A1A2A6A1C5	6	Same as A1A1A2C13	7-13
A1A2A6A1C6	6	Same as A1A2A6A1C1	7-13
A1A2A6A1C7	6	Same as A1A2A6A1C1	7-13
A1A2A6A1C8	6	Same as A1A2A6A1C2	7-13
A1A2A6A1C9	6	Same as A1A2A6A1C3	7-13
A1A2A6A1C10	6	Same as A1A2A6A1C2	7-13
A1A2A6A1C11	6	Same as A1A1A2C16	7-13
A1A2A6A1C12	6	Same as A1A1A3C3	7-13
A1A2A6A1C13	6	Same as A1A1A3C8	7-13
A1A2A6A1C14	6	Same as A1A2A6A1C3	7-13
A1A2A6A1C15	6	CAPACITOR, FIXED, ELECTROLYTIC: 100 uf, 50 vdc, 56289 part no. 30D107G050DH2; 30669 part no. 0328-1360	7-13
A1A2A6A1IC1	6	INTEGRATED CIRCUIT: 04713 part no. MC1709CG; 30669 part no. 2601-0490	
A1A2A6A1IC2	6	Same as A1A2A6A1IC1	7-13
A1A2A6A1IC3	6	Same as A1A2A6A1IC1	7-13
A1A2A6A1MP1	6	TERMINAL, FORMED: 30669 part no. 5102-2800	7-13
A1A2A6A1MP2 to A1A2A6A1MP28	6	Same as A1A2A6A1MP1	7-13
A1A2A6A1MP29 to A1A2A6A1MP36	6	Same as A1A1A2MP39	7-13

Note 6. See Appendix A for AN/USM-281E configuration of A1A2A6A1.

TABLE 7-2. OSCILLOSCOPE AN/USM-281D, PARTS LIST(CONT)

Oscilloscope OS-246(P)/U (A1)

Reference Designation	Notes	Name and Description	Figure Number
A1A2A6A1MP37	6	PRINTED CIRCUIT BOARD: 30669 part no. 4003-1495	7-13
A1A2A6A1Q1	6	Same as A1A1A2Q7	7-13
A1A2A6A1Q2	6	Same as A1A1A2Q7	7-13
A1A2A6A1Q3	6	TRANSISTOR: NPN; 04713 part no. 2N3053; 30669 part no. 2601-0550	7-13
A1A2A6A1Q4	6	Table 7-3; Item No. 51	7-13
A1A2A6A1Q5	6	Same as A1A1A1A1Q1	7-13
A1A2A6A1Q6	6	TRANSISTOR: PNP; 04713 part no. 2N4890; 30669 part no. 2601-0560	7-13
A1A2A6A1R1	6	RESISTOR, VARIABLE: 500 ohms±10%, 1/2w; 84048 part no. 120-002500 PORM 10; 30669 part no. 0109-6330	7-13
A1A2A6A1R2	6	RESISTOR, FIXED, FILM: 8,450 ohms, ±1%; 1/8 w; 91637 part no. MFF1-8-8451T1; 30669 part no. 0238-9030	7-13
A1A2A6A1R3	6	RESISTOR, FIXED, FILM: 4,990 ohms, ±1%, 1/8 w; 91637 part no. MFF1-8-4991T1; 30669 part no. 0238-9010	7-13
A1A2A6A1R4	6	RESISTOR, FIXED, COMPOSITION: 820 ohms, 1/4 w; 01121 part no. CB8215; 30669 part no. 0235-4600	7-13
A1A2A6A1R5	6	Same as A1A1A2R27	7-13
A1A2A6A1R6	6	Same as A1A1A1A1R12	7-13
A1A2A6A1R7	6	Table 7-3; Item No. 24	7-13
A1A2A6A1R8	6	Same as A1A2A6A1R7	7-13
A1A2A6A1R9	6	RESISTOR, FIXED, COMPOSITION: 200 ohms, 1/4 w; 01121 part no. CB2015; 30669 part no. 0235-4450	7-13
A1A2A6A1R10	6	RESISTOR, FIXED, COMPOSITION: 620 ohms, 1 w; 01121 part no. GB6215; 30669 part no. 0203-3430	
A1A2A6A1R11	6	RESISTOR, FIXED, WIREWOUND: 3ohms, ±5%, 2w; 84048 part no. BWH3PORM5-2W; 30669 part no. 0235-1360	7-13
A1A2A6A1R12	6	RESISTOR, FIXED, FILM: 7,150 ohms, ±1/2%, 1/8w; 91637 part no. MFF1-8-7151T2; 30669 part no. 0238-9330	7-13
A1A2A6A1R13	6	Same as A1A2A6A1R12	7-13
A1A2A6A1R14	6	Same as A1A1A2R27	7-13
A1A2A6A1R15	6	Same as A1A1A1A1R12	7-13
A1A2A6A1R16	6	Same as A1A2A6A1R7	7-13
A1A2A6A1R17	6	Same as A1A2A6A1R7	7-13
A1A2A6A1R18	6	Same as A1A2A6A1R9	7-13
A1A2A6A1R19	6	RESISTOR, FIXED, WIREWOUND: 2.2 ohms, ±5%, 2w; 84048 part no. BWH2-2PORM5-2W; 30669 part no. 0235-1370	7-13
A1A2A6A1R20	6	Same as A1A2A6A1R10	7-13
A1A2A6A1R21	6	RESISTOR, FIXED, COMPOSITION: 3.9 megohm, 1/4 w; 01121 part no. CB3955; 30669 part no. 0235-5470	7-13
A1A2A6A1R22	6	RESISTOR, FIXED, FILM: 47,500 ohms, ±1/2%; 1/8 w; 91637 part no. MFF1-8-4752T2; 30669 part no. 0238-9340	7-13
A1A2A6A1R23	6	RESISTOR, FIXED, FILM: 3,570 ohms, ±1/2%; 1/8 w; 91637 part no. MFF1-8 3571T2; 30669 part no. 0238-9320	7-13
A1A2A6A1R24	6	Same as A1A2A6A1R23	7-13
A1A2A6A1R25	6	Same as A1A1A2R27	7-13
A1A2A6A1R26	6	Same as A1A1A1A1R12	7-13
A1A2A6A1R27	6	Same as A1A1A2R6	7-13
A1A2A6A1R28	6	RESISTOR, FIXED, COMPOSITION: 560 ohms, 1/4 w; 01121 part no. CB5615; 30669 part no. 0235-4560	7-13
A1A2A6A1R29	6	RESISTOR, FIXED, WIREWOUND: 10 ohms, 5 w; 56289 part no. 243E1005; 30669 part no. 0238-8540	7-13

Note 6. See Appendix A for AN/USM-281E configuration of A1A2A6A1.

TABLE 7-2. OSCILLOSCOPE AN/USM-281D, PARTS LIST(CONT)

Oscilloscope OS-246(P)/U (A1)

Reference Designation	Notes	Name and Description	Figure Number
A1A2A6A1R30	6	Same as A1A1A2R32	7-13
A1A2A6A1R31	6	Same as A1A1A2R68	7-13
A1A2A6A1R32	6	RESISTOR, FIXED, WIREWOUND: 7,000 ohms, 5w; 56289 part no. 243E7025;30669 part no. 0238-8550	7-13
A1A2A6A1R33	6	RESISTOR, FIXED, COMPOSITION: 10 ohms, 1/2 w; 01121 part no. EB1005; 30669 part no. 0203-0000	7-13
A1A2A6A1XQ1 to A1A2A6A1XQ6	6	Same as A1A1A1A1XQ1	7-13
A1A2A6A2	6	CABLE ASSEMBLY, LOW VOLTAGE POWER SUPPLY: 30669 part no. 5028-9931	7-13
A1A3	7	MAIN FRAME COVER: 30669 part no. 8901-7905	7-14
A1A3MP1	7	MAIN COVER ASSEMBLY: 30669 part no. 3507-7753	7-14
A1A3MP2	7	REAR COVER ASSEMBLY: 30669 part no. 3507-7759	7-14
A1A3MP3 to A1A3MP6	7	BUMPER, RECESS: 30669 part no. 3801-8841 (Attaching Parts) SCREW, MACHINE: BH, no. 8-32 x 7/8 in. lg; 30669 part no. 6009-6290 (4), LOCKWASHER, INTERNAL TOOTH: no. 8; 30669 part no. 6220-0040 (4)	7-14
A1A3MP7 to A1A3MP10	7	BUMPER, RUBBER: 30669 part no. 3802-3120 (Attaching Parts) SCREW, MACHINE: BH, no. 8-32 x 3/8 in. lg; 30669 part no. 6009-6250 (4); LOCKWASHER, INTERNAL TOOTH: no. 8; 30669 part no. 6220-0040 (4)	7-14
A1A3MP11	7	SHIELD, CONETIC: 30669 part no. 4202-5551	7-14
A1A3MP12	7	HANDLE ASSEMBLY: 30669 part no. 6401-8311 (Attaching Parts) SCREW, MACHINE: FH, no. 8-32 x 7/16 in. lg; 30669 part no. 6401-8311 (2)	7-14
A1A3MP13	7	REAR DOOR COVER: 30669 part no. 6401-7006 (Attaching Parts) FOAM, PAD, ADHESIVE BACK: 30669 part no. 7403-5891 (1)	7-14
A1A3MP14 to A1A3MP17	7	LATCH: 30669 part no. 6401-8290 (Attaching Parts) PIN: 30669 part no. 6401-8310 (4)	7-14
A1A3MP18	7	EXTRUSION, RUBBER: 30669 part no. 7000-3631	7-14
A1A3MP19 to A1A3MP20	7	FASTENER, KNURLED: 30669 part no. 6401-8270 (Attaching Parts) WASHER, NYLON WARE: 30669 part no. 6201-2040 (2); RETAINER, SPLIT RING: 30669 part no. 3005-2200	7-14

Note 6. See Appendix A for AN/USM-281E configuration of A1A2A6A1.

Note 7. See Appendix A for AN/USM-281E configuration of A1A3.

TABLE 7-2. OSCILLOSCOPE AN/USM-281D, PARTS LIST(CONT)

Dual Trace Oscilloscope Plug-in Unit AM-6566/U (A2)

Reference Designation	Notes	Name and Description	Figure Number
A2		DUAL TRACE OSCILLOSCOPE PLUG-IN UNIT: MIL type AM-6566/U	7-15
A2MP1		Table 7-3; Item No.13	7-15
A2MP2		Same as A2MP1	7-15
A2MP3		Same as A1MP1	7-15
A2MP4		Same as A1MP1	7-15
A2MP5		KNOB: Round, red; 32767 part no. 1-503; 30669 part no. 4501-0940	7-15
A2MP6		Same as A2MP5	7-15
A2MP7		Same as A2MP5	7-15
A2MP8		KNOB: Bar, black; 30669 part no. 4501-3141	7-15
A2MP9		Same as A2MP8	7-15
A2MP10		Same as A2MP8	7-15
A2MP11		KNOB: Bar, black; 30669 part no. 4501-1010	7-15
A2MP12		TERMINAL, LUG: Grounding; 30669 part no. 5100-1200	7-15
A2MP13		TERMINAL, LUG: No. 6; 30669 part no. 5100-3620	7-15
A2MP14		Same as A2MP13	7-15
A2MP15		ROD, PLUG-IN: 30669 part no. 6401-6251 (Attaching Parts): SCREW, MACHINE: Round Head, No. 8-32 x 3/8 in lg; 30669 part no. 6009-7770 (1); WASHER, Lock; split, no. 8; 30669 part no. 6210-0040 (1)	7-15
A2MP16		BRACKET, ROD SUPPORT: 30669 part no. 3506-2594 (Attaching Parts): E (2); M (2)	7-15
A2MP17		CLAMP, CABLE: 30669 part no. 3702-1240	
A2MP18		SHIELD, PRE-AMPLIFIER ATTENUATOR: 30669 part no. 3103-5512 (Attaching Parts): B (2); N (2)	7-15
A2MP19		SUPPORT, ATTENUATOR BOARD: 30669 part no. 4501-3181 (Attaching Parts): SCREW, MACHINE: Flat head, no. 6-32 x 3/8 in lg; 30669 part no. 6009-6680 (1); NUT, SELF-RETAINING: No. 6-32; 30669 part no. 6103-9060 (1)	7-15
A2S1		SWITCH, ROTARY: Vertical Mode; 30669 part no. 0501-8693	7-15
A2A1		CABLE ASSEMBLY, ATTENUATOR: 30669 part no. 5028-9885	7-15
A2A2		CABLE ASSEMBLY, VERTICAL SECTION: 30669 part no. 5028-9941	7-15
A2A3	8	PRINTED CIRCUIT ASSEMBLY, LOGIC: 30669 part no. 8901-7803	7-16
A2A3CR1	8	Same as A1A1A3CR5	7-16
A2A3CR2	8	SEMICONDUCTOR DEVICE, DIODE: Zener; 71590 part no. 1N749A; 30669 part no. 2601-0620	7-16
A2A3CR3 to A2A3CR12	8	Same as A1A1A1A1CR1	7-16
A2A3C1	8	Same as A1A1A5C10	7-16
A2A3C2	8	Same as A1A1A5C10	7-16
A2A3C3	8	Same as A1A1A2C1	7-16
A2A3C4	8	Same as A1A1A2C3	7-16
A2A3C5	8	Same as A1A1A2C1	7-16
A2A3C6	8	Same as A1A1A2C3	7-16
A2A3C7	8	CAPACITOR, FIXED, MICA DIELECTRIC: 75 pf, ±5%, 500 vdc; 72136 part no. DM15-750J; 30669 part no. 0317-5250	7-16

Note 8. See Appendix A for AN/USM-281E configuration of A2A3.

TABLE 7-2. OSCILLOSCOPE AN/USM-281D, PARTS LIST(CONT)

Dual Trace Oscilloscope Plug-in Unit AM-6566/U (A2)

Reference Designation	Notes	Name and Description	Figure Number
A2A3C8	8	Not Used	7-16
A2A3C9	8	Not Used	7-16
A2A3C10 to A2A3C12	8	Same as A1A1A2C1	7-16
A2A3C13	8	CAPACITOR, FIXED, MICA DIELECTRIC: 200 pf, ±5%, 500 vdc; 72136 part no. DM15-201J; 30669 part no. 0317-5350	7-16 7-16
A2A3C14 to A2A3C16	8	Same as A2A3C13	7-16
A2A3IC1	8	INTEGRATED CIRCUIT: 18714 part no. CA3046, 30669 part no. 2601-0610	7-16
A2A3L1	8	Same as A1A1A5L1	7-16
A2A3L2	8	Not Used	7-16
A2A3L3	8	Same as A1A1A5L1	7-16
A2A3L4	8	Not Used	7-16
A2A3L5	8	Same as A1A1A5L7	7-16
A2A3L6	8	Same as A1A1A5L7	7-16
A2A3MP1	8	PRINTED CIRCUIT BOARD: 30669 part no. 4003-1530	7-16
A2A3MP2	8	PIN, FORMED: 30669 part no. 5102-2760	7-16
A2A3MP3	8	TERMINAL, FORMED: 30669 part no. 5102-2800	7-16
A2A3MP4 to A2A3MP22	8	Same as A2A3MP3	7-16
A2A3MP23 to A2A3MP36	8	Same as A1A1A2MP36	7-16
A2A3Q1	8	Same as A1A1A1A1Q1	7-16
A2A3Q2	8	Same as A1A1A1A1Q1	7-16
A2A3Q3	8	Table 7-3; Item No. 50	7-16
A2A3Q4	8	Same as A1A1A1A1Q1	7-16
A2A3Q5	8	Same as A1A1A1A1Q1	7-16
A2A3Q6 to A2A3Q9	8	Not Used	7-16
A2A3Q10	8	Same as A1A1A1A1Q1	7-16
A2A3Q11	8	Same as A1A1A1A1Q1	7-16
A2A3R1	8	RESISTOR, VARIABLE: 10,000 ohms; 32997 part no. 3329H1103; 30669 part no. 0109-6520	7-16
A2A3R2	8	Same as A1A1A2R23	7-16
A2A3R3	8	RESISTOR, FIXED, COMPOSITION: 62,000 ohms, 1/4 w; 01121 part no. CB6235; 30669 part no. 0235-5040	7-16
A2A3R4	8	Same as A1A1A2R35	7-16
A2A3R5	8	RESISTOR, FIXED, FILM: 562 ohms, ±1%, 1/8 w; 91637 part no. MFF1-8-5620T1; 30669 part no. 0238-9460	7-16
A2A3R6	8	Same as A2A3R5	7-16
A2A3R7	8	Same as A1A2A6A1R28	7-16
A2A3R8	8	Same as A1A1A2R35	7-16
A2A3R9	8	Same as A1A1A1A1R25	7-16
A2A3R10	8	Same as A1A1A2R35	7-16
A2A3R11	8	Same as A1A1A2R35	7-16

Note 8. See Appendix A for AN/USM-281E configuration of A2A3.

TABLE 7-2. OSCILLOSCOPE AN/USM-281D, PARTS LIST(CONT)

Dual Trace Oscilloscope Plug-in Unit AM-6566/U (A2)

Reference Designation	Notes	Name and Description	Figure Number
A2A3R12	8	Same as A1A1A5R42	7-16
A2A3R13	8	Same as A1A1A5R42	7-16
A2A3R14	8	RESISTOR, FIXED, COMPOSITION: 9,100 ohms, 1/4 w; 01121 part no. CB9125; 30669 part no. 0235-4840	7-16
A2A3R15	8	Same as A1A1A2R44	7-16
A2A3R16	8	Same as A1A1A2R23	7-16
A2A3R17	8	Same as A1A2A6A1R7	7-16
A2A3R18	8	RESISTOR, FIXED, COMPOSITION: 390 ohms, 1/4 w; 01121 part no. CB3915; 30669 part no. 0235-4520	7-16
A2A3R19	8	Same as A1A1A1A1R1	7-16
A2A3R20	8	RESISTOR, FIXED, COMPOSITION: 62 ohms, 1/4 w; 01121 part no. CB6205; 30669 part no. 0235-4330	7-16
A2A3R21	8	Same as A1A2A6A1R7	7-16
A2A3R22	8	Not Used	7-16
A2A3R23	8	Same as A1A1A2R35	7-16
A2A3R24	8	Same as A1A1A2R35	7-16
A2A3R25	8	Same as A1A1A5R6	7-16
A2A3R26	8	Not Used	7-16
A2A3R27	8	Same as A1A1A2R68	7-16
A2A3R28	8	Same as A1A1A2R68	7-16
A2A3R29	8	Same as A1A1A1A1R1	7-16
A2A3R30	8	Same as A1A1A1A1R1	7-16
A2A3R31	8	Same as A1A1A2R23	7-16
A2A3R32	8	Same as A1A1A2R23	7-16
A2A3R33	8	Same as A1A1A5R21	7-16
A2A3R34	8	Same as A1A1A2R64	7-16
A2A3R35	8	Same as A1A1A2R64	7-16
A2A3R36	8	Same as A1A1A1A1R19	7-16
A2A3R37	8	Same as A1A1A1A1R19	7-16
A2A3R38	8	Same as A1A1A5R6	7-16
A2A3R39	8	Same as A1A1A2R23	7-16
A2A3R40	8	Same as A1A1A2R23	7-16
A2A3R41	8	Same as A1A1A5R6	7-16
A2A3R42	8	Same as A1A1A2R35	7-16
A2A3R43	8	Same as A1A1A2R35	7-16
A2A3XIC1	8	SOCKET, INTEGRATED CIRCUIT: 91506 part no. 314AG5D2R; 30669 part no. 3401-1030	7-16
A2A3XQ1 to A2A3XQ5	8	Same as A1A1A1A1XQ1	7-16
A2A3XQ6 to A2A3XQ9	8	Not Used	7-16
A2A3XQ10	8	Same as A1A1A1A1XQ1	7-16
A2A3XQ11	8	Same as A1A1A1A1XQ1	7-16
A2A4		DELAY LINE ASSEMBLY: 30669 part no. 8901-7829	7-17
A2A4MP1		Tie Rap; 30669 part no. 3505-0780	7-17
A2A4MP2		CLAMP, DELAY LINE: 30669 part no. 3701-3801	7-17
A2A4MP3		BAND, MARKER: 30669 part no. 3900-1670	7-17
A2A4MP4		CABLE, DELAY: 5 feet, 30669 part no. 8800-3221	7-17
A2A5		VERTICAL SECTION PANEL ASSEMBLY: 30669 part no. 8901-7889	7-18

Note 8. See Appendix A for AN/USM-281E configuration of A2A3.

TABLE 7-2. OSCILLOSCOPE AN/USM-281D, PARTS LIST(CONT)

Dual Trace Oscilloscope Plug-in Unit AM-6566/U (A2)

Reference Designation	Notes	Name and Description	Figure Number
A2A5C1		CAPACITOR, FIXED, FILM DIELECTRIC: 0.1 uf, ±10%, 400 vdc, 84411 part no. X663F 400v; 30669 part no. 0318-3150	7-18
A2A5C2		Same as A2A5C1	7-18
A2A5J1		Same as A1A1A1J1	7-18
A2A5J2		Same as A1A1A1J1	7-18
A2A5J3		CONNECTOR, RECEPTACLE, ELECTRICAL: 16 pin, male contacts; 00779 part no. 26-169-16; 30669 part no. 0906-0220 (Attaching Parts) D (2), NUT, HEXAGON: selflocking, no. 4-40; 30669 part no. 6102-8530 (2)	7-18
A2A5J4		CONNECTOR, RECEPTACLE, ELECTRICAL: Male contacts; 98291 part no. 52-046-4220; 30669 part no. 0906-0270	7-18
A2A5MP1		KNOB: Knurled; 30669 part no. 4501-2191; (Attaching Parts) STUD, THREADED:No. 1/4-32; 30669 part no. 6091-1693(1);P(1) ;NUT,HEXAGON: No. 1/4-32 ; 30669 part no. 6103-1050(1)	7-18
A2A5MP2		SPRING, COIL: 30669 part no. 3005-9052	7-18
A2A5MP3		SPRING, COIL: 30669 part no. 3005-9053	7-18
A2A5MP4		SHAFT, LOCK: 30669 part no. 3005-9055	7-18
A2A5MP5		SLEEVE: 30669 part no. 3005-9051	7-18
A2A5MP6		LOCK, ARM: 30669 part no. 3005-9054	7-18
A2A6MP7		SUPPORT, PRE-AMPLIFIER: 30669 part no. 3103–5657; (Attaching Parts) I (1); N (1); RIVET: 30669 part no. 6303-0980	7-18
A2A5MP8		SUPPORT, VERTICAL: Left side; 30669 part no. 3103-5659; Attaching (Attaching Parts) RIVET: 30669 part no. 6303-0980	7-18
A2A5MP9		PANEL, FRONT: Function: 30669 part no. 3201-7691	7-18
A2A5MP10		BRACKET, CONNECTOR: 30669 part no. 3506-2592	7-18
A2A5MP11		X-WASHER: 30669 part no. 6240-7000	7-18
A2A5MP12		TERMINAL, LUG: 30669 part no. 5107-3210	7-18
A2A6MP13		Same as A2A5MP12	7-18
A2A5MP14		BUSHING, THREADED: No. 1/4-32 x 3/4 in. lg; 30669 part no. 4301-3571	7-18
A2A5MP15		Same as A2A5MP14	7-18
A2A5MP16		BUSHING, THREADED: No. 1/4-32 x 1/2 in.lg; 30669 part no. 4301-3572	7-18
A2A5MP17		Same as A2A5MP16	7-18
A2A5MP18		BUSHING, SHAFT: 30669 part no. 4301-3581	7-18
A2A5MP19 to A2A5MP21		Same as A2A5MP18	7-18
A2A5MP22		TERMINAL, LUG: No. 10; 30669 part no. 5100-1520	7-18
A2A5MP23		GUIDE, PLUG-IN: 30669 part no. 5200-8941; (Attaching Parts) SCREW,MACHINE :Binding head, no. 4-40 x 3/8 in. lg. 30669 part no. 6009-6100 (1) ; WASHER , FLAT:no. 4;30669 part no. 6200- 3650 (1); M(1) ; NUT , HEXAGON : No. 4-40; 30669 part no. 6100-0630 (1)	7-18
A2A5MP24		Same as A2A5MP23	7-18
A2A5R1		Same as A1A1A6R4	7-18
A2A5R2		Same as A1A1A6R4	7-18
A2A5R3		Same as A1A1A2R5	7-18
A2A5R4		Same as A1A1A2R5	7-18

TABLE 7-2. OSCILLOSCOPE AN/USM-281D, PARTS LIST(CONT)

Dual Trace Oscilloscope Plug-in Unit AM-6566/U (A2)

Reference Designation	Notes	Name and Description	Figure Number
A2A5S1		SWITCH, LEVER: 30669 part no. 0501-8671 (Attaching Parts) SPACER, THREADED No. 4-40 x 5/8 in. lg. ;30669 part no. 4301-4421 (4); M(4);STANDOFF ,THREADED:30669 part no. 5120-2850 (2)	7-18
A2A5S2		Same as A2A5S1	
A2A6	9	VERTICAL PRE-AMPLIFIER: 30669 part no. 8901-7788	7-19
A2A6CR1	9	Table 7-3; Item No. 46	7-19
A2A6CR2 to A2A6CR16	9	Same as A2A6CR1	7-19
A2A6CR17 to A2A6CR20	9	Same as A1A1A1A1CR1	7-19
A2A6C1	9	Same as A1A1A2C3	7-19
A2A6C2	9	Same as A1A1A2C3	7-19
A2A6C3	9	CAPACITOR, FIXED, MICA DIELECTRIC: 20pf, ±5%, 72136 part no. DM15-200J;30669 part no. 0317-5100	7-19
A2A6C4	9	Table 7-3; Item No. 3	7-19
A2A6C5	9	Same as A2A6C4	7-19
A2A6C6 to A2A6C8	9	Not Used	7-19
A2A6C9	9	CAPACITOR, FIXED, MICA DIELECTRIC: 33 pf, ±5%, 500 vdc; 72136 part no. DM15-330J; 30669 part no. 0317-5150	7-19
A2A6C10	9	Same as A2A6C4	7-19
A2A6C11	9	Same as A2A6C4	7-19
A2A6C12	9	Same as A1A1A2C1	7-19
A2A6C13	9	Same as A1A1A2C1	7-19
A2A6C14	9	Same as A1A1A2C3	7-19
A2A6C15	9	Same as A1A1A2C3	7-19
A2A6C16	9	Same as A2A6C4	7-19
A2A6C17	9	Same as A2A6C4	7-19
A2A6C18	9	Same as A2A6C3	7-19
A2A6C19	9	Same as A1A1A2C1	7-19
A2A6C20	9	Same as A1A1A2C1	7-19
A2A6C21	9	Same as A2A6C4	7-19
A2A6C22	9	Same as A2A6C4	7-19
A2A6C23 to A2A6C25	9	Not Used	7-19
A2A6C26	9	Same as A1A1A2C1	7-19
A2A6C27	9	Not Used	7-19
A2A6C28	9	Not Used	7-19
A2A6C29	9	Same as A2A6C9	7-19
A2A6C30 to A2A6C35	9	Not Used	7-19
A2A6C36	9	CAPACITOR, VARIABLE, CERAMIC DIELECTRIC: 5.5-18 pf; 18796 part no. 538-011A5-5-18PF; 30669 part no. 0327-3610	7-19
A2A6C37	9	Same as A2A6C36	7-19
A2A6IC1	9	Same as A2A3IC1	7-19
A2A6IC2	9	Same as A2A3IC1	7-19

Note 9. See Appendix A for AN/USM-281E configuration of A2A6.

TABLE 7-2. OSCILLOSCOPE AN/USM-281D, PARTS LIST(CONT)

Dual Trace Oscilloscope Plug-in Unit AM-6566/U (A2)

Reference Designation	Notes	Name and Description	Figure Number
A2A6L1	9	Same as A1A1A5L3	7-19
A2A6L2 to A2A6L5	9	Same as A1A1A5L7	7-19
A2A6L6	9	Same as A1A1A5L3	7-19
A2A6L7	9	Same as A1A1A5L1	7-19
A2A6L8	9	Same as A1A1A5L1	7-19
A2A6L9	9	Same as A1A1A5L3	7-19
A2A6L10	9	Same as A1A1A5L3	7-19
A2A6MP1	9	PIN, CONTACT: 30669 part no. 5102-2760	7-19
A2A6MP2 to A2A6MP26	9	Same as A2A6MP1	7-19
A2A6MP27	9	TERMINAL, FORMED: 30669 part no. 5102-2800	7-19
A2A6MP28 to A2A6MP60	9	Same as A2A6MP27	7-19
A2A6MP61	9	NUT, SELF-LOCKING: 30669 part no. 6103-5671	7-19
A2A6MP62	9	Same as A2A6MP61	7-19
A2A6MP63 to A2A6MP84	9	Same as A1A1A2MP39	7-19
A2A6MP85	9	PRINTED CIRCUIT BOARD: 30669 part no. 4003-1571	7-19
A2A6Q1	9	TRANSISTOR: Dual; 04713 part no. 2N3424; 30669 part no. 2601-0250	7-19
A2A6Q2	9	Same as A2A6Q1	7-19
A2A6Q3	9	Same as A1A1A1A1Q5	7-19
A2A6Q4	9	Not Used	
A2A6Q5	9	Not Used	7-19
A2A6Q6 to A2A6Q9	9	Same as A2A3Q3	7-19
A2A6Q10 to A2A6Q13	9	Same as A1A1A1A1Q1	7-19
A2A6Q14	9	Same as A2A6Q1	7-19
A2A6Q15	9	Same as A2A6Q1	7-19
A2A6Q16	9	Same as A1A1A1A1Q5	7-19
A2A6Q17	9	Not Used	7-19
A2A6Q18	9	Not Used	7-19
A2A6Q19 to A2A6Q22	9	Same as A2A3Q3	7-19
A2A6Q23	9	Same as A1A1A1A1Q1	7-19
A2A6Q24	9	Same as A1A1A1A1Q1	7-19
A2A6R1	9	Same as A1A1A1A1R12	7-19
A2A6R2	9	Same as A1A1A2R44	7-19
A2A6R3	9	Same as A1A1A2R44	7-19
A2A6R4	9	Same as A1A1A1A1R12	7-19
A2A6R5	9	Table 7-3; Item No. 40	7-19
A2A6R6	9	RESISTOR, FIXED, FILM: 2,000 ohms, ±1%, 1/8w; 91637 part no. MFF1-8-2001T1; 30669 part no. 0238-9450	7-19

Note 9. See Appendix A for AN/USM-281E configuration of A2A6.

TABLE 7-2. OSCILLOSCOPE AN/USM-281D, PARTS LIST(CONT)

Dual Trace Oscilloscope Plug-in Unit AM-6566/U (A2)

Reference Designation	Notes	Name and Description	Figure Number
A2A6R7	9	Same as A1A1A3R15	7-19
A2A6R8	9	RESISTOR, FIXED, FILM: 30.1 ohms, ±1%, 1/8w; 91637 part no. MFF1-8-30R1T1; 30669 part no. 0238-8730	7-19
A2A6R9	9	Same as A2A6R8	7-19
A2A6R10	9	Same as A1A1A3R15	7-19
A2A6R11	9	Not Used	7-19
A2A6R12	9	RESISTOR, FIXED, FILM: 301 ohms, ±1%, 1/8w; 91637 part no. MFF1-8-3010T1; 30669 part no. 0238-8820	7-19
A2A6R13	9	RESISTOR, FIXED, COMPOSITION: 75 ohms, 1/4w; 01121 part no. CB7505; 30669 part no. 0235-4350	7-19
A2A6R14	9	Same as A1A1A2R14	7-19
A2A6R15	9	Same as A1A1A2R14	7-19
A2A6R16	9	Same as A1A2A6A1R7	7-19
A2A6R17	9	Not Used	7-19
A2A6R18	9	Not Used	7-19
A2A6R19	9	Same as A1A1A2R20	7-19
A2A6R20	9	Same as A2A6R5	7-19
A2A6R21	9	Table 7-3; Item No. 39	7-19
A2A6R22	9	Same as A2A6R21	7-19
A2A6R23	9	Same as A2A6R21	7-19
A2A6R24	9	Same as A2A6R5	7-19
A2A6R25	9	Same as A1A1A2R35	7-19
A2A6R26	9	Same as A1A1A2R35	7-19
A2A6R27	9	Not Used	7-19
A2A6R28	9	Not Used	7-19
A2A6R29	9	RESISTOR, FIXED, COMPOSITION: 20 ohms, 1/4w; 01121 part no. CB2005; 30669 part no. 0235-4210	7-19
A2A6R30	9	Same as A2A6R29	7-19
A2A6R31	9	Same as A2A6R21	7-19
A2A6R32	9	Same as A2A6R21	7-19
A2A6R33	9	Same as A1A1A2R14	7-19
A2A6R34	9	Same as A2A3R18	7-19
A2A6R35	9	Same as A2A3R18	7-19
A2A6R36 to A2A6R39	9	Not Used	7-19
A2A6R40	9	RESISTOR, VARIABLE: 100,000 ohms; 32997 part no. 3329H1104; 30669 part no. 0109-6460	7-19
A2A6R41	9	RESISTOR, FIXED, COMPOSITION: 100 ohms, 1/8w; 01121 part no. BB1015; 30669 part no. 0203-8870	7-19
A2A6R42	9	Same as A2A6R41	7-19
A2A6R43	9	RESISTOR, FIXED, COMPOSITION: 15,000 ohms, 1 w; 01121 part no. GB1535; 30669 part no. 0203-3760	7-19
A2A6R44	9	RESISTOR, FIXED, COMPOSITION: 510 ohms, 1/8w; 01121 part no. BB5115; 30669 part no. 0203-8880	7-19
A2A6R45	9	Same as A2A6R44	7-19
A2A6R46	9	RESISTOR, FIXED, COMPOSITION: 510 ohms, 1/4w, 01121 part no. CB5115; 30669 part no. 0235-4550	7-19
A2A6R47	9	RESISTOR, FIXED, FILM: 93.1 ohms, ±1%, 1/8w; 91637 part no. MFF1-8-93R1T1; 30669 part no. 0238-9250	7-19
A2A6R48	9	Same as A2A6R47	7-19

Note 9. See Appendix A for AN/USM-281E configuration of A2A6.

TABLE 7-2. OSCILLOSCOPE AN/USM-281D, PARTS LIST(CONT)

Dual Trace Oscilloscope Plug-in Unit AM-6566/U (A2)

Reference Designation	Notes	Name and Description	Figure Number
A2A6R49 to A2A6R51	9	Not Used	7-19
A2A6R52	9	Same as A1A1A5R33	7-19
A2A6R53	9	RESISTOR, FIXED, FILM: 511 ohms, ±1%, 1/8w; 91637 part no. MFF1-8-5110T1; 30669 part no. 0238-9640	7-19
A2A6R54	9	RESISTOR, VARIABLE: 200 ohms; 32997 part no. 3329H1201; 30669 part no. 0109-6430	7-19
A2A6R55	9	Same as A2A6R53	7-19
A2A6R56	9	Same as A1A1A2R14	7-19
A2A6R57	9	Not Used	7-19
A2A6R58	9	Not Used	7-19
A2A6R59	9	Same as A1A1A1A1R12	7-19
A2A6R60	9	Same as A1A1A2R44	7-19
A2A6R61	9	Same as A1A1A2R44	7-19
A2A6R62	9	RESISTOR, FIXED, FILM: 715 ohms, ±1%, 1/8w; 91637 part no. MFF1-8-7150T1; 30669 part no. 0238-9430	7-19
A2A6R63	9	Same as A2A6R62	7-19
A2A6R64	9	Same as A1A1A1A1R12	7-19
A2A6R65	9	Same as A2A6R5	7-19
A2A6R66	9	Same as A2A6R6	7-19
A2A6R67	9	Same as A1A1A3R15	7-19
A2A6R68	9	Same as A2A6R8	7-19
A2A6R69	9	Same as A2A6R8	7-19
A2A6R70	9	Same as A1A1A3R15	7-19
A2A6R71	9	Not Used	7-19
A2A6R72	9	Same as A2A6R12	7-19
A2A6R73	9	Same as A1A1A2R14	7-19
A2A6R74	9	Same as A2A6R13	7-19
A2A6R75	9	Same as A1A1A2R14	7-19
A2A6R76	9	Same as A1A2A6A1R7	7-19
A2A6R77	9	Not Used	7-19
A2A6R78	9	Not Used	7-19
A2A6R79	9	Same as A1A1A2R20	7-19
A2A6R80	9	Same as A2A6R5	7-19
A2A6R81 to A2A6R83	9	Same as A2A6R21	7-19
A2A6R84	9	Same as A2A6R5	7-19
A2A6R85	9	Same as A1A1A2R35	7-19
A2A6R86	9	Same as A1A1A2R35	7-19
A2A6R87	9	Not Used	7-19
A2A6R88	9	Not Used	7-19
A2A6R89	9	Same as A2A6R29	7-19
A2A6R90	9	Same as A2A6R29	7-19
A2A6R91	9	Same as A2A6R21	7-19
A2A6R92	9	Same as A2A6R21	7-19
A2A6R93	9	Same as A1A1A2R14	7-19
A2A6R94	9	Same as A2A3R18	7-19
A2A6R95	9	Not Used	7-19
A2A6R96	9	Not Used	7-19

Note 9. See Appendix A for AN/USM-281E configuration of A2A6.

TABLE 7-2. OSCILLOSCOPE AN/USM-281D, PARTS LIST(CONT)

Dual Trace Oscilloscope Plug-in Unit AM-6566/U (A2)

Reference Designation	Notes	Name and Description	Figure Number
A2A6R97	9	Same as A2A3R18	7-19
A2A6R98	9	Not Used	7-19
A2A6R99	9	Not Used	7-19
A2A6R100	9	Same as A2A6R41	7-19
A2A6R101	9	Same as A2A6R40	7-19
A2A6R102	9	Same as A2A6R41	7-19
A2A6R103	9	Same as A2A6R43	7-19
A2A6R104	9	Same as A2A6R44	7-19
A2A6R105	9	Same as A2A6R44.	7-19
A2A6R106 to A2A6R108	9	Not Used	7-19
A2A6R109	9	Same as A1A1A5R33	7-19
A2A6R110	9	RESISTOR, FIXED, FILM: 619 ohms, ±1%, 1/8w; 91637 part no. MFF1-8-6190T1; 30669 part no. 0238-9570	7-19
A2A6R111	9	Same as A2A6R110	7-19
A2A6R112	9	Same as A1A1A2R14	7-19
A2A6R113	9	Not Used	7-19
A2A6R114	9	Not Used	7-19
A2A6R115	9	RESISTOR, FIXED, FILM: 866 ohms, ±1%, 1/4w; 91637 part no. MFF 1/4-8660-T1; 30669 part no. 0238-9270	7-19
A2A6R116	9	Same as A2A6R115	7-19
A2A6R117	9	RESISTOR, FIXED, FILM: 3,010 ohms, ±1%, 1/8w; 91637 part no. MFF1-8-3011T1; 30669 part no. 0238-8880	7-19
A2A6R118	9	Same as A2A6R117	7-19
A2A6R119 to A2A6R126	9	Not Used	7-19
A2A6R127	9	Same as A1A1A2R66	7-19
A2A6T1	9	INDUCTOR ASSEMBLY: 30669 part no. 2101-9561	7-19
A2A6T2	9	Same as A2A6T1	7-19
A2A6XIC1	9	Same as A2A3XIC1	7-19
A2A6XIC2	9	Same as A2A3XIC1	7-19
A2A6XQ1 to A2A6XQ3	9	Same as A1A1A1A1XQ1	7-19
A2A6XQ4	9	Not Used	7-19
A2A6XQ5	9	Not Used	7-19
A2A6XQ6 to A2A6XQ16	9	Same as A1A1A1A1XQ1	7-19
A2A6XQ17	9	Not Used	7-19
A2A6XQ18	9	Not Used	7-19
A2A6XQ19 to A2A6XQ24	9	Same as A1A1A1A1XQ1	7-19
A2A7		VERTICAL ATTENUATOR ASSEMBLY: 30669 part no. 8901-7785 (Attaching Parts): H (2); WASHER, LOCK: Internal tooth, no. 3/8; 30669 part no. 5101-1240 (2)	7-20
A2A7C1		CAPACITOR, FIXED, CERAMIC DIELECTRIC: 10 pf; 18796 part no. 301COG100C; 30669 part no. 0327-4020	7-20

Note 9. See Appendix A for AN/USM-281E configuration of A2A6.

TABLE 7-2. OSCILLOSCOPE AN/USM-281D, PARTS LIST(CONT)

Dual Trace Oscilloscope Plug-in Unit AM-6566/U (A2)

Reference Designation	Notes	Name and Description	Figure Number
A2A7C2 to A2A7C5		Not Used	7-20
A2A7C6		Table 7-3; Item No. 8	7-20
A2A7L1		Table 7-3; Item No. 1	7-20
A2A7MP1		COLLAR, SWITCH: 30669 part no. 3006-1071 (Attaching Parts): PIN, SPRING: 30669 part no. 6303-1040 (2)	7-20
A2A7MP2		BRACKET, MOUNTING: 30669 part no. 3507-7561	7-20
A2A7MP3		TERMINAL, LUG: No. 1/4; 30669 part no. 5100-5240 (Attaching Parts): NUT, HEXAGON: No. 1/4-32; 30669 part no. 6103-1050 (1)	7-20
A2A7MP4		RECEPTACLE, PIN: 30669 part no. 5102–2770	7-20
A2A7MP5 to A2A7MP13		Same as A2A7MP4	7-20
A2A7MP14		TORROID, FERRITE: 30669 part no. 2110-2580	7-20
A2A7MP15		SLEEVE: 30669 part no. 3006-7013	7-20
A2A7MP16		Same as A2A7MP15	7-20
A2A7MP17		Same as A2A7MP15	7-20
A2A7MP18		SLEEVE: 30669 part no. 3005-9048	7-20
A2A7R1		RESISTOR, VARIABLE: With switch A2A7S1, 10,000 ohms; 30669 part no. 0107-2938 Attaching Parts: NUT, HEXAGON: No. 1/4-32; 30669 part no. 6103-1050 (1) WASHER LOCK: No. 1/4; 30669 part no. 6620-0070 (1)	7-20
A2A7S1		SWITCH: Part of A2A7R1	7-20
A2A7A1		ATTENUATOR SWITCH ASSEMBLY: 30669 part no. 8901-7791	7-21
A2A7A1C1		Same as A1A1A2C22	7-21
A2A7A1C2		CAPACITOR, FIXED, CERAMIC DIELECTRIC: 6.8 pf; 18796 part no. 301C0G689C; 30669 part no. 0327-4030	7-21
A2A7A1C3		CAPACITOR, FIXED, CERAMIC DIELECTRIC: 13 pf; 18796 part no. 301-000NPO-130B; 30669 part no. 0319-7460	7-21
A2A7A1C4		CAPACITOR, FIXED, CERAMIC DIELECTRIC: 2.2 pf; 18796 part no. 301C0G229C; 30669 part no. 0327-4040	7-21
A2A7A1C5		CAPACITOR, FIXED, CERAMIC DIELECTRIC: 12 pf; 18796 part no. 301-000NPO-120K; 30669 part no. 0319-7440	7-21
A2A7A1C6		CAPACITOR, FIXED, CERAMIC DIELECTRIC: 1.5 pf; 18796 part no. 301-00C0G0-159B; 30669 part no. 0328-3130	7-21
A2A7A1C7		Same as A1A1A2C22	7-21
A2A7A1C8		Not Used	7-21
A2A7A1C9		Same as A1A1A2C22	7-21
A2A7A1C10		Not Used	7-21
A2A7A1C11		Same as A1A1A2C22	7-21
A2A7A1R1		Same as A2A3R20	7-21
A2A7A1R2		Same as A1A1A2R5	7-21
A2A7A1R3		RESISTOR, FIXED, FILM: 900,000 ohms, ±1/2%, 1/8 w; 91637 part no. MFF1-8-9003T1; 30669 part no. 0238-9690	7-21
A2A7A1R4		RESISTOR, FIXED, FILM: 990,000 ohms, ±1/2%, 1/8 w; 91637 part no. MFF1-8-9903T2; 30669 part no. 0238-9700	7-21
A2A7A1R5		RESISTOR, FIXED, FILM: 999,000 ohms, ±1/2%, 1/8 w; 91637 part no. MFF1-8-9993T2; 30669 part no. 0238-9710	7-21

TABLE 7-2. OSCILLOSCOPE AN/USM-281D. PARTS LIST(CONT)

Dual Trace Oscilloscope Plug-in Unit AM-6566/U (A2)

Reference Designation	Notes	Name and Description	Figure Number
A2A7A1R6		Same as A1A1A3R2	7-21
A2A7A1R7		RESISTOR, FIXED, FILM: 750,000 ohms, ±1%, 1/8 w; 91637 part no. MFF1-8-7503T1; 30669 part no. 0238-9620	7-21
A2A7A1R8		RESISTOR, FIXED, COMPOSITION: 30 ohms, 1/4 w; 01121 part no. CB3005; 30669 part no. 0235-4250	7-21
A2A7A1S1		SWITCH, ROTARY: 30669 part no. 9501-8652	7-21
A2A7A2		PRINTED CIRCUIT ASSEMBLY, ATTENUATOR: 30669 part no. 8991-7881	7-22
A2A7A2CR1		Same as A1A1A2CR21	7-22
A2A7A2CR2		Same as A1A1A2CR21	7-22
A2A7A2C1		Same as A1A1A2C1	7-22
A2A7A2C2		Same as A2A7C6	7-22
A2A7A2C3		Same as A2A7C6	7-22
A2A7A2C4		CAPACITOR, VARIABLE: 0.7-3pf; 30669 part no. 0319-1264	7-22
A2A7A2C5		Not Used	7-22
A2A7A2C6		CAPACITOR, FIXED, CERAMIC DIELECTRIC: 470,000pf, 50 V; 18796 part no. 8131-050-651474M; 30669 part no. 0328-1420	7-22
A2A7A2C7		CAPACITOR, FIXED, MICA DIELECTRIC: 100pf, ±10%, 18796 part no. 65400618A0101K; 30669 part no. 0313-9730	7-22
A2A7A2C8		CAPACITOR, VARIABLE: 0.7-3pf; 30669 part no. 0319-1263	7-22
A2A7A2C9		CAPACITOR, FIXED, CERAMIC DIELECTRIC: 1,000pf; 18796 part no. 301-000NPO-102K; 30669 part no. 0326-3070	7-22
A2A7A2C10		Same as A2A7C6	7-22
A2A7A2C11		CAPACITOR, VARIABLE: 0.7-3pf; 30669 part no. 0319-1266	7-22
A2A7A2C12		Same as A1A1A2C1	7-22
A2A7A2C13		Same as A2A7A1C5	7-22
A2A7A2C14		CAPACITOR, FIXED, CERAMIC DIELECTRIC: 5.5pf; 18796 part no. 374-005-C0G0-5590; 30669 part no. 0328-1400	7-22
A2A7A2C15		Same as A2A7A1C4	7-22
A2A7A2C16		CAPACITOR, FIXED, CERAMIC DIELECTRIC: 2,000pf; 71590 part no. DD202; 30669 part no. 0328-1230	7-22
A2A7A2MP1		RECEPTACLE, ELECTRICAL: 30669 part no. 5102-2730	7-22
A2A7A2MP2		Same as A2A7A2MP1	7-22
A2A7A2MP3		TERMINAL, STANDOFF: 30669 part no. 5101-9150	7-22
A2A7A2MP4		PIN, FORMED: 30669 part no. 5102-2760	7-22
A2A7A2MP5		Same as A2A7A2MP4	7-22
A2A7A2MP6		Same as A2A7A2MP4	7-22
A2A7A2MP7		CONTACT, ELECTRICAL, WIPER: 7344-0001 (Attaching Parts) RIVET: 6300-8450 (3)	7-22
A2A7A2MP8 to A2A7A2MP13		Same as A1A1A2MP39	7-22
A2A7A2MP14		BOARD, P.C.: Part no. D4003-1481	7-22
A2A7A2Q1		TRANSISTOR: Field effect: 17896 part no. U253; 30669 part no. 2601-0380	7-22
A2A7A2R1		RESISTOR, VARIABLE: 1,000 ohms; 30669 part no. 0107-3531	7-22
A2A7A2R2		Same as A1A1A2R2	7-22
A2A7A2R3		Same as A1A1A2R35	7-22
A2A7A2R4		Same as A1A1A2R35	7-22
A2A7A2R5		Same as A1A1A2k2	7-22
A2A7A2R6		Same as A1A1A2R63	7-22
A2A7A2R7		Same as A1A1A2R68	7-22

TABLE 7-2. OSCILLOSCOPE AN/USM-281D, PARTS LIST(CONT)

Dual Trace Oscilloscope Plug-in Unit AM-6566/U (A2)

Reference Designation	Notes	Name and Description	Figure Number
A2A7A2R8		Same as A2A6R46	7-22
A2A7A2R9		RESISTOR, FIXED, FILM: 1,000 ohms, ±1%, 1/8w; 91637 part no. MFF1-8-1001T1; 30669 part no. 0238-8850	7-22
A2A7A2R10		Same as A2A7A2R9	7-22
A2A7A2R11		RESISTOR, VARIABLE: 10,000 ohms, 30669 part no. 0107-3551	7-22
A2A7A2R12		Not Used	7-22
A2A7A2R13		Same as A2A7A2R9	7-22
A2A7A2R14		RESISTOR, FIXED, FILM: 10,100 ohms, ±1%, 1/8w; 91637 part no. MFF1-8-1012T1; 30669 part no. 0238-8910	7-22
A2A7A2R15		RESISTOR, FIXED, FILM: 111,000 ohms, ±1/2%, 1/8w; 91637 part no. MFF1-8-1113T2; 30669 part no. 0238-9740	7-22
A2A7A2R16		RESISTOR, FIXED, FILM: 333,000 ohms, ±1%, 1/8w; 91637 part no. MFF1-8-3333T1; 30669 part no. 0238-9630	7-22
A2A7A2R17		RESISTOR, FIXED, FILM: 1 megohm, ±1%, 1/8w; 91637 part no. MFF1-8-1004T1; 30669 part no. 0238-8990	7-22
A2A7A2R18		Same as A2A7A2R17	7-22
A2A7A2R19		RESISTOR, FIXED, COMPOSITION: 240,000 ohms, 1/2w; 01121 part no. EB2445; 30669 part no. 0203-1050	7-22
A2A7A2R20		RESISTOR, FIXED, FILM: 1,210 ohms, ±1%, 1/8w; 91637 part no. MFF1-8-1211T1; 30669 part no. 0238-9680	7-22
A2A7A2R21		RESISTOR, THERMAL: 05010 part no. 35TF4; 30669 part no. 0240-3380	7-22
A2A7A2S1		Not Used	7-22
A2A7A2S2		SWITCH, TOGGLE: dpdt; 95146 part no. MST205N; 30669 part no. 0503-2450	7-22
A2A8		Same as A2A7	7-20
A2A8C1		Same as A2A7C1	7-20
A2A8C2 to A2A8C5		Not Used	7-20
A2A8C6		Same as A2A7C6	7-20
A2A8L1		Same as A2A7L1	7-20
A2A8MP1		Same as A2A7MP1	7-20
A2A8MP2		Same as A2A7MP2	7-20
A2A8MP3		Same as A2A7MP3	7-20
A2A8MP4		Same as A2A7MP4	7-20
A2A8MP5 to A2A8MP13		Same as A2A7MP5	7-20
A2A8MP14		Same as A2A7MP14	7-20
A2A8MP15		Same as A2A7MP15	7-20
A2A8MP16		Same as A2A7MP16	7-20
A2A8MP17		Same as A2A7MP17	7-20
A2A8MP18		Same as A2A7MP18	7-20
A2A8R1		Same as A2A7R1	7-20
A2A8S1		Same as A2A7S1	7-20
A2A8A1		Same as A2A7A1	7-21
A2A8A1C1		Same as A1A1A2C22	7-21
A2A8A1C2		Same as A2A7A1C2	7-21
A2A8A1C3		Same as A2A7A1C3	7-21
A2A8A1C4		Same as A2A7A1C4	7-21
A2A8A1C5		Same as A2A7A1C5	7-21
A2A8A1C6		Same as A2A7A1C6	7-21
A2A8A1C7		Same as A1A1A2C22	7-21

TABLE 7-2. OSCILLOSCOPE AN/USM-281D, PARTS LIST(CONT)

Dual Trace Oscilloscope Plug-in Unit AM-6566/U (A2)

Reference Designation	Notes	Name and Description	Figure Number
A2A8A1C8		Not Used	7-21
A2A8A1C9		Same as A1A1A2C22	7-21
A2A8A1C10		Not Used	7-21
A2A8A1C11		Same as A1A1A2C22	7-21
A2A8A1R1		Same as A2A3R20	7-21
A2A8A1R2		Same as A1A1A2R5	7-21
A2A8A1R3		Same as A2A7A1R3	7-21
A2A8A1R4		Same as A2A7A1R4	7-21
A2A8A1R5		Same as A2A7A1R5	7-21
A2A8A1R6		Same as A1A1A3R2	7-21
A2A8A1R7		Same as A2A7A1R7	7-21
A2A8A1R8		Same as A2A7A1R8	7-21
A2A8A1S1		Same as A2A7A1S1	7-21
A2A8A2		Same as A2A7A2	7-22
A2A8A2CR1		Same as A1A1A2CR21	7-22
A2A8A2CR2		Same as A1A1A2CR21	7-22
A2A8A2C1		Same as A1A1A2C1	7-22
A2A8A2C2		Same as A2A7C6	7-22
A2A8A2C3		Same as A2A7C6	7-22
A2A8A2C4		Same as A2A7A2C4	7-22
A2A8A2C5		Not Used	7-22
A2A8A2C6		Same as A2A7A2C6	7-22
A2A8A2C7		Same as A2A7A2C7	7-22
A2A8A2C8		Same as A2A7A2C8	7-22
A2A8A2C9		Same as A2A7A2C9	7-22
A2A8A2C10		Same as A2A7C6	7-22
A2A8A2C11		Same as A2A7A2C11	7-22
A2A8A2C12		Same as A1A1A2C1	7-22
A2A8A2C13		Same as A2A7A1C5	7-22
A2A8A2C14		Same as A2A7A2C14	7-22
A2A8A2C15		Same as A2A7A1C14	7-22
A2A8A2C16		Same as A2A7A2C16	7-22
A2A8A2MP1		RECEPTACLE, ELECTRICAL: 30669 part no. 5102-2730	7-22
A2A8A2MP2		Same as A2A7A2MP1	7-22
A2A8A2MP3		TERMINAL, STANDOFF: 30669 part no. 5101-9150	7-22
A2A8A2MP4		PIN, FORMED: 30669 part no. 5102-2760	7-22
A2A8A2MP5		Same as A2A7A2MP4	7-22
A2A8A2MP6		Same as A2A7A2MP4	7-22
A2A8A2MP7		CONTACT, ELECTRICAL, WIPER: 7344-0001 (Attaching Parts) RIVET: 6300-8450 (3)	7-22
A2A8A2MP8 to A2A8A2MP13		Same as A1A1A2MP39	7-22
A2A8A2MP14		Same as A2A7A2MP14	7-22
A2A8A2Q1		Same as A2A7A2Q1	7-22
A2A8A2R1		Same as A2A7A2R1	7-22
A2A8A2R2		Same as A2A7A2R2	7-22
A2A8A2R3		Same as A1A1A2R35	7-22
A2A8A2R4		Same as A1A1A2R35	7-22
A2A8A2R5		Same as A1A1A2R2	7-22
A2A8A2R6		Same as A1A1A2R68	7-22
A2A8A2R7		Same as A1A1A2R68	7-22

TABLE 7-2. OSCILLOSCOPE AN/USM-281D, PARTS LIST(CONT)

Dual Trace Oscilloscope Plug-in Unit AM-6566/U (A2)

Reference Designation	Notes	Name and Description	Figure Number
A2A8A2R8		Same as A2A6R46	7-22
A2A8A2R9		Same as A2A7A2R9	7-22
A2A8A2R10		Same as A2A7A2R9	7-22
A2A8A2R11		Same as A2A7A2R11	7-22
A2A8A2R12		Not Used	7-22
A2A8A2R13		Same as A2A7A2R9	7-22
A2A8A2R14		Same as A2A7A2R14	7-22
A2A8A2R15		Same as A2A7A2R15	7-22
A2A8A2R16		Same as A2A7A2R16	7-22
A2A8A2R17		Same as A2A7A2R17	7-22
A2A8A2R18		Same as A2A7A2R17	7-22
A2A8A2R19		Same as A2A7A2R19	7-22
A2A8A2R20		Same as A2A7A2R20	7-22
A2A8A2R21		Same as A2A7A2R21	7-22
A2A8A2S1		Not Used	7-22
A2A8A2S2		Same as A2A7A2S2	7-22

TABLE 7-2. OSCILLOSCOPE AN/USM-281D, PARTS LIST(CONT)

Time Base-Delay Oscilloscope Plug-In Unit TD-1086/U(A3)

Reference Designation	Notes	Name and Description	Figure Number
A3		TIME BASE DELAY OSCILLOSCOPE PLUG-IN UNIT: MIL type TD-1086/U, 8901-7891	7-23
A3MP1 to A3MP6		Same as A2MP1	7-23
A3MP7		Same as A1MP3	7-23
A3MP8		KNOB: SWEEP, red; 30669 part number 4501-3042;	7-23
A3MP9		SKIRT ASSEMBLY, SWEEP 30669 part no. 4501-9001	7-23
A3MP10		KNOB, SPRING: 30669 part no. 3005-7081	7-23
A3MP11		Same as A1MP1	7-23
A3MP12		KNOB: Round, red; 30669 part no. 4501-0960	7-23
A3MP13		Same as A1MP2	7-23
A3MP14		KNOB: Modified, black; 30669 part no. 4501-3131	7-23
A3MP15		COVER, PANEL, FUNCTIONS: 30669 part no. 3201-7681 (Attaching Parts): SCREW, MACHINE: Flat hd. no. 4-40 x 3/16 in. lg: 30669 part no. 6009-6560 (6) C(4); K(6); M(4)	7-23
A3MP16		BRACKET, FRONT, TIME SWITCH: 30669 part no. 3507-7541	7-23
A3MP17		CLAMP, CABLE: 30669 part no. 3701-1240	7-23
A3MP18		TERMINAL, LUG: 30669 part no. 5100-3620	7-23
A3MP19 to A3MP21		Same as A3MP18	7-23
A3A1		TIME SWITCH ASSEMBLY: 30669 part no. 8901-7812	7-24
A3A1C1		CAPACITOR, FIXED, MICA DIELECTRIC: 27pf, ±5%, 500vdc; 72136 part no. DM15-270J; 30669 part no. 0317-5130	7-24
A3A1C2		CAPACITOR, FIXED, MICA DIELECTRIC: 240pf, ±5%, 500vdc; 72136 part no. DM15-241J; 30669 part no. 0317-5370	7-24
A3A1C3		CAPACITOR, FIXED, FILM DIELECTRIC: 2,200pf; 56289 part no. 192P22292; 30669 part no. 0328-1280	7-24
A3A1C4		CAPACITOR, FIXED, FILM DIELECTRIC: 10,000pf; 56289 part no. 192P10392; 30669 part no. 0328-1290	7-24
A3A1C5		CAPACITOR, FIXED, FILM DIELECTRIC: 220,000pf; 56289 part no. 192P22492; 30669 part no. 0328-1300	7-24
A3A1C6		CAPACITOR, FIXED, FILM DIELECTRIC: 470,000pf; 56289 part no. 192P4749R8; 30669 part no. 0328-1310	7-24
A3A1C7		Table 7-3; Item No. 4	7-24
A3A1C8		Same as A2A6C9	7-24
A3A1C9		CAPACITOR, FIXED, MICA DIELECTRIC: 4,000pf; 72136 part no. DM19-402F; 30669 part no. 0328-1350	7-24
A3A1C10		CAPACITOR, FIXED, FILM DIELECTRIC: 0.4uf; 72928 part no. 398-032-0-5; 30669 part no. 0328-0869	7-24
A3A1C11		Not Used	7-24
A3A1C12		Not Used	7-24
A3A1C13		Same as A2A6C9	7-24
A3A1C14		Same as A3A1C9	7-24
A3A1C15		Same as A3A1C10	7-24
A3A1MP1		RECEPTACLE, ELECTRICAL: 30669 part no. 5102-2770	7-24
A3A1MP2 to A3A1MP8		Same as A3A1MP1	7-24
A3A1R1		RESISTOR, FIXED, FILM: 180,000 ohms, ±1%, 1/8w; 91637 part no. MFF1-8-1803T1; 30669 part no. 0238-9070	7-24

TABLE 7-2. OSCILLOSCOPE AN/USM-281D, PARTS LIST(CONT)

Time Base-Delay Oscilloscope Plug-in Unit TD-1086/U (A3)

Reference Designation	Notes	Name and Description	Figure Number
A3A1R2		Same as A3A1R1	7-24
A3A1R3		RESISTOR, FIXED, FILM: 540,000 ohms, ±1%, 1/8w; 91637 part no. MFF1-8-5403T1; 30669 part no. 0238-9080	7-24
A3A1R4		RESISTOR, FIXED, FILM: 900,000 ohms, ±1%, 1/8w; 91637 part no. MFF1-8-9003T; 30669 part no. 0238-9090	7-24
A3A1R5		RESISTOR, FIXED, FILM: 1.8 megohm, ±1%, 1/4w; 91637 part no. MFF1-4-1805T; 30669 part no. 0238-9100	7-24
A3A1R6		RESISTOR, FIXED, FILM: 5.4 megohm, ±1%, 1/4w; 03888 part no.	7-24
A3A1R7		RESISTOR, FIXED, FILM: 9 megohm, ±1%, 1/2w; 03888 part no. PME70-9MPORM1; 30669 part no. 0238-8570	7-24
A3A1R8		RESISTOR, FIXED, FILM: 18 megohm, ±1%, 1w; 03888 part no. PME75-18MPORM1-2; 30669 part no. 0238-8580	7-24
A3A1R9		RESISTOR, VARIABLE: 25,000 ohms; 30669 part no. 0107-3461	7-24
A3A1R10		Same as A3A1R9	7-24
A3A1R11		Same as A3A1R1	7-24
A3A1R12		Same as A3A1R1	7-24
A3A1R13		Same as A3A1R3	7-24
A3A1R14		Same as A3A1R4	7-24
A3A1R15		Same as A3A1R5	7-24
A3A1R16		Same as A3A1R6	7-24
A3A1R17		Same as A3A1R7	7-24
A3A1R18		Same as A3A1R8	7-24
A3A1S1		SWITCH, ROTARY: Time; 30669 part no. 0501-8694	7-24
A3A2	10	MAIN SWEEP ASSEMBLY: 30669 part no. 8901-7782 (Attaching Parts) B(5); N(5)	7-25
A3A2CR1	10	Same as A1A1A2CR21	7-25
A3A2CR2	10	Same as A1A1A2CR21	7-25
A3A2CR3	10	Same as A1A1A3CR5	7-25
A3A2CR4 to A3A2CR10	10	Same as A1A1A1A1CR1	7-25
A3A2CR11	10	SEMICONDUCTOR DEVICE, DIODE: Tunnel; 03508 part no. 1N3717; 30669 part no. 2600-8150	7-25
A3A2CR12 to A3A2CR15	10	Same as A1A1A1A1CR1	7-25
A3A2CR16	10	Same as A3A2CR11	7-25
A3A2CR17 to A3A2CR33	10	Same as A1A1A1A1CR1	7-25
A3A2CR34	10	Same as A1A1A3CR5	7-25
A3A2CR35	10	Same as A1A1A3CR5	7-25
A3A2C1	10	CAPACITOR, VARIABLE: 1.5-11. 6pf; 74970 part no. 189-504-5; 30669 part no. 0328-1130	7-25 7-25
A3A2C2	10	Same as A1A1A2C3	7-25
A3A2C3	10	Same as A1A1A2C3	7-25
A3A2C4	10	Same as A3A1C7	7-25
A3A2C5	10	Same as A2A7A2CR16	7-25
A3A2C6	10	CAPACITOR, FIXED, MICA DIELECTRIC: 150pf, ±5%, 500vdc; 72136 part no. DM15-151J; 30669 part no. 0317-5320	7-25

Note 10. See Appendix A for AN/USM-281E configuration of A3A2.

TABLE 7-2. OSCILLOSCOPE AN/USM-281D, PARTS LIST(CONT)

Time Base-Delay Oscilloscope Plug-in Unit TD-1086/U (A?)

Reference Designation	Notes	Name and Description	Figure Number
A3A1C7 to A3A2C9	10	Same as A1A1A2C1	7-25
A3A2C10	10	Same as A3A1C7	7-25
A3A2C11	10	Same as A1A1A2C1	7-25
A3A2C12	10	CAPACITOR, FIXED, MICA DIELECTRIC: 100 pf, ±5%, 500 vdc; 72136 part no. DM15-101J; 30669 part no. 0317-5280	7-25
A3A2C13	10	CAPACITOR, FIXED, CERAMIC DIELECTRIC: 100,000pf, 50vdc; 56289 part no. 5C50A; 30669 part no. 0327-3270	7-25
A3A2C14	10	CAPACITOR, FIXED, MICA DIELECTRIC: 47pf, ±5%, 500vdc; 72136 part no. DM15-470J; 30669 part no. 0317-5190	7-25
A3A2C15	10	Same as A1A1A2C3	7-25
A3A2C16	10	Same as A1A1A2C3	7-25
A3A2C17	10	Same as A3A1C7	7-25
A3A2C18	10	CAPACITOR, FIXED, MICA DIELECTRIC: 560pf, ±5%, 500vdc; 72136 part no. DM15-561J; 30669 part no. 0317-5760	7-25
A3A2C19	10	CAPACITOR, FIXED, MICA DIELECTRIC: 56pf, ±5%, 500vdc; 72136 part no. DM15-560J; 30669 part no. 0317-5220	7-25
A3A2C20	10	Same as A1A1A2C1	7-25
A3A2C21	10	CAPACITOR, FIXED, MICA DIELECTRIC: 10pf, ±5%, 500vdc; 72136 part no. DM15-100J; 30669 part no. 0317-5060	7-25
A3A2C22	10	Same as A1A1A2C16	7-25
A3A2C23	10	CAPACITOR, FIXED, MICA DIELECTRIC: 330pf, ±5%, 500vdc; 72136 part no. DM15-331J; 30669 part no. 0317-5410	7-25
A3A2C24	10	Same as A1A1A2C1	7-25
A3A2C25	10	Table 7-3; Item No. 6	7-25
A3A2C26	10	Same as A1A1A2C13	7-25
A3A2C27	10	Same as A1A1A2C1	7-25
A3A2C28	10	Same as A3A2C25	7-25
A3A2L1 to A3A2L3	10	Same as A1A1A2L1	7-25
A3A2L4	10	Same as A1A1A5L7	7-25
A3A2L5	10	Same as A1A1A5L7	7-25
A3A2L6	10	Not Used	7-25
A3A2L7	10	Same as A1A1A2L1	7-25
A3A2L8	10	Same as A1A1A2L1	7-25
A3A2MP1	10	BOARD, PRINTED CIRCUIT: 30669 part no. 4003-1404	7-25
A3A2MP2	10	RETAINER, CAPACITOR: 74970 part no. 115-189; 30669 part no. 3601-1450	7-25
A3A2MP3	10	TERMINAL, FEEDTHRU: Teflon; 30669 part no. 5102-2730	7-25
A3A2MP4		Same as A3A2MP3	7-25
A3A2MP5	10	PIN, FORMED: 30669 part no. 5102-2760	7-25
A3A2MP6 to A3A2MP9	10	Same as A3A2MP5	7-25
A3A2MP10	10	SOCKET, LEAD: 30669 part no. 5102-2790	7-25
A3A2MP11	10	Same as A3A2MP10	7-25
A3A2MP12	10	TERMINAL, FORMED: 30669 part no. 5102-2800	7-25
A3A2MP13 to A3A2MP51	10	Same as A3A2MP12	7-25

Note 10. See Appendix A for AN/USM-281E configuration of A3A2.

TABLE 7-2. OSCILLOSCOPE AN/USM-281D, PARTS LIST(CONT)

Time Base-Delay Oscilloscope Plug-In Unit TD-1086/U (A3)

Reference Designation	Notes	Name and Description	Figure Number
A3A2MP52 to A3A2MP85	10	Same as A1A1A2MP39	7-25
A3A2Q1	10	TRANSISTOR: Field Effect; 17896 part no. 2N4340: 30669 part no. 2601-0440	7-25
A3A2Q2	10	Same as A1A1A1A1Q1	7-25
A3A2Q3	10	Same as A1A1A1A1Q5	7-25
A3A2Q4	10	TRANSISTOR: NPN; 18714 part no. 2N5179; 30669 part no. 2601-0210	7-25
A3A2Q5	10	Same as A3A2Q4	7-25
A3A2Q6	10	TRANSISTOR: PNP; 07263 part no. 2N4313; 30669 part no. 2601-0130	7-25
A3A2Q7	10	Same as A3A2Q6	7-25
A3A2Q8	10	Same as A3A2Q4	7-25
A3A2Q9	10	Same as A1A2A6A1Q4	7-25
A3A2Q10	10	TRANSISTOR: PNP; 07263 part no. 2N4250; 30669 part no. 2601-0140	7-25
A3A2Q11	10	TRANSISTOR: NPN; 04713 part no. 2N4410; 30669 part no. 2601-0280	7-25
A3A2Q12	10	Same as A2A3Q3	7-25
A3A2Q13	10	TRANSISTOR: PNP; 07263 part no. 2N4917; 30669 part no. 2601-0460	7-25
A3A2Q14	10	TRANSISTOR: PNP; 04713 part no. 2N964; 30669 part no. 2601-0270	7-25
A3A2Q15	10	Same as A1A2A6A1Q4	7-25
A3A2Q16	10	Same as A1A2A6A1Q4	7-25
A3A2Q17	10	Same as A1A1A3Q1	7-25
A3A2Q18	10	Same as A3A2Q11	7-25
A3A2Q19	10	Same as A3A2Q1	7-25
A3A2Q20	10	Same as A1A1A3Q1	7-25
A3A2Q21	10	Same as A3A2Q10	7-25
A3A2Q22	10	Same as A3A2Q10	7-25
A3A2R1	10	RESISTOR, VARIABLE: 500 ohms, ±10%; 32997 part no. 3345P1-501; 30669 part no. 0109-6330	7-25
A3A2R2	10	RESISTOR, VARIABLE: 5,000 ohms, ±10%; 32997 part no. 3345P1-502 30669 part no. 0109-6340	7-25
A3A2R3	10	RESISTOR, VARIABLE; 20,000ohms,±10%; 32997 part no. 3345P1-203; 30669 part no. 0109-6350	7-25
A3A2R4	10	Same as A1A1A2R5	7-25
A3A2R5	10	Same as A1A1R3	7-25
A3A2R6	10	Same as A2A7A2R19	7-25
A3A2R7	10	Same as A1A1A2R68	7-25
A3A2R8	10	Same as A1A1A3R14	7-25
A3A2R9	10	Table 7-3; Item No. 20	7-25
A3A2R10	10	Same as A1A1A1A1R12	7-25
A3A2R11	10	Same as A1A1A5R33	7-25
A3A2A12	10	RESISTOR, FIXED, COMPOSITION: 360 ohms, 1/4w; 01121 part no. CB3615; 30669 part no. 0235-4510	7-25
A3A2R13	10	Same as A1A1A2R23	7-25
A3A2R14	10	Same as A1A1A1A1R9	7-25
A3A2R15	10	Same as A1A1A2R32	7-25
A3A2R16	10	Same as A1A1A2R68	7-25
A3A2R17	10	Same as A1A1A1A1R19	7-25
A3A2R18	10	RESISTOR, FIXED, COMPOSITION:39,000 ohms, 1/4w;01121 part no. CB3935 30669 part no. 0235-4990	7-25
A3A2R19	10	Same as A1A1A2R23	7-25

Note 10. See Appendix A for AN/USM-281E configuration of A3A2.

TABLE 7-2. OSCILLOSCOPE AN/USM-281D, PARTS LIST(CONT)

Time Base-Delay Oscilloscope Plug-in Unit TD-1086/U (A3)

Reference Designation	Notes	Name and Description	Figure Number
A3A2R20	10	RESISTOR, FIXED, COMPOSITION: 270 ohms, 1/4w; 01121 part no. CB2715; 30669 part no. 0235-4480	7-25
A3A2R21	10	Same as A1A2A6A1R7	7-25
A3A2R22	10	Same as A1A1A5R33	7-25
A3A2R23	10	RESISTOR, FIXED, COMPOSITION: 120,000 ohms, 1/4w; 01121 part no. CB1245; 30669 part no. 0235-5110	7-25
A3A2R24	10	Same as A3A2R23	7-25
A3A2R25	10	Same as A1A1A5R33	7-25
A3A2R26	10	RESISTOR, FIXED, COMPOSITION: 27,000 ohms, 1/2w; 01121 part no. EB2735; 30669 part no. 0203-0820	7-25
A3A2R27	10	Same as A1A1A2R68	7-25
A3A2R28	10	Same as A1A1A2R68	7-25
A3A2R29	10	Same as A1A1A1A1R21	7-25
A3A2R30	10	Same as A1A1A2R1	7-25
A3A2R31	10	Not Used	7-25
A3A2R32	10	RESISTOR, FIXED, COMPOSITION: 68 ohms, 1/4w; 01121 part no. CB6805; 30669 part no. 0235-4340	7-25
A3A2R33	10	Same as A1A1A1A1R1	7-25
A3A2R34	10	Same as A1A1A2R68	7-25
A3A2R35	10	RESISTOR, FIXED, COMPOSITION: 43,000 ohms, 1/2w; 01121 part no. EB4335; 30669 part no. 0203-0870	7-25
A3A2R36	10	Same as A1A1A2R68	7-25
A3A2R37	10	RESISTOR, FIXED, COMPOSITION: 6,200 ohms, 1/4w; 01121 part no. CB6225; 30669 part no. 0235-4800	7-25
A3A2R38	10	Same as A1A1A1A1R17	7-25
A3A2R39	10	Table 7-3; Item No. 18	7-25
A3A2R40	10	Same as A3A2R37	7-25
A3A2R41	10	Same as A1A1A2R3	7-25
A3A2R42	10	Same as A1A1A1A1R9	7-25
A3A2R43	10	Same as A1A2A6A1R9	7-25
A3A2R44	10	Not Used	7-25
A3A2R45	10	Same as A1A1A1A1R24	7-25
A3A2R46	10	RESISTOR, FIXED, COMPOSITION: 4,300 ohms, 1/4w; 01121 part no. CB4325; 30669 part no. 0235-4760	7-25
A3A2R47	10	Same as A1A1A5R6	7-25
A3A2R48	10	Same as A1A1A2R44	7-25
A3A2R49	10	Same as A1A1A3R20	7-25
A3A2R50	10	RESISTOR, FIXED, COMPOSITION: 1,300 ohms, 1/4w; 01121 part no. CB1325; 30669 part no. 0237-6280	7-25
A3A2R51	10	RESISTOR, FIXED, COMPOSITION: 750 ohms, 1/2w; 01121 part no. EB7515; 30669 part no. 0203-0450	7-25
A3A2R52	10	Not Used	7-25
A3A2R53	10	Table 7-3; Item No. 19	7-25
A3A2R54	10	Same as A1A1A5R6	7-25
A3A2R55	10	RESISTOR, FIXED, COMPOSITION: 330 ohms, 1/4w; 01121 part no. CB3315; 30669 part no. 0235-4500	7-25
A3A2R56	10	Same as A1A1A2R35	7-25
A3A2R57	10	Same as A1A1A2R44	7-25
A3A2R58	10	Same as A1A1A3R14	7-25
A3A2R59	10	Same as A1A1A2R68	7-25
A3A2R60	10	Same as A2A6R43	7-25

Note 10. See Appendix A for AN/USM-281E configuration of A3A2.

TABLE 7-2. OSCILLOSCOPE AN/USM-281D, PARTS LIST(CONT)

Time Base-Delay Oscilloscope Plug-in Unit TD-1086/U (A3)

Reference Designation	Notes	Name and Description	Figure Number
A3A2R61	10	RESISTOR, FIXED, FILM: 3,750 ohms, ±1%, 1/8w; 91637 part no. MFF1-8-3571T1; 30669 part no. 0238-8890	7-25
A3A2R62	10	Same as A3A2R37	7-25
A3A2R63	10	RESISTOR, FIXED, COMPOSITION: 5,600 ohms, 1/4w; 01121 part no. CB5625; 30669 part no. 0235-4790	7-25
A3A2R64	10	Same as A1A1A2R68	7-25
A3A2R65	10	RESISTOR, FIXED, COMPOSITION: 22,000 ohms, 1w; 01121 part no. GB2235; 30669 part no. 0203-3800	7-25
A3A2R66	10	Same as A1A1A2R35	7-25
A3A2R67	10	Same as A1A1A2R68	7-25
A3A2R68	10	Same as A3A2R39	7-25
A3A2R69	10	Same as A1A1A2R68	7-25
A3A2R70	10	RESISTOR, FIXED, COMPOSITION: 820,000 ohms, 1/4w; 01121 part no. CB8245; 30669 part no. 0235-5310	7-25
A3A2R71	10	RESISTOR, FIXED, COMPOSITION: 1.5 megohm, 1/4w; 01121 part no. CB1555; 30669 part no. 0235-5370	7-25
A3A2R72	10	Same as A1A1A1A1R9	7-25
A3A2R73	10	Not Used	7-25
A3A2R74	10	Not Used	7-25
A3A2R75	10	Same as A1A1A5R42	7-25
A3A2R76	10	Same as A1A2A6A1R7	7-25
A3A2R77	10	Same as A1A1A5R33	7-52
A3A2R78	10	Same as A3A2R9	7-25
A3A2R79	10	Same as A1A1A1R19	7-25
A3A2R80	10	Same as A1A1A2R35	7-25
A3A2R81	10	Same as A1A1A5R6	7-25
A3A2R82	10	Same as A1A1A2R35	7-25
A3A2R83	10	RESISTOR, FIXED, COMPOSITION: 27,000 ohms, 1/4w; 01121 part no. CB2705; 30669 part no. 0235-4950	7-25
A3A2R84	10	RESISTOR, FIXED, COMPOSITION: 430,000 ohms, 1/4w; 01121 part no. CB4345; 30669 part no. 0235-5240	7-52
A3A2R85	10	RESISTOR, FIXED, COMPOSITION: 470,000 ohms, 1/4w; 01121 part no. CB4745, 30669 part no. 0235-5250	7-25
A3A2R86	10	Same as A3A2R9	7-25
A3A2R87	10	Same as A3A2R39	7-25
A3A2R88	10	Same as A3A2R39	7-25
A3A2R89	10	Same as A3A2R85	7-25
A3A2R90	10	Same as A1A1A3R15	7-25
A3A2R91	10	Same as A3A2R9	7-25
A3A2R92	10	Same as A1A1A3R20	7-25
A3A2T1	10	Same as A2A6T1	7-25
A3A2XQ1 to A3A2XQ18	10	Same as A1A1A1A1XQ1	7-25
A3A2XQ19	10	Not Used	7-25
A3A2XQ20 to A3A2XQ22	10	Same as A1A1A1A1XQ1	7-25
A3A2Z1	10	INDUCTOR ASSEMBLY: 30669 part no. 2101-9552	
A3A3		CABLE ASSEMBLY, TIME BASE: 30669 part no. 5028-9971	7-23
A3A4		COAXIAL CABLE ASSEMBLY: 30669 part no. 5028-9961	7-23

Note 10. See Appendix A for AN/USM-281E configuration of A3A2.

TABLE 7-2. OSCILLOSCOPE AN/USM-281D, PARTS LIST(CONT)

Time Base-Delay Oscilloscope Plug-In Unit TD-1086/U(A3)

Reference Designation	Notes	Name and Description	Figure Number
A3A5	11	DELAYED SWEEP ASSEMBLY: 30669 part no. 8901-7783 Attaching Parts: B(5); N(5)	7-26
A3A5CR1	11	Same as A1A1A2CR21	7-26
A3A5CR2	11	Same as A1A1A2CR21	7-26
A3A5CR3	11	Same as A1A1A3CR5	7-26
A3A5CR4 to A3A5CR7	11	Same as A1A1A1A1CR1	7-26
A3A5CR8	11	Same as A3A2CR11	7-26
A3A5CR9	11	Same as A1A1A1A1CR1	7-26
A3A5CR10	11	Same as A1A1A1A1CR1	7-26
A3A5CR11	11	Same as A3A2CR11	7-26
A3A5CR12 to A3A5CR17	11	Same as A1A1A1A1CR1	7-26
A3A5CR18	11	Same as A3A2CR11	7-26
A3A5CR19 to A3A5CR31	11	Same as A1A1A1A1CR1	7-26
A3A5C1	11	Same as A2A7A2C16	7-26
A3A5C2	11	Same as A3A2C6	7-26
A3A5C3	11	Same as A1A1A2C1	7-26
A3A5C4	11	Same as A1A1A2C1	7-27
A3A5C5	11	Same as A3A2C13	7-26
A3A5C6	11	Same as A2A3C15	7-26
A3A5C7	11	Same as A1A1A2C1	7-26
A3A5C8	11	Same as A1A1A2C3	7-26
A3A5C9	11	Same as A1A1A2C3	7-26
A3A5C10	11	Same as A3A1C7	7-26
A3A5C11	11	CAPACITOR, FIXED, ELECTROLYTIC: 90uf, 15vdc; 56289 part no. 30D906G015CCA; 30669 part no. 0328-1260	7-26
A3A5C12	11	Same as A1A1A2C1	7-26
A3A5C13	11	Same as A3A2C25	7-26
A3A4C14	11	Same as A3A2C13	7-26
A3A5C15	11	CAPACITOR, FIXED, FILM ELECTRIC: 22,000pf, 100 vdc; 56289 part no. 225P22391WD; 30669 part no. 0328-1390	7-26
A3A5C16 to A3A5C18	11	Same as A1A1A2C1	7-26
A3A5C19	11	Same as A3A2C25	7-26
A3A5C20	11	Same as A1A1A2C1	7-26
A3A5C21	11	Same as A1A1A2C1	7-26
A3A5C22	11	Same as A3A2C21	7-27
A3A5C23	11	Same as A3A2C18	7-26
A3A5C24	11	Same as A1A1A2C3	7-26
A3A5C25	11	Same as A1A1A2C3	7-26
A3A5C26	11	Same as A3A1C7	7-26
A3A5C27	11	CAPACITOR, FIXED, MICA DIELECTRIC: 22pf, +5%, 500vdc, 72136 part no. DM15-220J; 30669 part no. 0317-5110	7-26
A3A5C28	11	Same as A3A2C13	7-26
A3A5C29	11	Same as A3A2C19	7-26
A3A5C30	11	Same as A3A2C23	7-26

Note 11. See Appendix A for AN/USM-281E configuration of A3A5.

TABLE 7-2. OSCILLOSCOPE AN/USM-281D, PARTS LIST(CONT)

Time Base-Delay Oscilloscope Plug-In Unit TD-1086/U (A3)

Reference Designation	Notes	Name and Description	Figure Number
A3A5C31	11	Same as A1A1A2C1	7-26
A3A5C32	11	Same as A3A2C1	7-26
A3A5C33	11	Same as A3A2C25	7-26
A3A5L1	11	Same as A1A1A2L1	7-26
A3A5L2	11	Same as A1A1A2L1	7-26
A3A5L3	11	Same as A1A1A5L7	7-26
A3A5L4	11	Same as A1A1A5L7	7-26
A3A5L5	11	Not Used	7-26
A3A5L6	11	Same as A1A1A2L1	7-26
A3A5L7	11	Same as A1A1A2L1	7-26
A3A5L8	11	Same as A1A1A5L3	7-26
A3A5MP1	11	BOARD, PRINTED CIRCUIT: 30669 part no. 4003-1415	7-26
A3A5MP2	11	RETAINER, CAPACITOR: 74970 part no. 115-189 30669 part no. 3601-1450	7-26
A3A5MP3	11	TERMINAL, FEEDTHRU: Teflon; 30669 part no. 5102-2730	7-26
A3A5MP4		Same as A3A5MP3	7-26
A3A5MP5	11	PIN, FORMED: 30669 part no. 5102-2760	7-26
A3A5MP6 to A3A5MP8	11	Same as A3A5MP5	7-26
A3A5MP9	11	SOCKET, LEAD: 30669 part no. 5102-2790	7-26
A3A5MP10	11	Same as A3A5MP9	7-26
A3A5MP11	11	TERMINAL, FORMED: 30669 part no. 5102-2800	7-26
A3A5MP12 to A3A5MP48	11	Same as A3A5MP11	7-26
A3A5MP49	11	TERMINAL, FORMED: 30669 part no. 5102-2880	7-26
A3A5MP50	11	Same as A3A5MP49	7-26
A3A5MP51 to A3A5MP74	11	Same as A1A1A2MP39	7-26
A3A5Q1	11	Same as A3A2Q1	7-26
A3A5Q2	11	Same as A1A1A1A1Q1	7-26
A3A5Q3	11	Same as A1A1A1A1Q5	7-26
A3A5Q4	11	Same as A3A2Q4	7-26
A3A5Q5	11	Same as A3A2Q4	7-26
A3A5Q6	11	Same as A3A2Q6	7-26
A3A5Q7	11	TRANSISTOR: NPN, Dual; 56289 part no. TD101; 30669 part no. 2601-0390	7-26 7-26
A3A5Q8	11	Same as A1A1A3Q1	7-26
A3A5Q9	11	Same as A1A1A1A1Q1	7-26
A3A5Q10	11	Same as A1A2A6A1Q4	7-26
A3A5Q11	11	Same as A1A2A6A1Q4	7-26
A3A5Q12	11	Same as A3A2Q14	7-26
A3A5Q13	11	Table 7-3, Item No. 50	7-26
A3A5Q14	11	Same as A3A2Q13	7-26
A3A5Q15	11	Same as A3A2Q10	7-26
A3A5Q16	11	Same as A3A2Q10	7-26
A3A5Q17	11	Same as A3A2Q1	7-26
A3A5Q18	11	Same as A1A1A3Q1	7-26
A3A5Q19	11	Same as A3A2Q11	7-26

Note 11. See Appendix A for AN/USM-281E configuration of A3A5.

TABLE 7-2. OSCILLOSCOPE AN/USM-281D, PARTS LIST(CONT)

Time Base-Delay Oscilloscope Plug-In Unit TD-1086/U (A3)

Reference Designation	Notes	Name and Description	Figure Number
A3A5Q20	11	Same as A1A1A2Q14	7-26
A3A5R1	11	Same as A1A1R3	7-26
A3A5R2	11	Same as A2A7A2R19	7-26
A3A5R3	11	Same as A1A1A2R68	7-26
A3A5R4	11	Same as A1A1A3R14	7-26
A3A5R5	11	Same as A3A2R9	7-26
A3A5R6	11	RESISTOR, VARIABLE: 5,000 ohms, 1/2 w; 32997 part no.3345P1-501; 30669 part no. 0109-6330	7-26
A3A5R7	11	Same as A1A1A1A1R12	7-26
A3A5R8	11	Same as A1A1A5R33	7-26
A3A5R9	11	Same as A1A1A2R32	7-26
A3A5R10	11	Not Used	7-26
A3A5R11	11	Same as A1A1A1A1R21	7-26
A3A5R12	11	Same as A1A1A2R1	7-26
A3A5R13	11	Not Used	7-26
A3A5R14	11	Same as A3A2R32	7-26
A3A5R15	11	Same as A1A1A1A1R1	7-26
A3A5R16	11	Same as A1A1A2R68	7-26
A3A5R17	11	Same as A1A1A3R14	7-26
A3A5R18	11	Same as A1A1A2R68	7-26
A3A5R19	11	Same as A3A2R37	7-26
A3A5R20	11	Same as A1A1A2R68	7-26
A3A5R21	11	Not Used	7-26
A3A5R22	11	Same as A1A1A1A1R19	7-26
A3A5R23	11	Same as A1A1A2R54	7-26
A3A5R24	11	Same as A3A5R6	7-26
A3A5R25	11	Same as A3A5R6	7-26
A3A5R26	11	Same as A1A1A1A1R19	7-26
A3A5R27	11	Same as A3A2R37	7-26
A3A5R28	11	Same as A1A1A2R68	7-26
A3A5R29	11	RESISTOR, FIXED, COMPOSITION: 7500 ohms, 1/2w; 01121 part no. EB7525; 30669 part no. 0203-0690	7-26
A3A5R30	11	Same as A1A1A2R35	7-26
A3A5R31	11	Same as A1A1A5R17	7-26
A3A5R32	11	Same as A1A1A2R5	7-26
A3A5R33	11	Same as A2A6R13	7-26
A3A5R34	11	Same as A1A1A2R54	7-26
A3A5R35	11	Same as A1A1A2R68	7-26
A3A5R36	11	Same as A1A1A2R44	7-26
A3A5R37	11	Same as A1A2A6A1R7	7-26
A3A5R38	11	Same as A1A2A6A1R9	7-26
A3A5R39	11	Same as A1A1A5R6	7-26
A3A5R40	11	Same as A1A1A2R35	7-26
A3A5R41	11	Same as A1A1A2R35	7-26
A3A5R42	11	Same as A1A1A5R33	7-26
A3A5R43	11	Same as A1A2A6A1R7	7-26
A3A5R44	11	Same as A1A1A5R42	7-26
A3A5R45	11	Same as A3A2R9	7-26
A3A5R46	11	Same as A1A1R3	7-26
A3A5R47	11	Same as A1A1A1A1R19	7-26
A3A5R48	11	Same as A1A2A6A1R9	7-26

Note 11. See Appendix A for AN/USM-281E configuration of A3A5.

TABLE 7-2. OSCILLOSCOPE AN/USM-281D, PARTS LIST(CONT)

Time Base-Delay Oscilloscope Plug-In Unit TD-1086/U(A3)

Reference Designation	Notes	Name and Description	Figure Number
A3A5R49	11	Not Used	7-26
A3A5R50	11	Same as A1A1A2R3	7-26
A3A5R51	11	Same as A1A1A2R32	7-26
A3A5R52	11	Same as A1A1A2R35	7-26
A3A5R53	11	Same as A1A1A3R14	7-26
A3A5R54	11	Same as A3A2R55	7-26
A3A5R55	11	Same as A1A1A5R6	7-26
A3A5R56	11	Not Used	7-26
A3A5R57	11	Same as A3A2R50	7-26
A3A5R58	11	Same as A1A1A1A1R24	7-26
A3A5R59	11	Same as A3A2R50	7-26
A3A5R60	11	Same as A3A2R51	7-26
A3A5R61	11	Same as A1A1A2R44	7-26
A3A5R62	11	Same as A1A1A2R23	7-26
A3A5R63	11	Same as A1A1A5R6	7-26
A3A5R64	11	Same as A3A2R46	7-26
A3A5R65	11	Same as A1A1A1A1R24	7-26
A3A5R66	11	Same as A1A1A2R68	7-26
A3A5R67	11	Same as A1A1A2R35	7-26
A3A5R68	11	Same as A1A1A2R68	7-26
A3A5R69	11	Same as A3A2R65	7-26
A3A5R70	11	Same as A1A1A2R44	7-26
A3A5R71	11	Same as A1A1A2R68	7-26
A3A5R72	11	Same as A1A1A3R14	7-26
A3A5R73	11	Same as A2A6R43	7-26
A3A5R74	11	Same as A3A2R61	7-26
A3A5R75	11	Same as A3A2R37	7-26
A3A5R76	11	Same as A3A2R3	7-26
A3A5R77	11	Same as A3A2R63	7-26
A3A5R78	11	Same as A1A1A2R68	7-26
A3A5R79	11	Same as A1A1A2R5	7-26
A3A5R80	11	Same as A1A1A2R5	7-26
A3A5R81	11	RESISTOR, FIXED, COMPOSITION: 13,000 ohms, 1w; 01121 part no. GB1335; 30669 part no. 0203-3750	7-26
A3A5R82	11	RESISTOR, VARIABLE: 5,000 ohms; 32997 part no. 3329H1-502; 30669 part no. 0109-6450	7-26
A3A5R83	11	Same as A1A1A5R6	7-26
A3A5R84	11	Same as A3A2R39	7-26
A3A5R85	11	Same as A2A6R40	7-26
A3A5R86	11	Same as A1A1A1A1R9	7-26
A3A5R87	11	Same as A1A1A2R23	7-26
A3A5T1	11	Same as A2A6T1	7-26
A3A5XQ1 to A3A5XQ6	11	Same as A1A1A1A1XQ1	7-26
A3A5XQ7a	11	Same as A1A1A1A1XQ1	7-26
A3A5XQ7b	11	Same as A1A1A1A1XQ1	7-26
A3A5XQ8 to A3A5XQ16	11	Same as A1A1A1A1XQ1	7-26
A3A5XQ17	11	Not Used	7-26

Note 11. See Appendix A for AN/USM-281E configuration of A3A5.

TABLE 7-2. OSCILLOSCOPE AN/USM-281D, PARTS LIST(CONT)

Time Base-Delay Oscilloscope Plug-In Unit TD-1086/U (A3)

Reference Designation	Notes	Name and Description	Figure Number
A3A5XQ18 to A3A5XQ20	11	Same as A1A1A1A1XQ1	7-26
A3A6	12	TIME BASE FUNCTION ASSEMBLY: 30669 part no. 8901-7890	7-27
A3A6C1	12	CAPACITOR, FIXED, FILM DIELECTRIC: 1 uf; 72928 part no. 398-033-0-5; 30669 part no. 0328-0850	7-27
A3A6C2 to A3A6C4	12	Same as A3A6C1	7-27
A3A6DS1	12	LAMP; Part of A3A6S2	7-27
A3A6J1	12	Same as A1A1A1J1	7-27
A3A6J2	12	Same as A1A1A1J1	7-27
A3A6J3	12	CONNECTOR, RECEPTACLE, ELECTRICAL: 24 pin, male contacts; 00779 part no. 26-159-24; 30669 part no. 0906-0230; (Attaching Parts)D(2); NUT, HEXAGON, SELFLOCKING No. 4-40 30669 part no. 6102-8530 (2)	7-27
A3A6J4	12	Same as A2A5J4	7-27
A3A6MP1	12	TERMINAL, LUG; 30669 part no. 5100-2310 (Attaching Parts) C (1)	7-27
A3A6MP2	12	TERMINAL, STANDOFF: Threaded No. 4; 30669 part no. 5102-2850	7-27
A3A6MP3	12	Same as A3A6MP2	7-27
A3A6MP4	12	TERMINAL, LUG: 30669 part no. 5101-3720	7-27
A3A6MP5	12	Same as A3A6MP4	7-27
A3A6MP6	12	FASTENER, SNAP SLIDE: 6401-8220	7-27
A3A6MP7	12	Same as A3A6MP6	7-27
A3A6MP8	12	TERMINAL, STUD: 30669 part no. 4101-1400	7-27
A3A6MP9 to A3A6MP11	12	Same as A3A6MP8	7-27
A3A6MP12	12	TERMINAL, LUG: Ground; 30669 part no. 5100-9010	7-27
A3A6MP13	12	BRACKET, CONNECTOR: 30669 part no. 3506-2593; (Attaching Parts) D(4); M(4)	7-27
A3A6MP14	12	SUPPORT, VERTICAL; Right side; 30669 part no. 3103–5658	7-27
A3A6MP15	12	PANEL, FRONT; Function; 30669 part no. 3201-7671	7-27
A3A6R1A,B,C	12	RESISTOR, VARIABLE: 30669 part no. 0107-3472; (Attaching Parts) NUT, HEXAGON: no. 1/4-32 NEF 2A; 30669 part no. 6103-4510 (1); P(1)	7-27
A3A6R2	12	Same as A1A1A6R4	7-27
A3A6S1	12	SWITCH, TOGGLE: spdt; 95146 part no. MST105E; 30669 part no. 0503-2730	7-27
A3A6S2	12	SWITCH, PUSH: spst, contains lamp DS1; 07137 part no. MBLA42-000A9ATT; 30669 part no. 0503-2800	7-27
A3A6S3	12	SWITCH, ROTARY: Horizontal Mode; 30669 part no. 0501-8633	7-27
A3A6A1	12	SWITCH ASSEMBLY, TRIGGER: 30669 part no. 8901-7615 Attaching Parts: SPACER, THREADED: No. 4; 30669 part no. 4301-4421 (4); WASHER, LOCK: Split, No. 4; 30669 part no. 6210-0010	7-28
A3A6A1C1	12	CAPACITOR, FIXED, COMPOSITION: 5.6pf, ±5%; 84171 part no. JM5-32PORM5PCT; 30669 part no. 0313-3680	7-28
A3A6A1C2	12	CAPACITOR, FIXED, COMPOSITION: 10 pf, ±10%; 29604 part no. GA10PFPORM10PCT;30669 part no. 0313-3960	7-28

Note 12. See Appendix A for AN/USM-281E configuration of A3A6.

Note 11. See Appendix A for AN/USM-281E configuration of A3A5.

TABLE 7-2. OSCILLOSCOPE AN/USM-281D, PARTS LIST(CONT)

Time Base-Delay Oscilloscope Plug-In Unit TD-1086/U

Reference Designation	Notes	Name and Description	Figure Number
A3A6A1C3	12	CAPACITOR, FIXED, MICA DIELECTRIC: 37pf, ±5%, 500 vdc; 72136 part no. DM15-370J; 30669 part no. 0317-5160	7-28
A3A6A1C4	12	Same as A3A2C25	7-28
A3A6A1C5	12	CAPACITOR, FIXED, FILM: 2,700 pf, ±10%, 84048 part no. 663XF272; 30669 part no. 0328-3160	7-28
A3A6A1MP1	12	TERMINAL, LUG: 30669 part no. 5101-9010	7-28
A3A6A1MP2	12	Same as A3A6A1MP1	7-28
A3A6A1MP3	12	Same as A3A6A1MP1	7-28
A3A6A1R1	12	Same as A1A1A2R5	7-82
A3A6A1R2	12	Same as A3A2R39	7-28
A3A6A1R3	12	RESISTOR, FIXED, COMPOSITION: 110,000 ohms, 1/4w; 01121 part no. CB1145; 30669 part no. 0235-5100	7-28
A3A6A1R4	12	RESISTOR, FIXED, COMPOSITION: 910,000 ohms, 1/4w; 01121 part no. CB9145; 30669 part no. 0235-5320	7-28
A3A6A1S1A	12	SWITCH, LEVER: 3 SECTION: 30669 part no. 0502-8001	7-28
A3A6A1S1B	12	Part of A3A6A1S1A	7-28
A3A6A1S1C	12	Part of A3A6A1S1A	7-28
A3A6A2	12	Same as A3A6A1	7-28
A3A6A2C1	12	Same as A3A6A1C1	7-28
A3A6A2C2	12	Same as A3A6A1C2	7-28
A3A6A2C3	12	Same as A3A6A1C3	7-28
A3A6A2C4	12	Same as A3A2C25	7-28
A3A6A2C5	12	Same as A3A6A1C5	7-28
A3A6A1MP1	12	TERMINAL, LUG: 30669 part no. 5101-9010	7-28
A3A6A2MP2	12	Same as A3A6A2MP1	7-28
A3A6A2MP3	12	Same as A3A6A2MP1	7-28
A3A6A2R1	12	Same as A1A1A2R5	7-28
A3A6A2R2	12	Same as A3A2R39	7-28
A3A6A2R3	12	Same as A3A6A1R3	7-28
A3A6A2R4	12	Same as A3A6A1R4	7-28
A3A6A2S1A	12	Same as A3A6A1S1A	7-28
A3A6A2S1B	12	Part of A3A6A2S1A	7-28
A3A6A2S1C	12	Part of A3A6A2S1A	7-28

Note 12. See Appendix A for AN/USM-281E configuration of A3A6.

TABLE 7-2. OSCILLOSCOPE AN/USM-281D, PARTS LIST

Front Cover Assembly (A4)

Reference Designation	Notes	Name and Description	Figure Number
A4	13	COVER ASSEMBLY, FRONT: Consists of accessories MP1 through MP28: 30669 part no. 8700-2551	7-29
A4MP1	13	PROBE: 30669 part no. 8901-7902	7-29
A4MP2	13	Same as A4MP1	7-29
A4MP3	13	ADAPTER, CONNECTOR: MIL Type UG-255/U part no. 0906-0320	7-29
A4MP4	13	Same as A4MP3	7-29
A4MP5	13	ADAPTER, CONNECTOR: MIL Type UG-273/U part no. 0906-0310	7-29
A4MP6	13	Same as A4MP5	7-29
A4MP7	13	ADAPTER, CONNECTOR: MIL Type UG-274/U part no. 0906-0330	7-29
A4MP8	13	Same as A4MP7	7-29
A4MP9	13	CABLE ASSEMBLY: 30669 part no. 5028-9669	7-29
A4MP10	13	Same as A4MP9	7-29
A4MP11	13	POST, BINDING: MIL Type UG-1035/U part no. 0906-0300	7-29
A4MP12	13	Same as A4MP11	7-29
A4MP13	13	PLUG, TIP BANANA: 78947 part no. 152239; 30669 part no. 0905-9850	7-29
A4MP14	13	Same as A4MP13	7-29
A4MP15	13	SPRING, JACK: 30669 part no. 3005-7412	7-29
A4MP16	13	Same as A4MP15	7-29
A4MP17	13	Table 7-3; Item No. 41	7-29
A4MP18 to A4MP22	13	Same as A4MP17	7-29
A4MP23	13	CLIP, ALLIGATOR: 30669 part no. 3600-6621	7-29
A4MP24	13	Same as A4MP23	7-29
A4MP25	13	HOOK, TIP: part of A4MP1; 30669 part no 3005-9036	7-29
A4MP26	13	Same as A4MP25	7-29
A4MP27	13	PINCHER, TIP: part of A4MP1; 30669 part no. 3005-9038	7-29
A4MP28	13	Same as A4MP27	7-29
A4MP29	13	PIN, TIP: part of A4MP1; 30669 part no. 3005-9039	
A4MP30	13	Same as A4MP29	7-29
A4MP31	13	GROUND CABLE ASSEMBLY: part of A4MP1; 30669 part no. 5028-9782	7-29
A4MP32	13	Same as A4MP31	7-29
A4MP33	13	STANDOFF: 30669 part no. 3005-2400	7-29
A4MP34	13	GROMMET: 30669 part no. 3802-0430	7-29
A4MP35	13	PLUNGER: 30669 part no. 3802-0440	7-29
A4MP36	13	DOOR, COVER: 30669 part no. 3507-7729 (Attaching Parts) E (2)	7-29
A4MP37	13	DOOR, BACKING: 30669 part no. 6803-2506	7-29
A4MP38	13	BRACKET, COVER: 30669 part no. 3507-7728 (Attaching Parts) RIVET: 30669 part no. 6303-1050 (2); RIVET 30669 part no. 30669 part no. 6303-1120 (2)	7-29
A4MP39	13	Same as A1A3MP14	7-29
A4MP40 to A4MP42	13	Same as A4MP39	7-29

Note 13. See Appendix A for AN/USM-281E configuration of A4.

TABLE 7-2. OSCILLOSCOPE AN/USM-281D, PARTS LIST

Front Cover Assembly (A4)

Reference Designation	Notes	Name and Description	Figure Number
A4MP43	13	EXTRUSION, RUBBER: 30669 part no. 7000-3631	7-29
A4MP44	13	Same as A4MP29	7-29
A4MP45	13	INSERT, COVER: Top. 30669 part no. 6803-2504	7-29
A4MP46	13	INSERT, COVER: Bottom: 30669 part no. 6803-2505	7-29
A4MP47	13	LINER, FRONT COVER: 30669 part no. 6803-2507	7-29
A4MP48	13	COVER, FRONT: 30669 part no. 4202-6561	7-29

Note 13. See Appendix A for AN/USM-281E configuration of A4.

TABLE 7-3. LIST OF COMMON ITEM DESCRIPTIONS

ITEM NO. (Note 1)	DESCRIPTION
1	BEAD FERRITE: 02114 part no. 56-59065-3B; 30669 part no. 2110-1560
2	CAPACITOR, FIXED, CERAMIC DIELECTRIC: 20,000 pf, 150 vdc; 71590 part no. DDM203; 30669 part no. 0319-1050
3	CAPACITOR, FIXED, CERAMIC DIELECTRIC: 1,000 pf; 18796 part no. 861-000Z5U0102M; 30669 part no. 0328-1410
4	CAPACITOR, FIXED, ELECTROLYTIC: 3 uf, 150 vdc; 56289 part no. 30D305G150CG2; 30669 part no. 0328-0770
5	CAPACITOR, FIXED, ELECTROLYTIC: 8 uf, 25 vdc; 56289 part no. 30D805G025BA4; 30669 part no. 0238-0640
6	CAPACITOR, FIXED, MICA DIELECTRIC: 39 pf, ±5%, 500 vdc; 72136 part no. DM15-390J; 30669 part no. 0317-5170
7	CAPACITOR, VARIABLE, CERAMIC DIELECTRIC: 2-1.5 pf; 18796 part no. 530-000-2-1-5PF; 30669 part no. 0327-3920
8	CAPACITOR, VARIABLE: 0.7-3 pf; 30669 part no. 0319-1254
9	COIL, RADIO REQUENCY: 100 uf; 82412 part no. 1315-12; 30669 part no. 2110-2520
10	COIL, RADIO FREQUENCY: 47 uf; 82412 part no. 1315-4; 30669 part no. 2110-2510
11	COIL, RADIO FREQUENCY: 4.7 uh; 82412 part no. 4425-14; 30669 part no. 2110-2500
12	CONNECTOR, RECEPTACLE, ELECTRICAL: BNC type; 81349 part no. UG1094U; 30669 part no. 0906-0120
13	KNOB: LEVER SWITCH: 76854 part no. 29720-001; 30669 part no. 4501-0880
14	RESISTOR, FIXED, COMPOSITION: 10 ohms, 1/4 w; 01121 part no. CB1005; 30669 part no. 0235-4140
15	RESISTOR, FIXED, COMPOSITION: 100 ohms, 1/4 w; 01121 part no. CB1015; 30669 part no. 0235-4380
16	RESISTOR, FIXED, COMPOSITION: 1,000 ohms, 1/4 w; 01121 part no. CB1025; 30669 part no. 0235-4620
17	RESISTOR, FIXED, COMPOSITION: 10,000 ohms, 1/4 w; 01121 part no. CB1035; 30669 part no. 0235-4850
18	RESISTOR, FIXED, COMPOSITION: 100,000 ohms, 1/4 w; 01121 part no. CB1045; 30669 part no. 0235-5090
19	RESISTOR, FIXED, COMPOSITION: 1,100 ohms, 1/4 w; 01121 part no. CB1125; 30669 part no. 0235-4630
20	RESISTOR, FIXED, COMPOSITION: 1,200 ohms, 1/4 w; 01121 part no. CB1225; 30669 part no. 0235-4640
21	RESISTOR, FIXED, COMPOSITION: 1,500 ohms, 1/4 w; 01121 part no. CB1525; 30669 part no. 0235-4650
22	RESISTOR, FIXED, COMPOSITION: 15,000 ohms, 1/4 w; 01121 part no. CB1535; 30669 part no. 0235-4890
23	RESISTOR, FIXED, COMPOSITION: 1,800 ohms, 1/4 w; 01121 part no. CB1825; 30669 part no. 0235-4670
24	RESISTOR, FIXED, COMPOSITION: 2,000 ohms, 1/4 w; 01121 part no. CB2025; 30669 part no. 0235-4680
25	RESISTOR, FIXED, COMPOSITION: 220 ohms, 1/4 w; 01121 part no. CB2215; 30669 part no. 0235-4460
26	RESISTOR, FIXED, COMPOSITION: 2,400 ohms, 1/4 w; 01121 part no. CB2425; 30669 part no. 0235-4700
27	RESISTOR, FIXED, COMPOSITION: 2,700 ohms, 1/4 w; 01121 part no. CB2725; 30669 part no. 0235-4710

Note 1. See Appendix A for AN/USM-281E List of Common Item Descriptions.

TABLE 7-3. LIST OF COMMON ITEM DESCRIPTIONS (CONT)

ITEM NO. (Note 1)	DESCRIPTION
28	RESISTOR, FIXED, COMPOSITION: 3,000 ohms, 1/4 w; 01121 part no. CB3025; 30669 part no. 0235-4720
29	RESISTOR, FIXED, COMPOSITION: 3,300 ohms, 1/4 w; 01121 part no. CB3325; 30669 part no. 0235-4730
30	RESISTOR, FIXED, COMPISITION: 47 ohms, 1/4 w; 01121 part no. CB4705; 30669 part no. 0235-4300
31	RESISTOR, FIXED, COMPOSITION: 470 ohms, 1/4 w; 01121 part no. CB4715; 30669 part no. 0235-4540 32
32	RESISTOR, FIXED, COMPOSITION: 4,700 ohms, 1/4 w; 01121 part no. CB4725; 30669 part no. 0235-4770
33	RESISTOR, FIXED, COMPOSITION: 47,000 ohms, 1/4 w; 01121 part no. CB4735; 30669 part no. 0235-5010
34	RESISTOR, FIXED, COMPOSITION: 51 ohms, 1/4 w; 01121 part no. CB5105; 30669 part no. 0235-4310 35
35	RESISTOR,FIXED,COMPOSITION: 680 ohms, 1/4 w;01121 part no. CB6815; 30669 part no. 0235-4580
36	RESISTOR, FIXED, COMPOSITION: 6,800 ohms, 1/4 w; 01121 part no. CB6825; 30669 part no. 0235-4810
37	RESISTOR, FIXED, COMPOSITION: 750 ohms, 1/4 w; 01121 part no. CB7515; 30669 part no. 0235-4590
38	RESISTOR, FIXED, FILM: 100 ohms, ±1%, 1/8 w; 91637 part no. MFF1-8-1000T1; 30669 part no. 0238-8770
39	RESISTOR, FIXED, FILM: 261 ohms, ±1%, 1/8 w; 01637 part no. MFF1-8-2610T1; 30669 part no. 0238-9210
40	RESISTOR, FIXED, FILM: 909 ohms, ±1%, 1/8 w; 91637 part no. MFF1-8-9090T1; 30669 part no. 0238-9440
41	SCREW, TIP: 30669 part no. 3005-9058
42	SEMICONDUCTOR DEVICE, DIODE: 07263 part no. FD300; 30669 part no. 2601-2320
43	SEMICONDUCTOR DEVICE, DIODE: 07263 part no. FD100; 30669 part no. 2600-6930
44	SEMICONDUCTOR DEVICE, DIODE: 400 piv; 11961 part no. S1400; 30669 part no. 2601-0570
45	SEMICONDUCTOR DEVICE, DIODE: Zener; 01295 part no. 1N752A; 30669 part no. 2600-9360
46	SEMICONDUCTOR DEVICE, DIODE: Matched pair; 30669 part no. 2600-3181
47	SOCKET, TRANSISTOR: 71785 part no. 133-23-92-041; 30669 part no. 3401-1020
48	TRANSISTOR: NPN; 07263 part no. 2N3563; 30669 part no. 2631-3490
49	TRANSISTOR: NPN; 07263 part no. 2N3565; 30669 part no. 2600-9860
50	TRANSISTOR: PNP; 07263 part no. 2N3640; 30669 part no. 2600-9810
51	TRANSISTOR: NPN; 07263 part no. 2N3646; 30669 part no. 2600-9880
52	TRANSISTOR: NPN; 07263 part no. 2N3964; 30669 part no. 2601-0420
53	TRANSISTOR: PNP; 07263 part no. 2N4916; 30669 part no. 2601-0160

Note 1. See Appendix A for AN/USM-281E List of Common Item Descriptions.

TABLE 7-4. LIST OF ATTACHING HARDWARE

ITEM NO. (Note 1)	DESCRIPTION
A.	LUG, SOLDER, STEEL CADMIUM PLATED, no. 4, 30669 part no. 5101-3720
B.	MACHINE SCREW, BH, STAINLESS STEEL, 32 x 1/4, no. 6, 30669 part no. 6009-6150
C.	MACHINE SCREW, BH, STAINLESS STEEL, 40 x 1/2, no. 4, 30669 part no. 6009-6080
D.	MACHINE SCREW, BH, STAINLESS STEEL, 4-40 x 5/16, no. 4, 30669 part no. 6009-6090
E.	MACHINE SCREW, BH, STAINLESS STEEL, 32 x 5/16, no. 6, 30669 part no. 6009-6160
F.	MACHINE SCREW, BH, STAINLESS STEEL, 32 x 5/8, no. 10, 30669 part no. 6009-6430
G.	MACHINE SCREW, FLAT HEAD, STAINLESS STEEL, 32 x 1/4, no. 6, 30669 part no. 6009-6660
H.	NUT, HEX, STEEL CADMIUM PLATED, no. 3/8-32 x 3/32 in. thk, 1/2 A.F. 30669 part no. 6101-3860
I.	NUT, HEX, STEEL CADMIUM PLATED, 32 x 1/4, no. 6, 30669 part no. 6100-0600
J.	NUT, HEX, STEEL CADMIUM PLATED, 32 x 3/8 x 1/8, no. 10, 30669 part no. 6100-1630
K.	NUT/LOCKWASHER, STEEL CADMIUM PLATED, no. 6-32, 30669 part no. 6103-2730
L.	NUT, SPRING, STEEL CADMIUM PLATED, no. 6-32, 30669 part no. 6103-9060
M.	WASHER, SPLIT, STEEL CADMIUM PLATED, no. 4, 30669 part no. 6210-0010
N.	WASHER, INTERNAL, STEEL CADMIUM PLATED, no. 6, 30669 part no. 6220-0030
O.	LOCKWASHER, TYPE "A", STEEL CADMIUM PLATED, no. 3/8, 30669 part no. 6220-0100
P.	LOCKWASHER, TYPE "A", STEEL CADMIUM PLATED, no. 1/4, 30669 part no. 6220-1810

Note 1. See Appendix A for AN/USM-281E List of Attaching Hardware.

TABLE 7-5. LIST OF MANUFACTURER'S CODES

H4-1 CODES	MANUFACTURER AND ADDRESS (Note 1)
00779	AMP Inc., Harrisburg, Pa.
01121	Allen Bradley Co., Milwaukee, Wis.
01295	Texas Instruments Inc., Semiconductor Components Div., Dallas, Texas
02114	Ferrozcube Corp., Saugerties, N.Y.
03508	General Electric Co., Semiconductor Products Dept., Syracuse, N.Y.
03888	Pyrofilm Resistor Co. Inc., Whippany, N.J.
04713	Motorola Semiconductor Products Inc., Phoenix, Arizona
04850	Permag Corp., Jamaica, N.Y.
05010	Gulton Industries Inc., Instrumentation Products Division, Metuchen, N.J.
05820	Wakefield Engineering, Wakefield, Mass.
07137	Tec Inc., South Eden Prairie, Minn.
07263	Fairchild Semiconductor, a Div. of Fairchild Camera and Instrument Corp., Mountain View, Calif.
12697	Clarostat Mfg. Co. Inc., St. Cover, N.H.
17896	Siliconix Inc., Santa Clara, Calif.
18714	RCA Corp. Solid State Division, Findlay, Ohio
18796	Erie Technological Products Inc., State College, Pa.
22753	UID Electronics Corp., Hollywood, Fla.
24546	Corning Glass Works, Bradford, Pa.
28959	Hoffman Electronics Corp., El Monte, Calif.
29604	Stackpole Components Co., Raleigh, N.C.
30669	Dumont Oscilloscope Laboratories Inc., West Caldwell, N.J.
32767	Griffith Plastics Products Co., Burlingame, Calif.
32997	Bourns Inc., Trimpot Products Division, Riverside, Calif.
34114	See 76854
56289	Sprague Electric Co., North Adams, Mass.
71400	Bussman Mfg. Division of McGraw-Edison Co., St. Louis, Mo.
71590	Globe Union Inc., Centralab Div., Milwaukee, Wis.
71785	Cinch Mfg. Co., Howard B. Jones Div., Chicago, Ill.
72136	Electro Motive Mfg. Co. Inc., Willimantic, Conn.
72928	Gudeman Div. of Gulton Industries Inc., Chicago, Ill.
73445	Amperex Electronic Corp., Hicksville, Long Island, N.Y.
74970	Johnson EF Co., S.W. Waseca, Minn.
75915	Littlefuse Inc., Des Plaines, Ill.
76854	Oak Mfg. Co., Div. Oak Electro/Netics Corp., Crystal Lakes, Ill.
80031	Mepco Inc. Div. of Sessions Clock Co., Morristown, N.J.
81073	Grayhill Inc., La Grange, Ill.
82412	Airco Speer Electronics Components, Du Bois, Pa.
82389	Switchcraft Inc., Chicago, Ill.
82893	Vector Engineering,Sylmar, Ca.
84048	IRC Division of TRW Inc., St. Petersburg Plant, St. Petersburg, Florida
84171	Arco Electronics Inc., Great Neck, N.Y.
84411	TRW Capacitor Division, St. Ogallala, Nebr.
89737	King Electronics and Mfg. Co., Cleveland, Ohio
90201	Mallory Capacitor Co., Indianapolis, Ind.
91418	Radio Materials Co., Chicago, Ill.
91506	Augat Inc., Attleboro, Mass.
91637	Dale Electronics Inc., Columbus, Nabr.
91934	Miller Electric Co., Div. of Avnet Corp., Woonsocket, R.I.
95146	Alco Electronics Products Inc., Lawrence, Mass.
96924	Grigsby Inc., Washington, D.C.
98291	Sealectro Corp., Mamaroneck, N.Y.

Note 1. See Appendix A for AN/USM-281E List of Manufacturer's Codes.

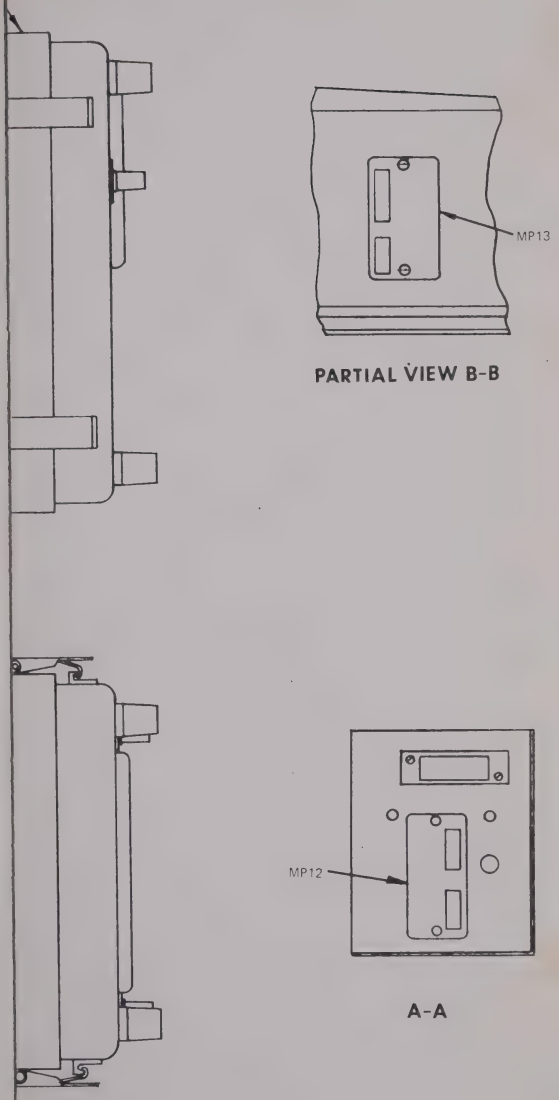

Figure 7-1. Oscilloscope AN USM-281D

TABLE 7-5. LIST OF MANUFACTURER'S CODES

H4-1 CODES	MANUFACTURER AND ADDRESS (Note 1)
00779	AMP Inc., Harrisburg, Pa.
01121	Allen Bradley Co., Milwaukee, Wis.
01295	Texas Instruments Inc., Semiconductor Components Div., Dallas, Texas
02114	Ferrozcube Corp., Saugerties, N.Y.
03508	General Electric Co., Semiconductor Products Dept., Syracuse, N.Y.
03888	Pyrofilm Resistor Co. Inc., Whippany, N.J.
04713	Motorola Semiconductor Products Inc., Phoenix, Arizona
04850	Permag Corp., Jamaica, N.Y.
05010	Gulton Industries Inc., Instrumentation Products Division, Metuchen, N.J.
05820	Wakefield Engineering, Wakefield, Mass.
07137	Tec Inc., South Eden Prairie, Minn.
07263	Fairchild Semiconductor, a Div. of Fairchild Camera and Instrument Corp., Mountain View, Calif.
12697	Clarostat Mfg. Co. Inc., St. Cover, N.H.
17896	Siliconix Inc., Santa Clara, Calif.
18714	RCA Corp. Solid State Division, Findlay, Ohio
18796	Erie Technological Products Inc., State College, Pa.
22753	UID Electronics Corp., Hollywood, Fla.
24546	Corning Glass Works, Bradford, Pa.
28959	Hoffman Electronics Corp., El Monte, Calif.
29604	Stackpole Components Co., Raleigh, N.C.
30669	Dumont Oscilloscope Laboratories Inc., West Caldwell, N.J.
32767	Griffith Plastics Products Co., Burlingame, Calif.
32997	Bourns Inc., Trimpot Products Division, Riverside, Calif.
34114	See 76854
56289	Sprague Electric Co., North Adams, Mass.
71400	Bussman Mfg. Division of McGraw-Edison Co., St. Louis, Mo.
71590	Globe Union Inc., Centralab Div., Milwaukee, Wis.
71785	Cinch Mfg. Co., Howard B. Jones Div., Chicago, Ill.
72136	Electro Motive Mfg. Co. Inc., Willimantic, Conn.
72928	Gudeman Div. of Gulton Industries Inc., Chicago, Ill.
73445	Amperex Electronic Corp., Hicksville, Long Island, N.Y.
74970	Johnson EF Co., S.W. Waseca, Minn.
75915	Littlefuse Inc., Des Plaines, Ill.
76854	Oak Mfg. Co., Div. Oak Electro/Netics Corp., Crystal Lakes, Ill.
80031	Mepco Inc. Div. of Sessions Clock Co., Morristown, N.J.
81073	Grayhill Inc., La Grange, Ill.
82412	Airco Speer Electronics Components, Du Bois, Pa.
82389	Switchcraft Inc., Chicago, Ill.
82893	Vector Engineering,Sylmar, Ca.
84048	IRC Division of TRW Inc., St. Petersburg Plant, St. Petersburg, Florida
84171	Arco Electronics Inc., Great Neck, N.Y.
84411	TRW Capacitor Division, St. Ogallala, Nebr.
89737	King Electronics and Mfg. Co., Cleveland, Ohio
90201	Mallory Capacitor Co., Indianapolis, Ind.
91418	Radio Materials Co., Chicago, Ill.
91506	Augat Inc., Attleboro, Mass.
91637	Dale Electronics Inc., Columbus, Nabr.
91934	Miller Electric Co., Div. of Avnet Corp., Woonsocket, R.I.
95146	Alco Electronics Products Inc., Lawrence, Mass.
96924	Grigsby Inc., Washington, D.C.
98291	Sealectro Corp., Mamaroneck, N.Y.

Note 1. See Appendix A for AN/USM-281E List of Manufacturer's Codes.

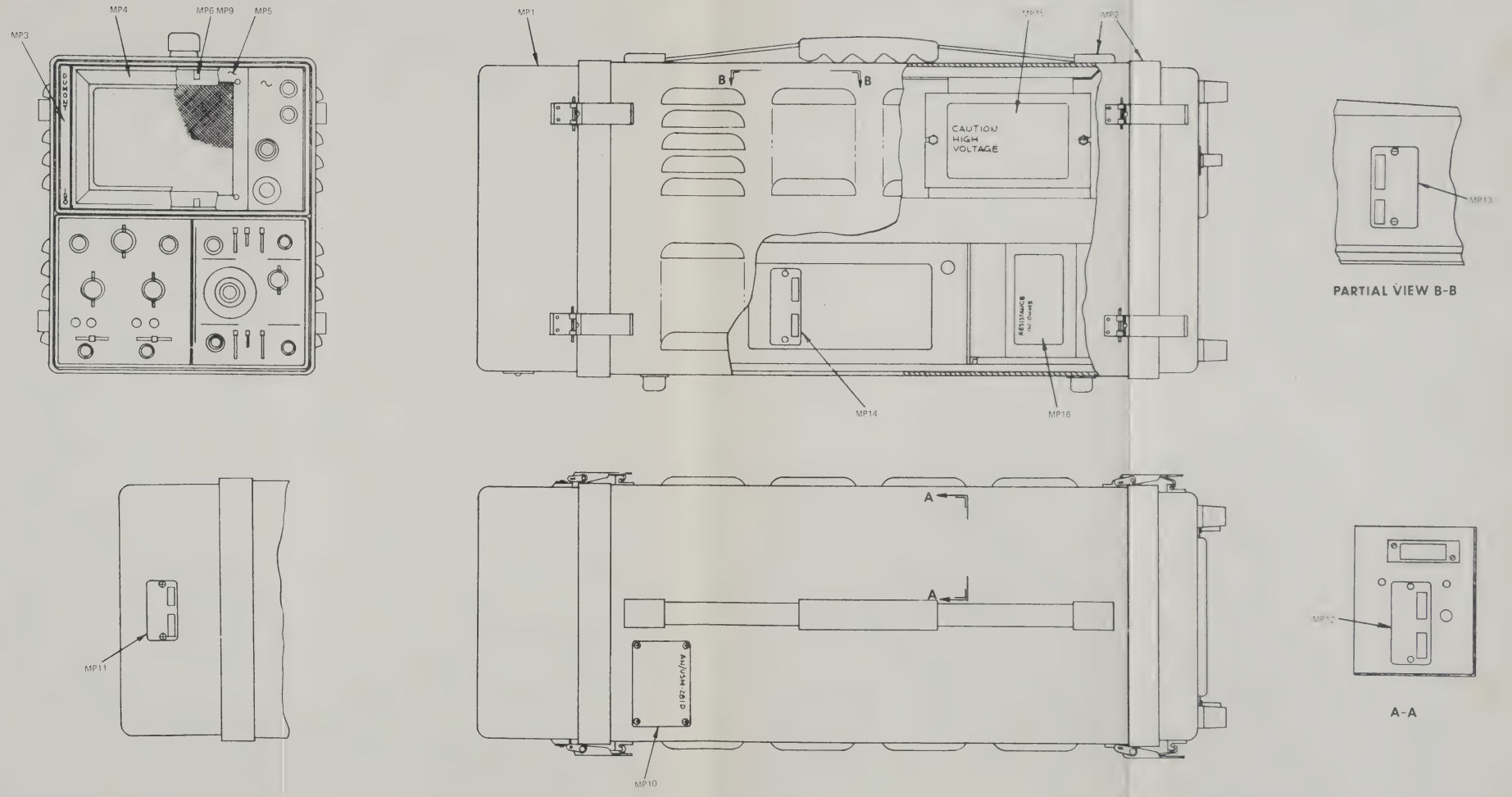

Figure 7-1. Oscilloscope AN USM-281D

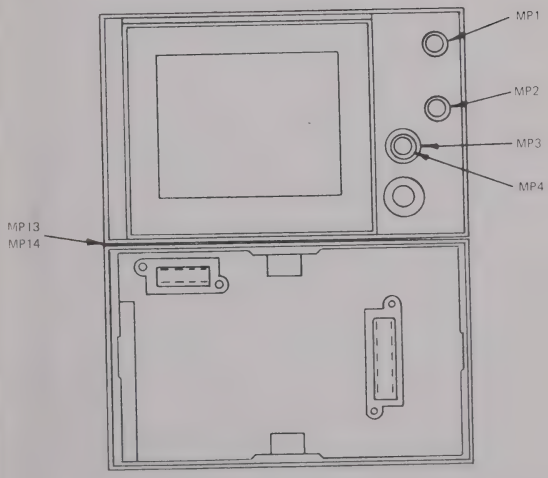

Figure 7-2. Oscilloscope OS-246(P)/U(A1)

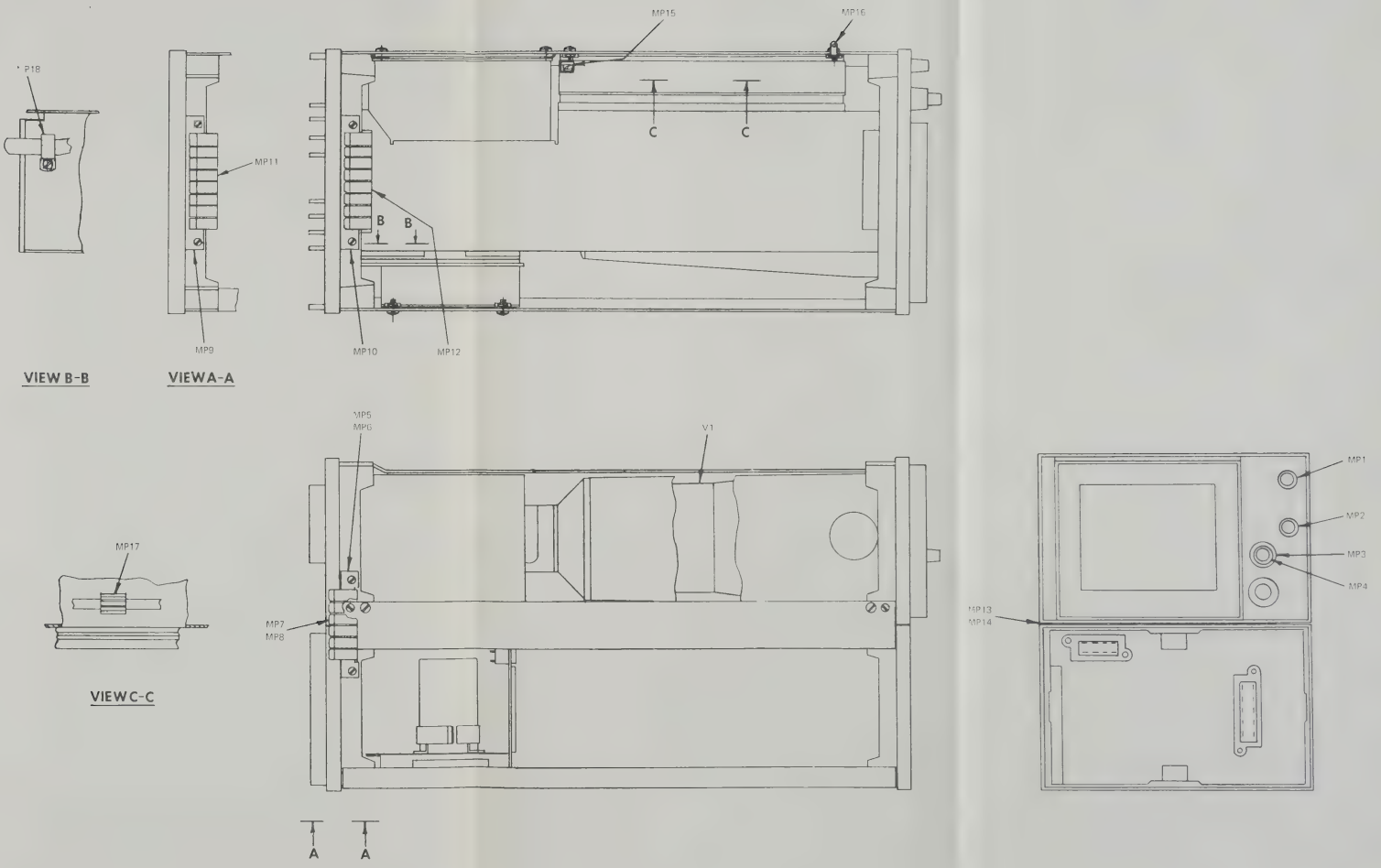

Figure 7-2. Oscilloscope OS-246(P)/U (A1)

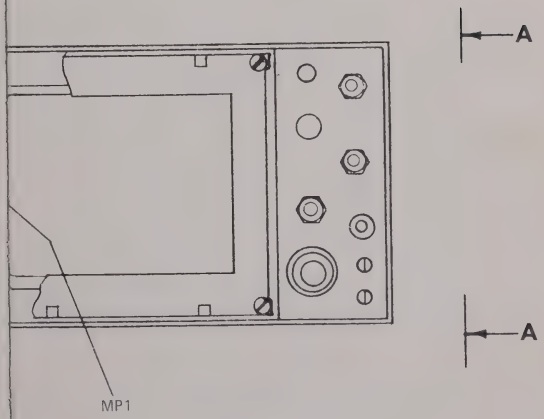

Figure 7-3. Display Section Assembly (A1A1) (Sheet 1 of 2)

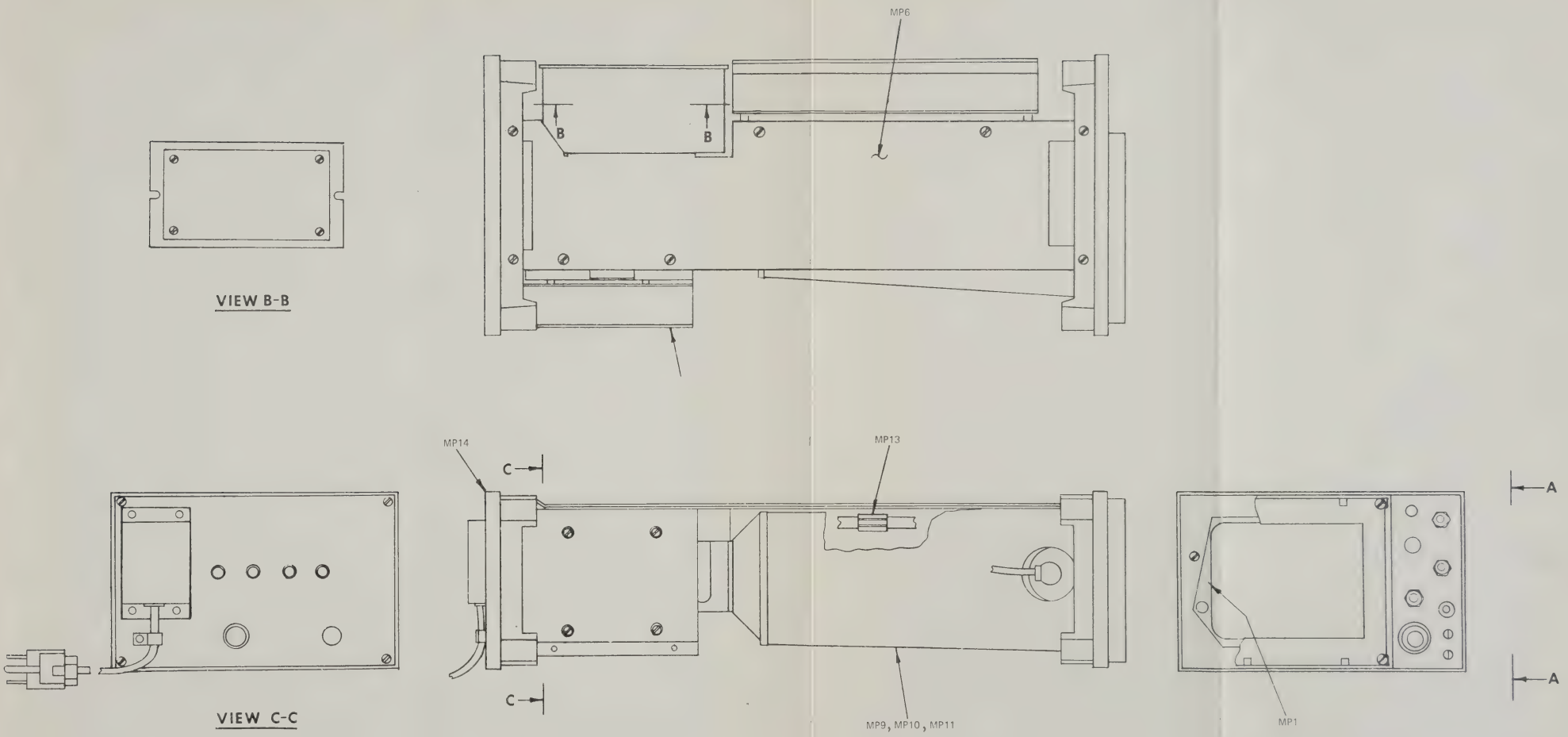

FOR USE ON AN/USM-281D CONFIGURATION ONLY. SEE FIGURE A-16 FOR AN/USM-281E CONFIGURATION.

Figure 7-3. Display Section Assembly (A1A1) (Sheet 1 of 2)

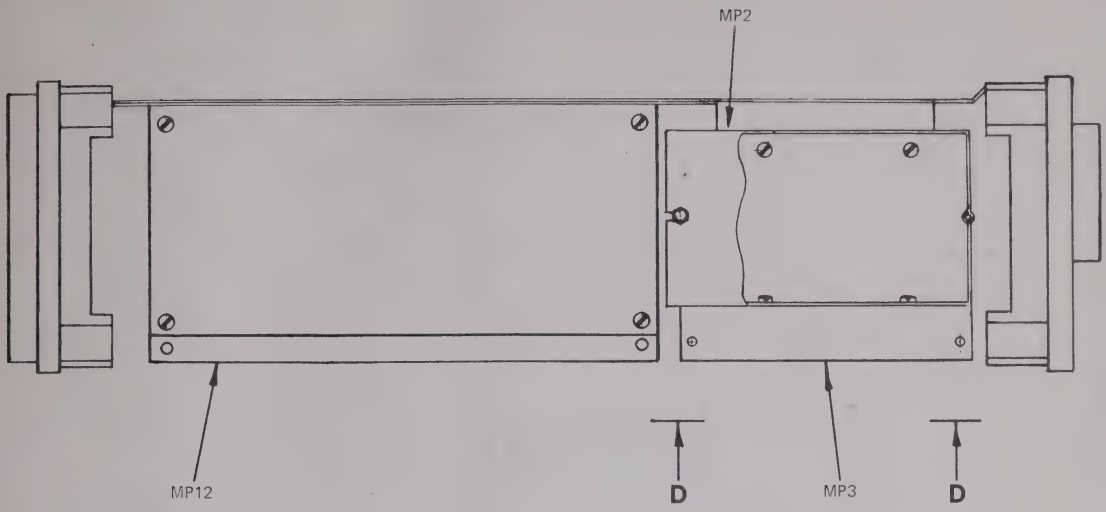

VIEW A-A

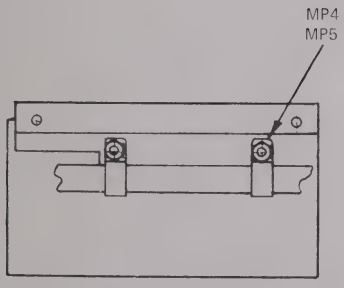

R USE ON AN/USM-281D CONFIGURATION
LY. SEE FIGURE A-16 FOR AN/USM-281E
NFIGURATION.

VIEW D-D

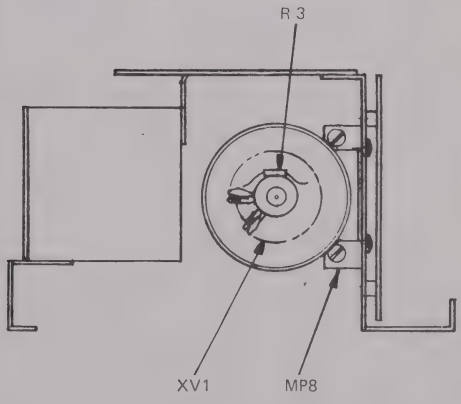

VIEW C-C

Figure 7-3. Display Section Assembly (A1A1)
(Sheet 2 of 2)

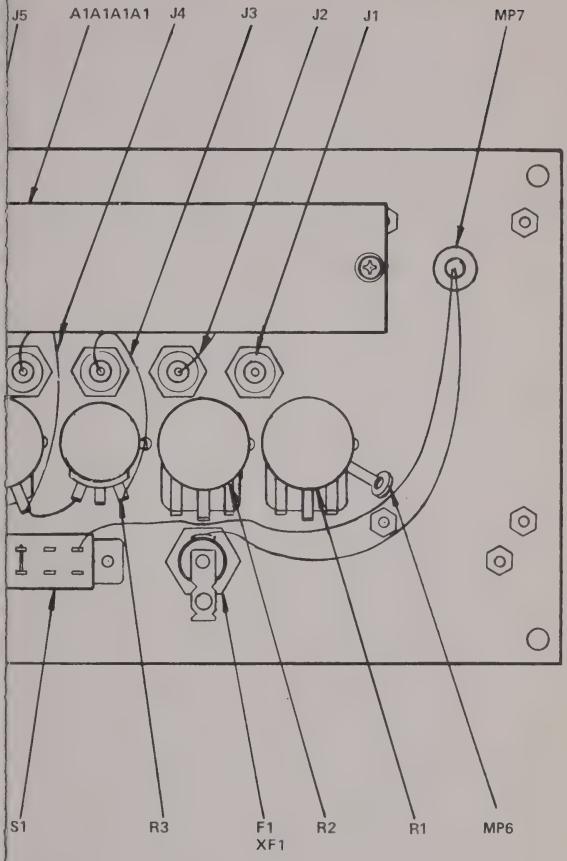

Figure 7-4. Display Panel Assembly, Rear (A1A1A1)

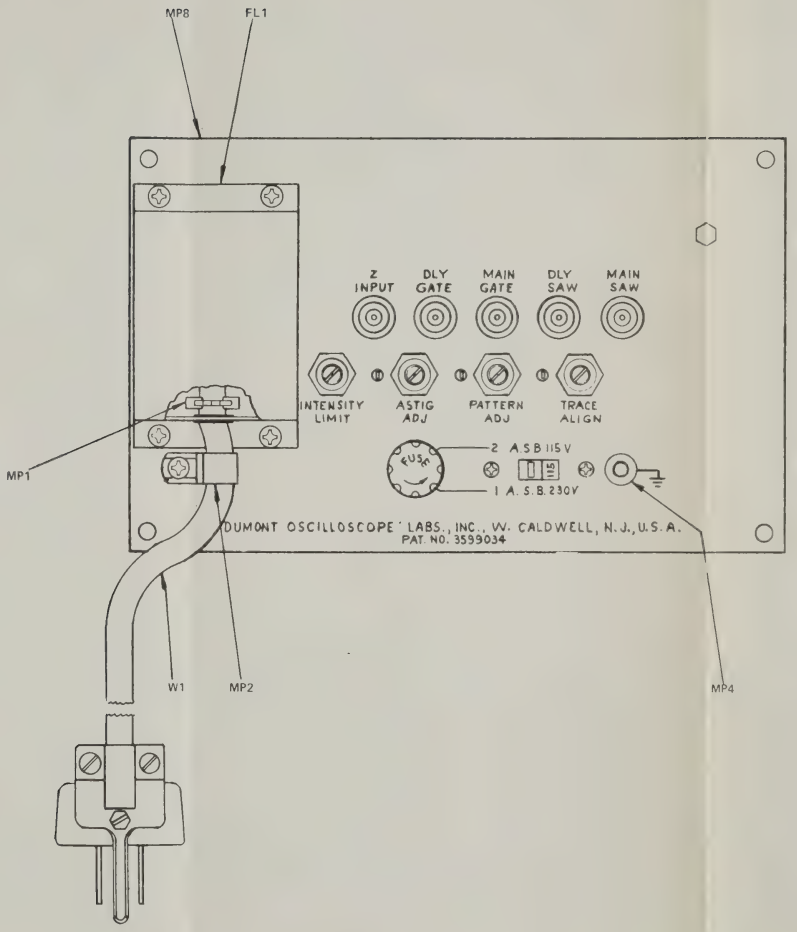

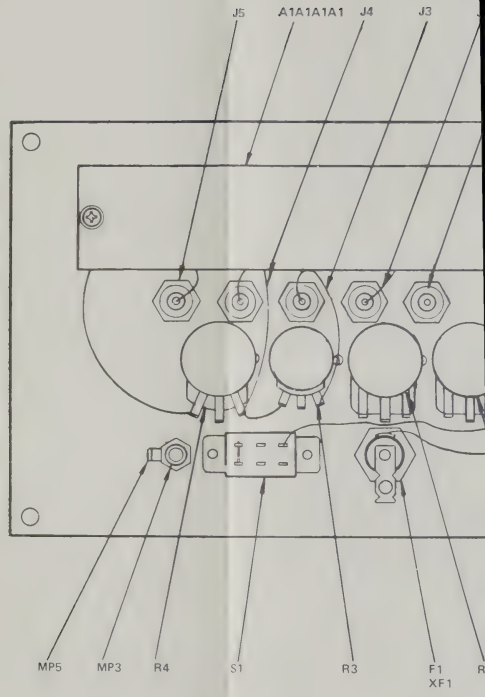

Figure 7-4. Display P
(A1A1A1)

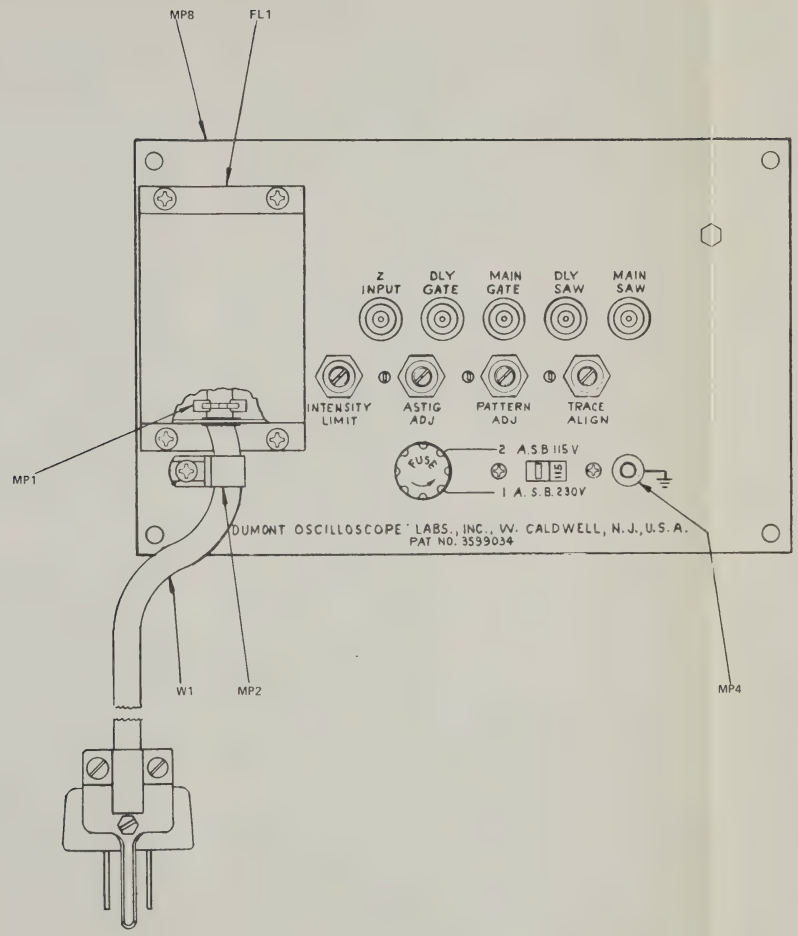

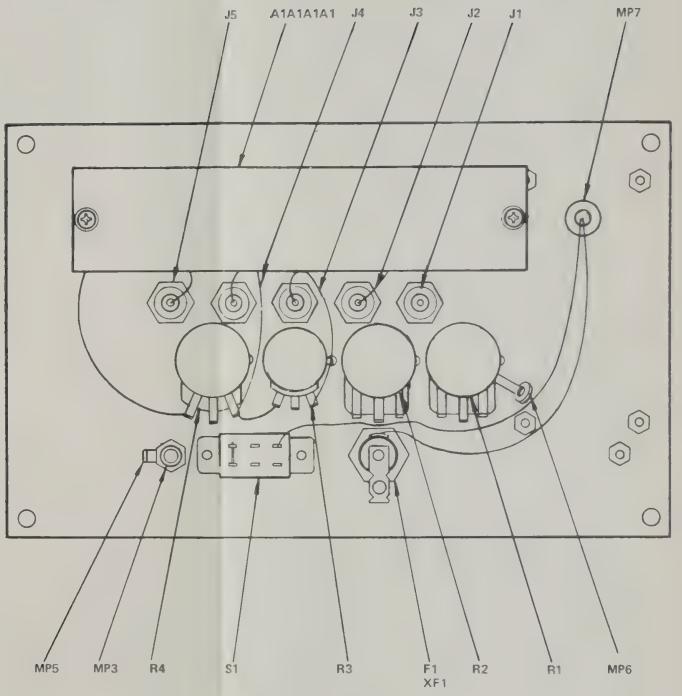

Figure 7-4. Display Panel Assembly, Rear (A1A1A1)

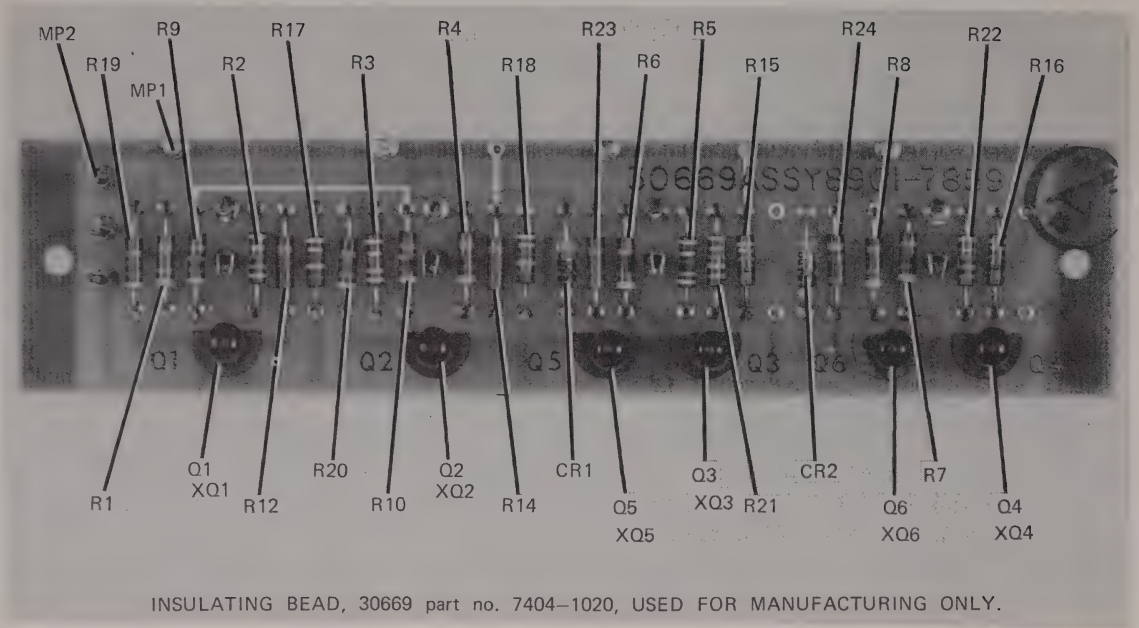

INSULATING BEAD, 30669 part no. 7404–1020, USED FOR MANUFACTURING ONLY.

Figure 7-5. Auxiliary Output Assembly (A1A1A1A1)

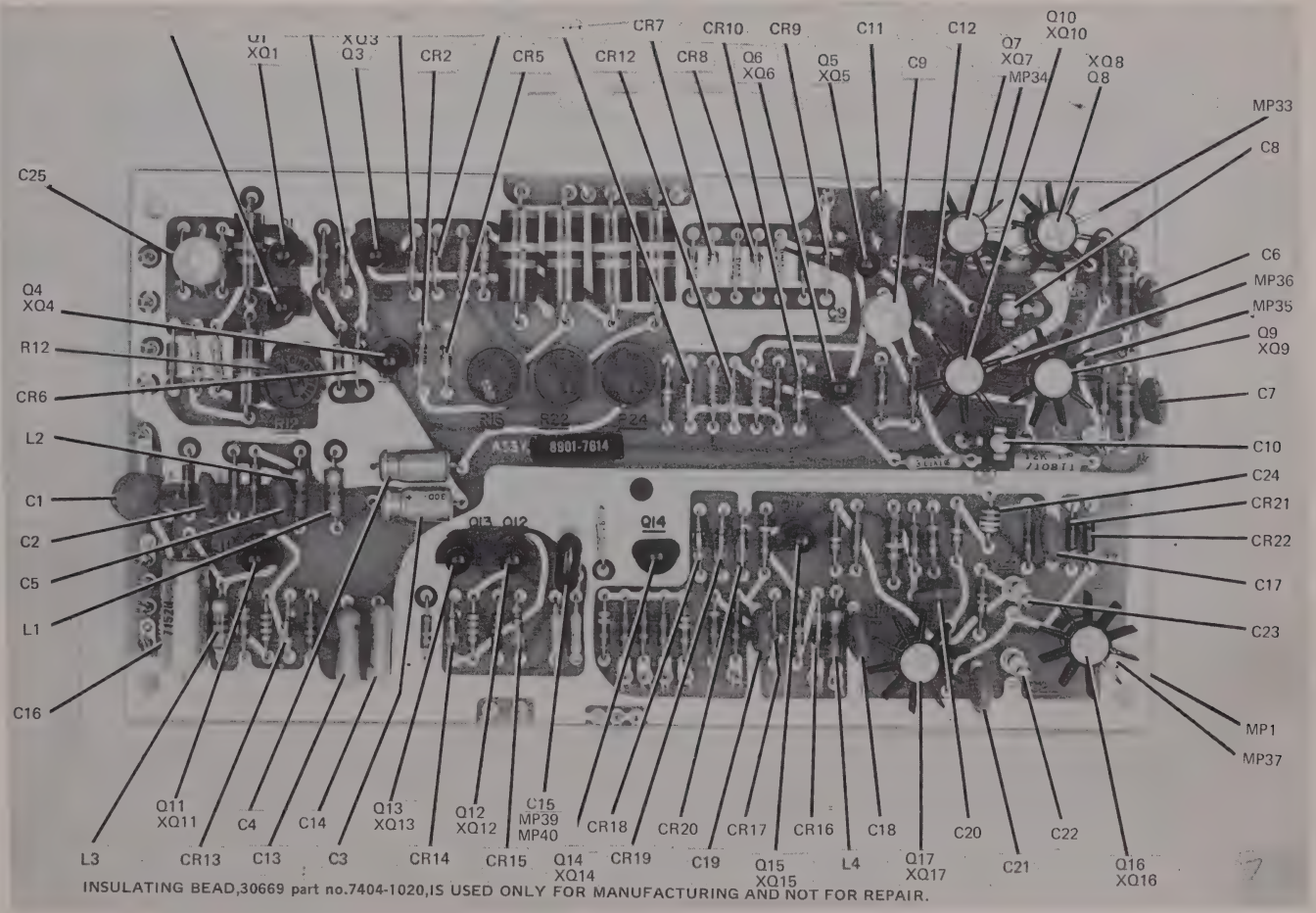

Figure 7-6. Horizontal Output Assembly (A1A1A2) (Sheet 1 of 2)

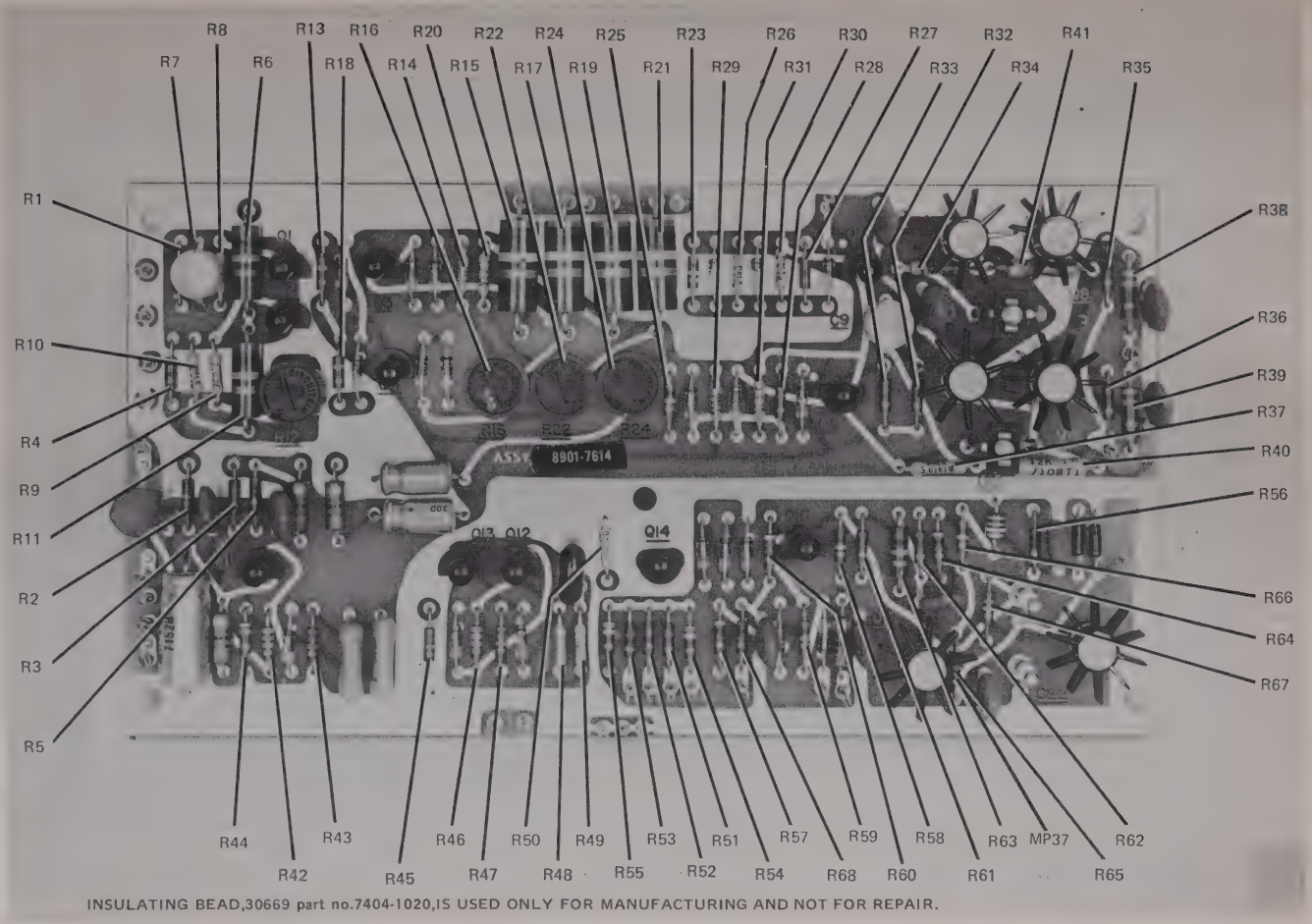

Figure 7-6. Horizintal Output Assembly
(A1A1A2) (Sheet 2 of 2)

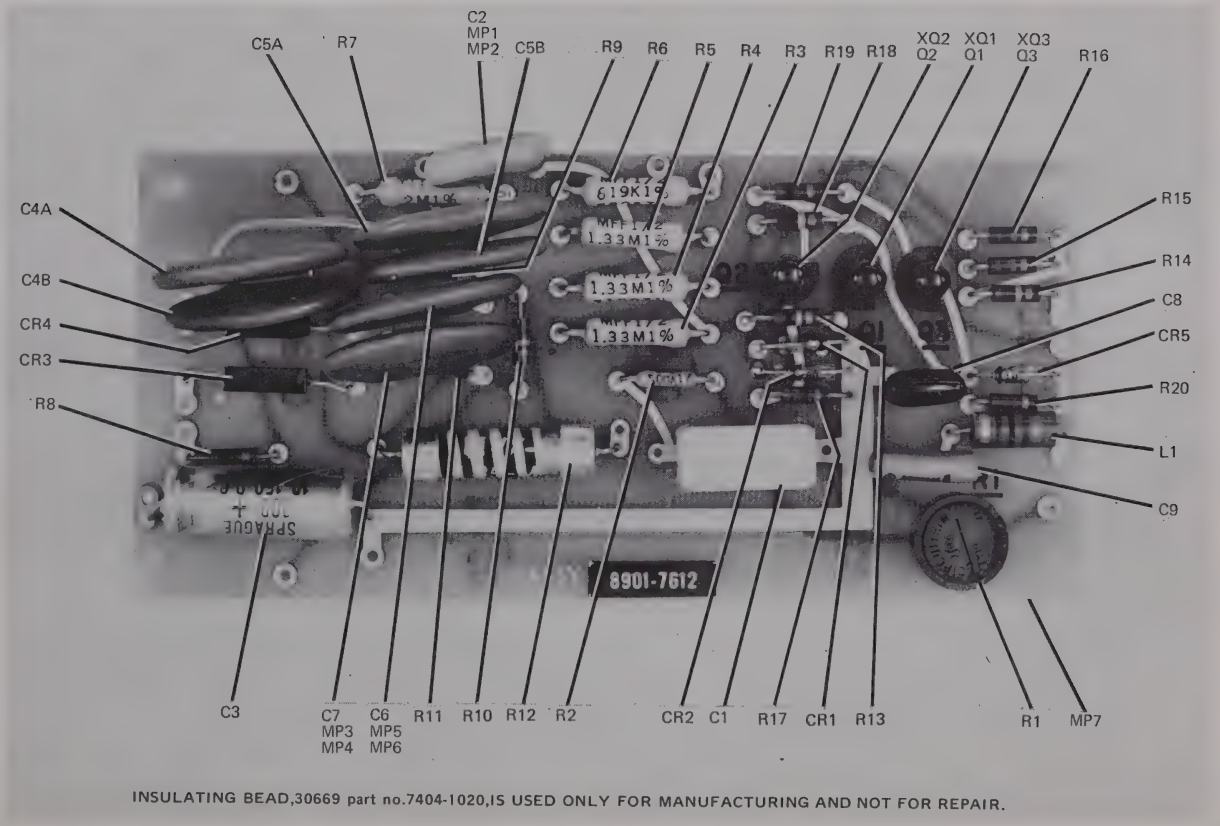

Figure 7-7 High Voltage Assembly
(A1A1A3)

FOR USE ON AN/USM-281D CONFIGURATION ONLY. SEE FIGURE A-18 FOR AN/USM-281E CONFIGURATION.

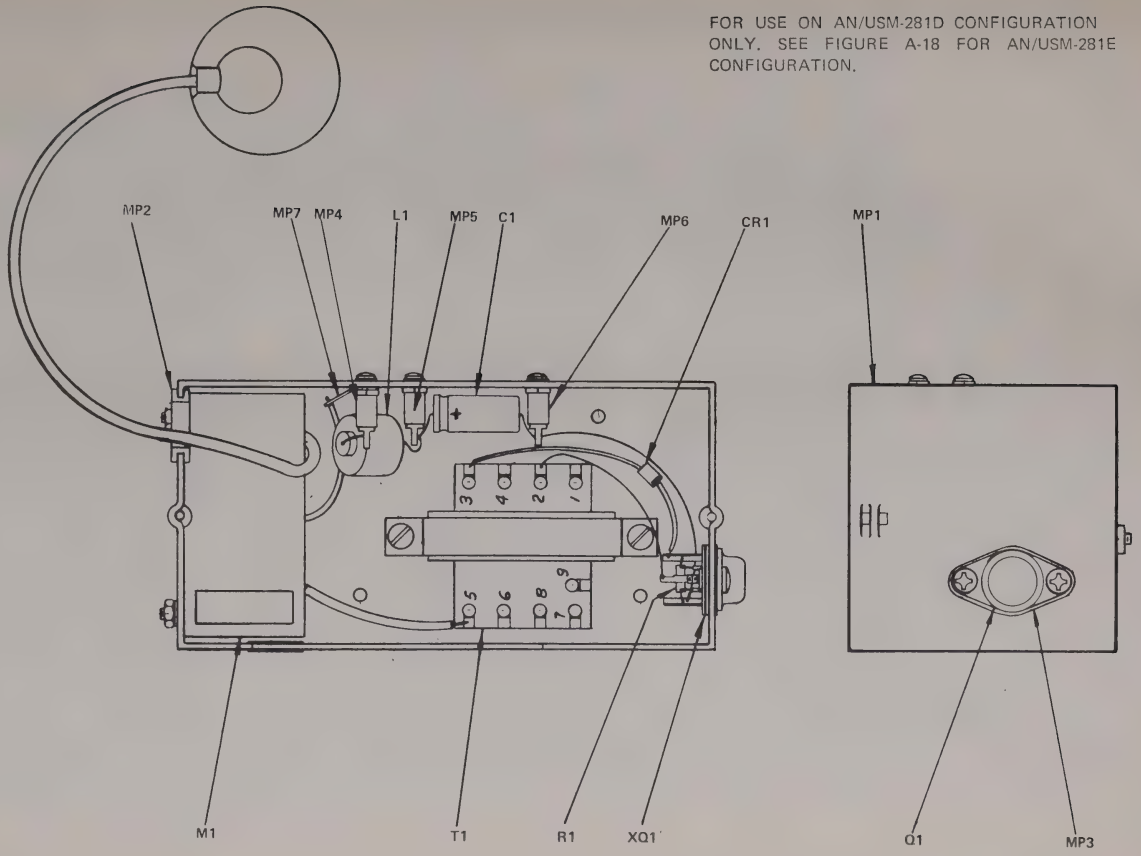

Figure 7-8. High Voltage Chassis Assembly (A1A1A4)

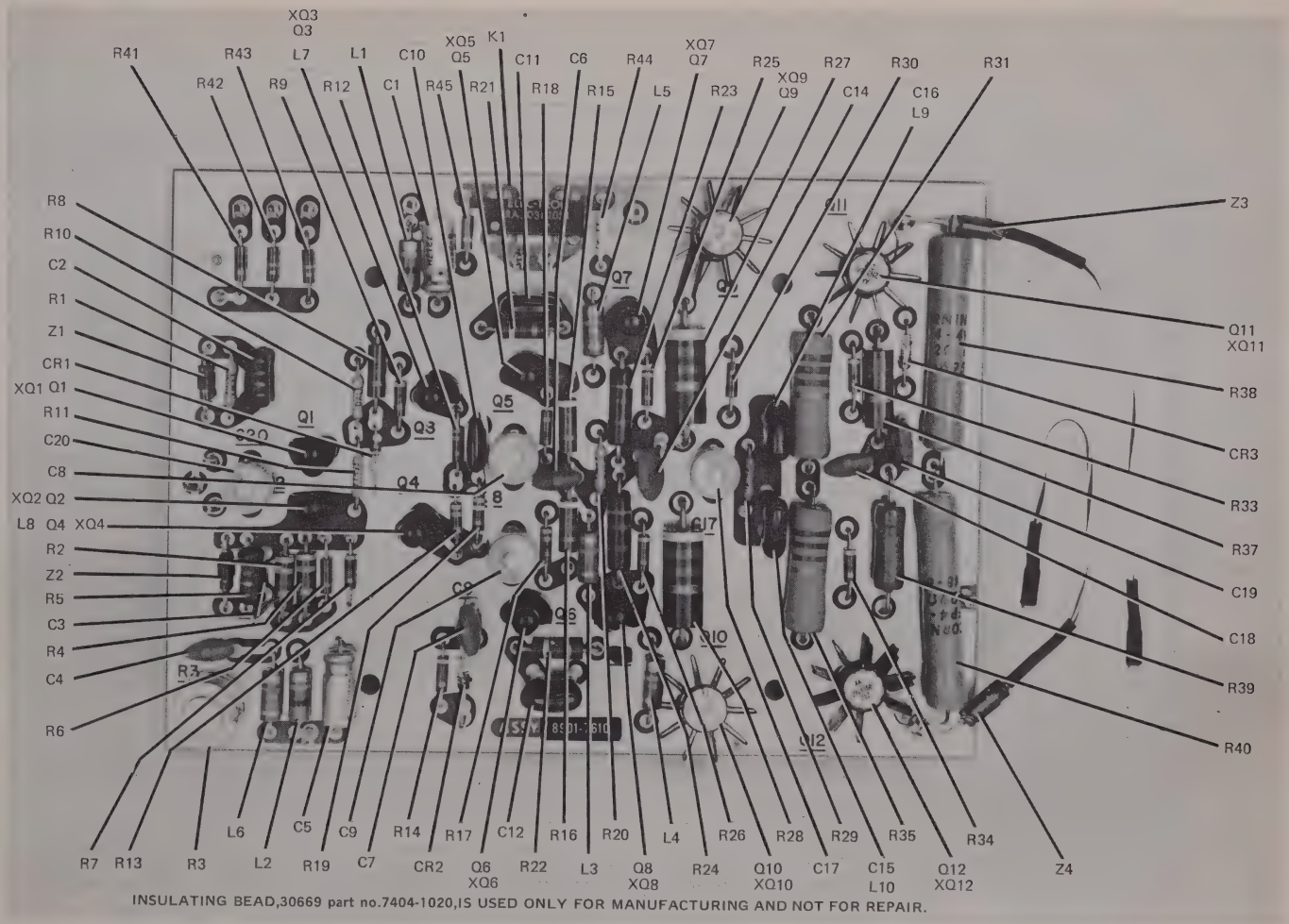

Figure 7-9. Vertical Output Assembly
(A1A1A5) (Sheet 1 of 2)

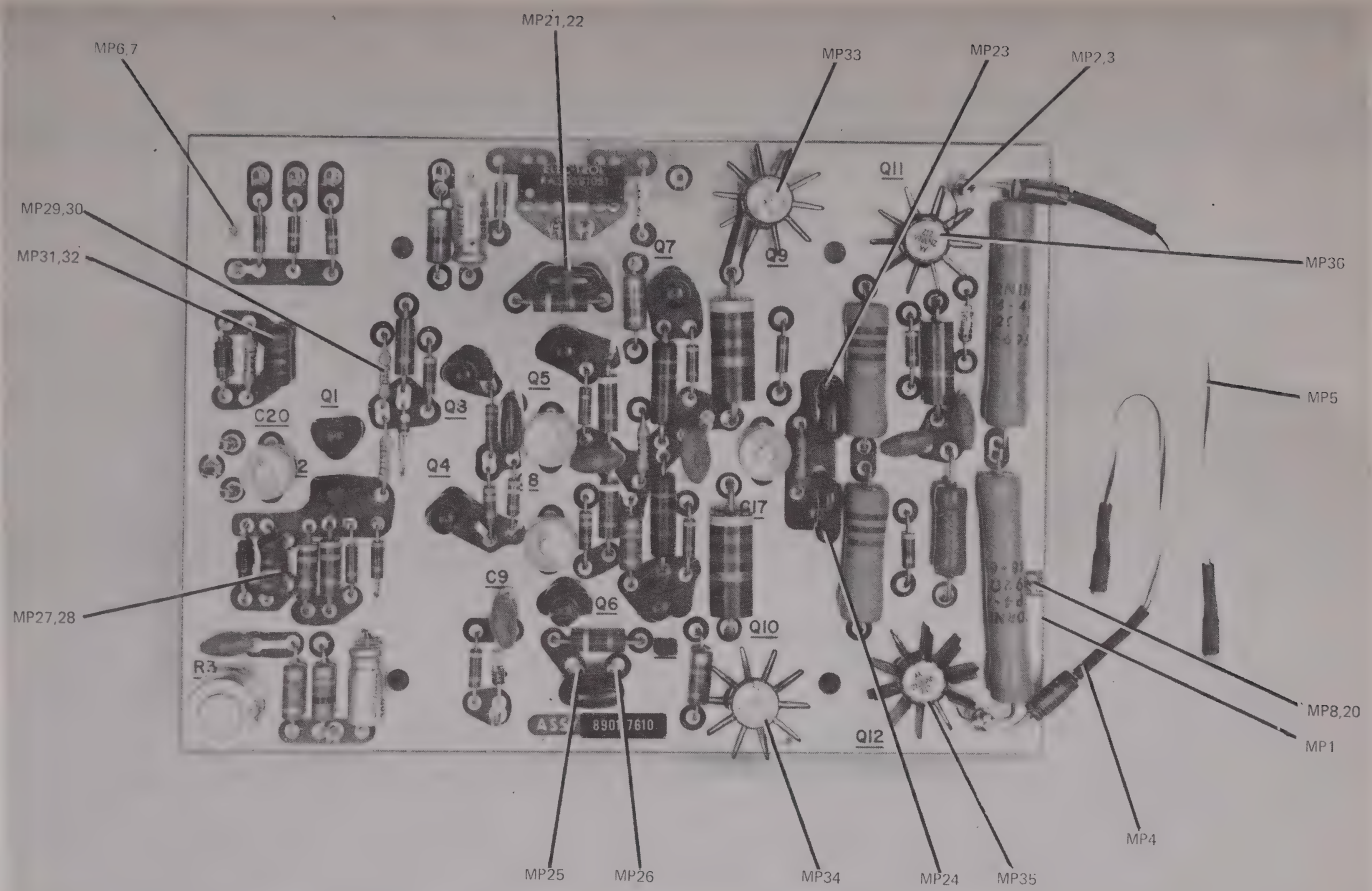

Figure 7-9. Vertical Output Assembly (A1A1A5)
(Sheet 2 of 2)

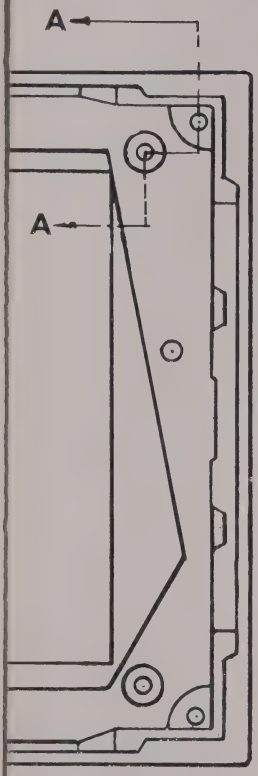

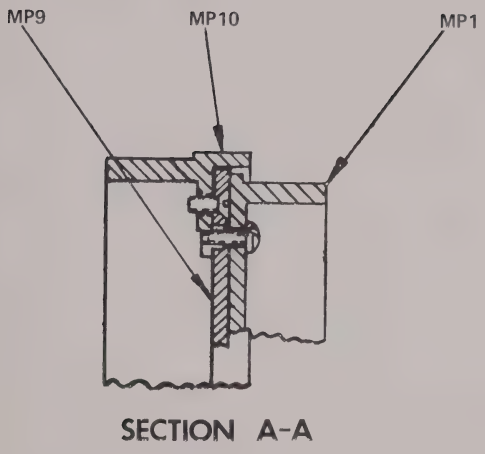

Figure 7-10. Display Panel Assembly (A1A1A6)

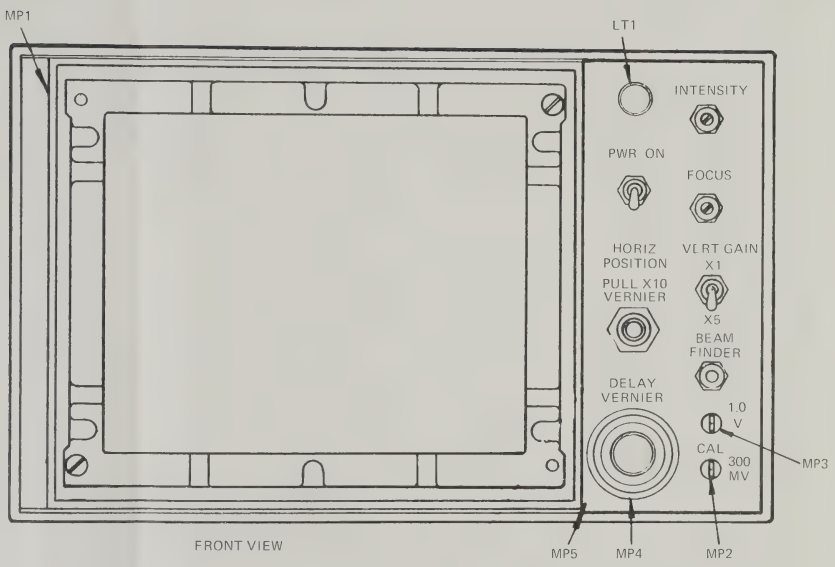

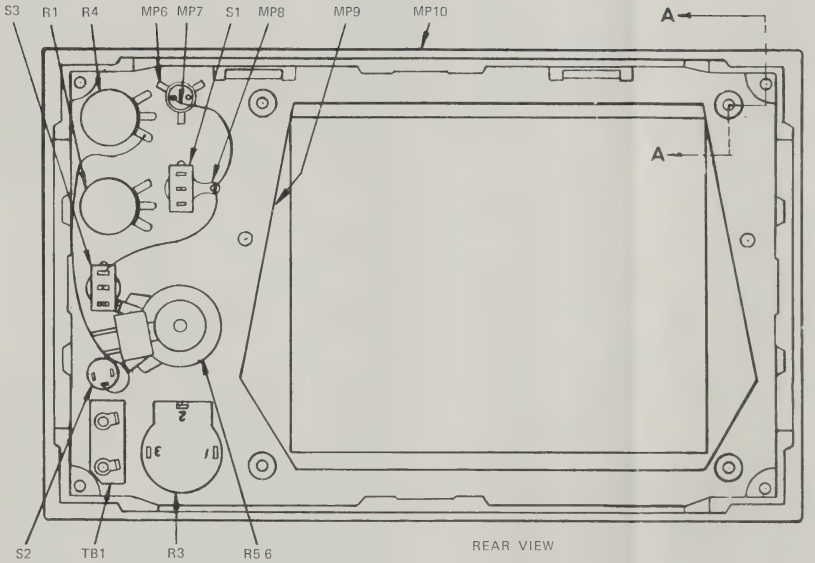

FOR USE ON AN/USM-281D CONFIGURATION ONLY. SEE FIGURE A-20 FOR AN/USM-281E CONFIGURATION.

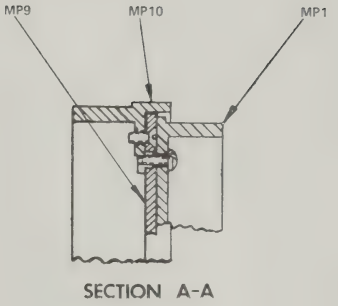

Figure 7-10. Display Panel Assembly (A1A1A6)

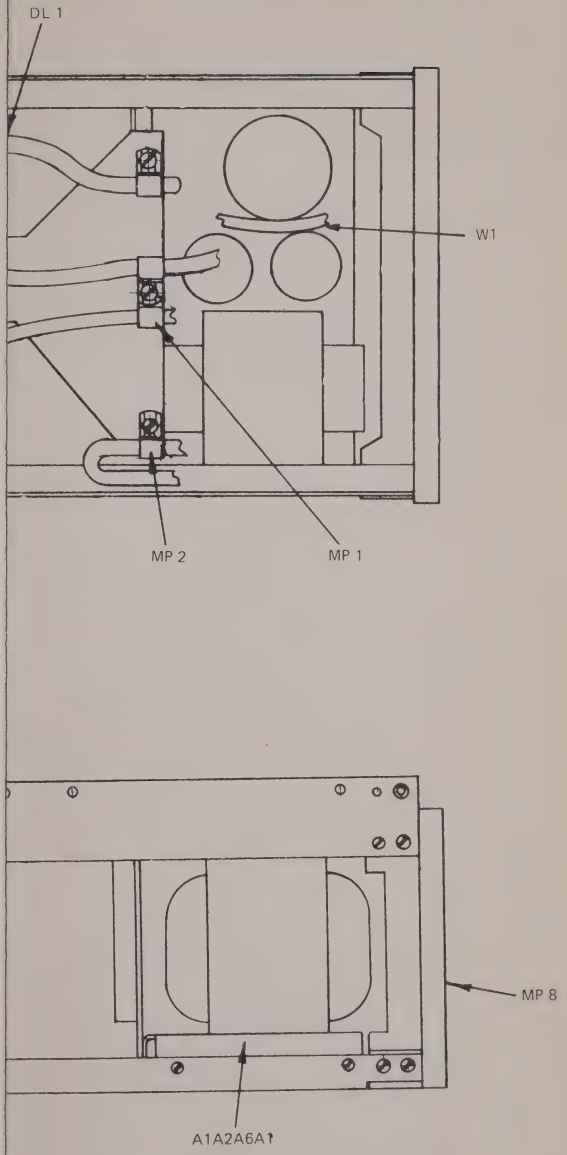

Figure 7-11. Section Assembly, Plug-in (A1A2)

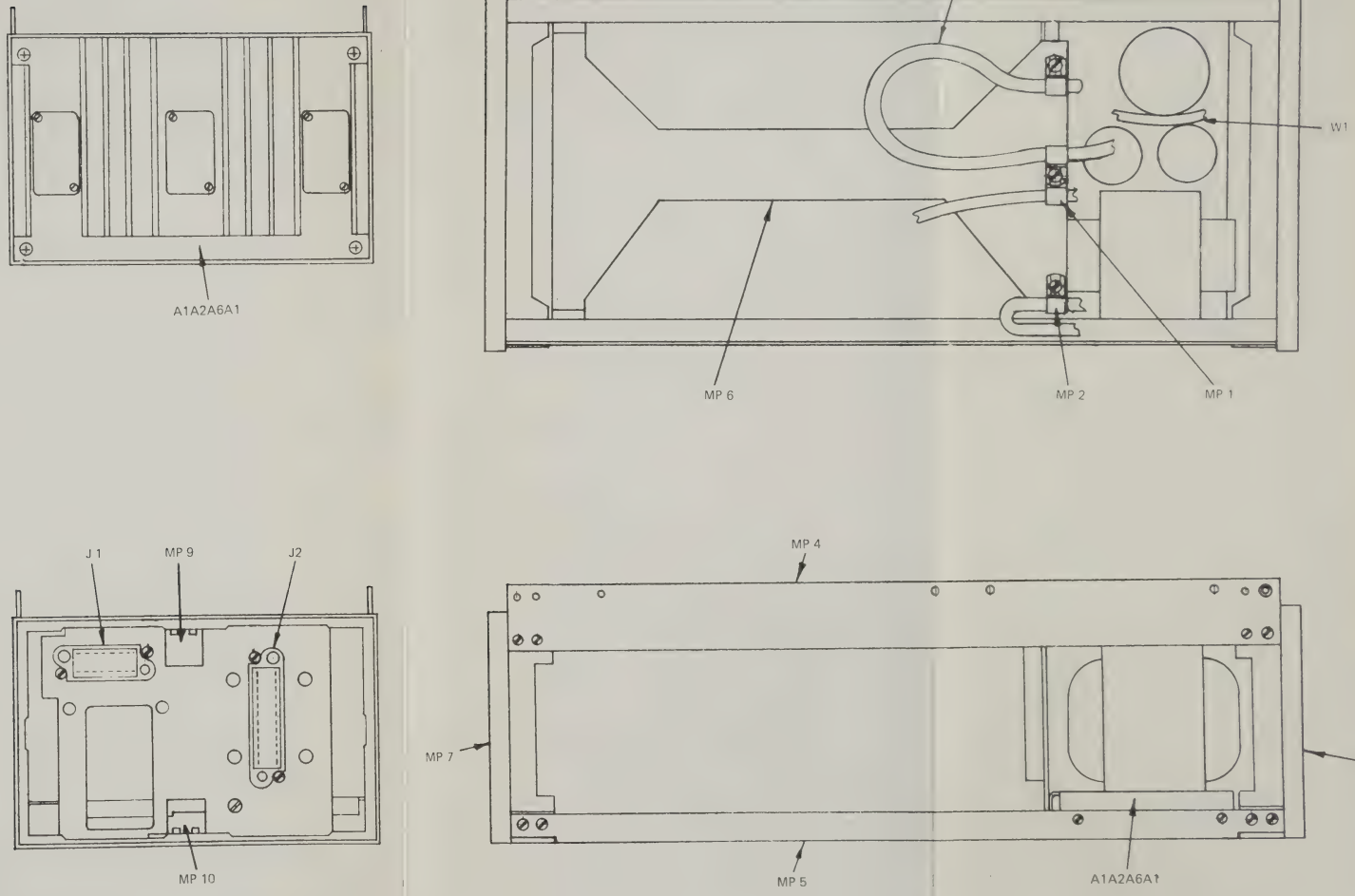

Figure 7-11. Section Assembly, Plug-in (A1A2)

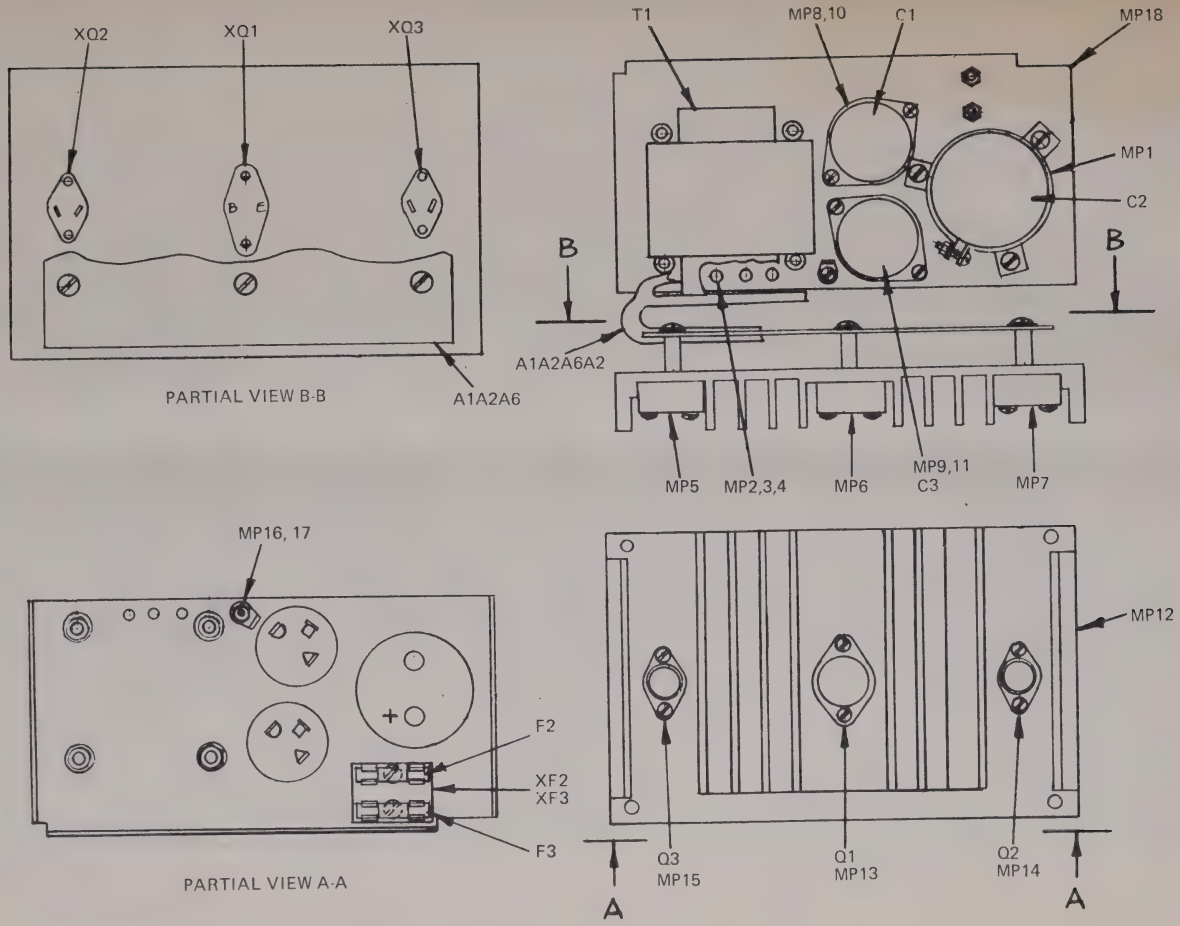

Figure 7-12. Low Voltage Power Supply (A1A2A6)

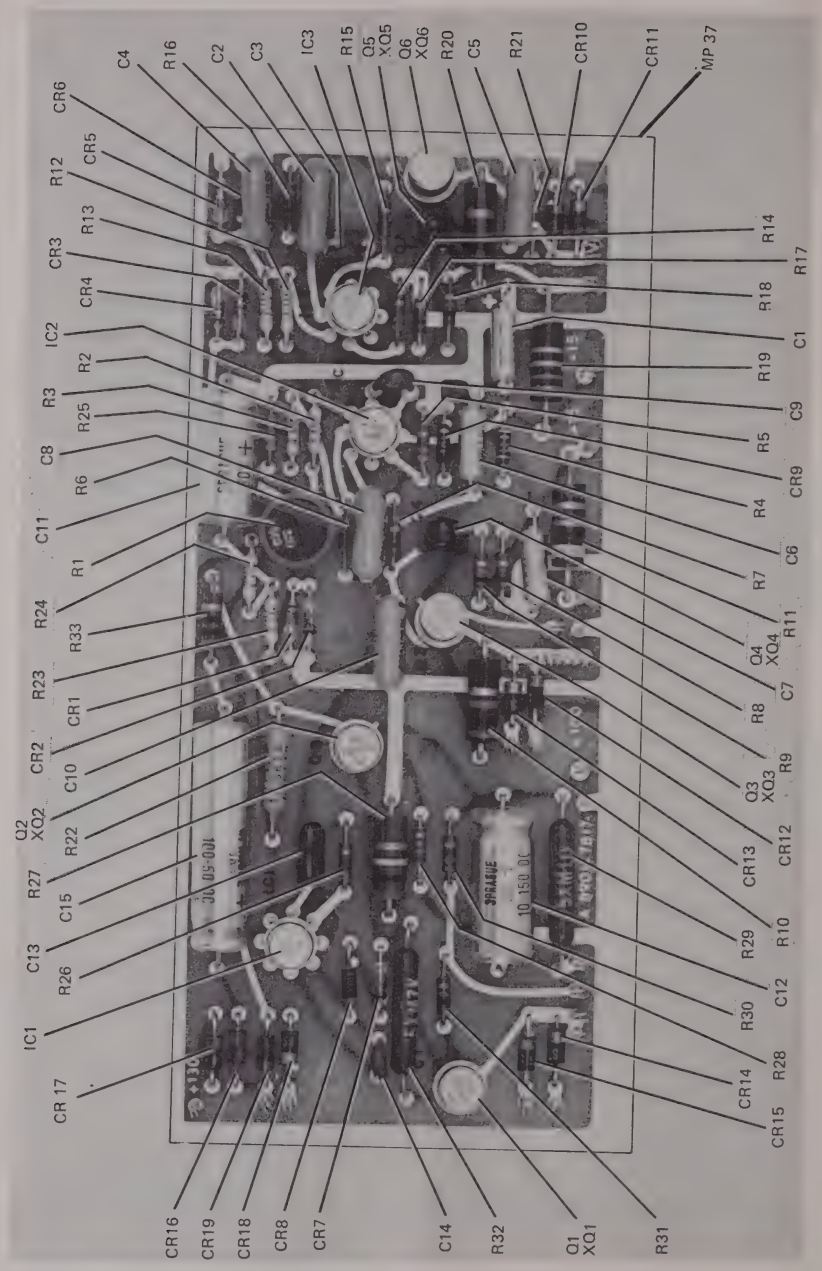

Figure 7-13. Low Voltage Printed Circuit Assembly (A1A2A6A1)

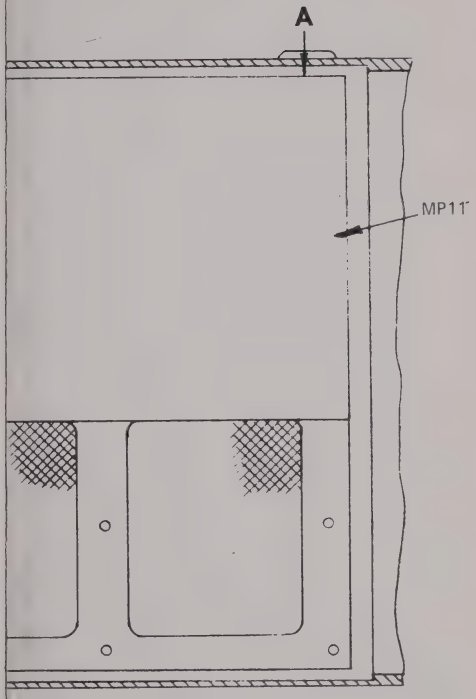

Figure 7-14. Main Frame Cover (A1A3)

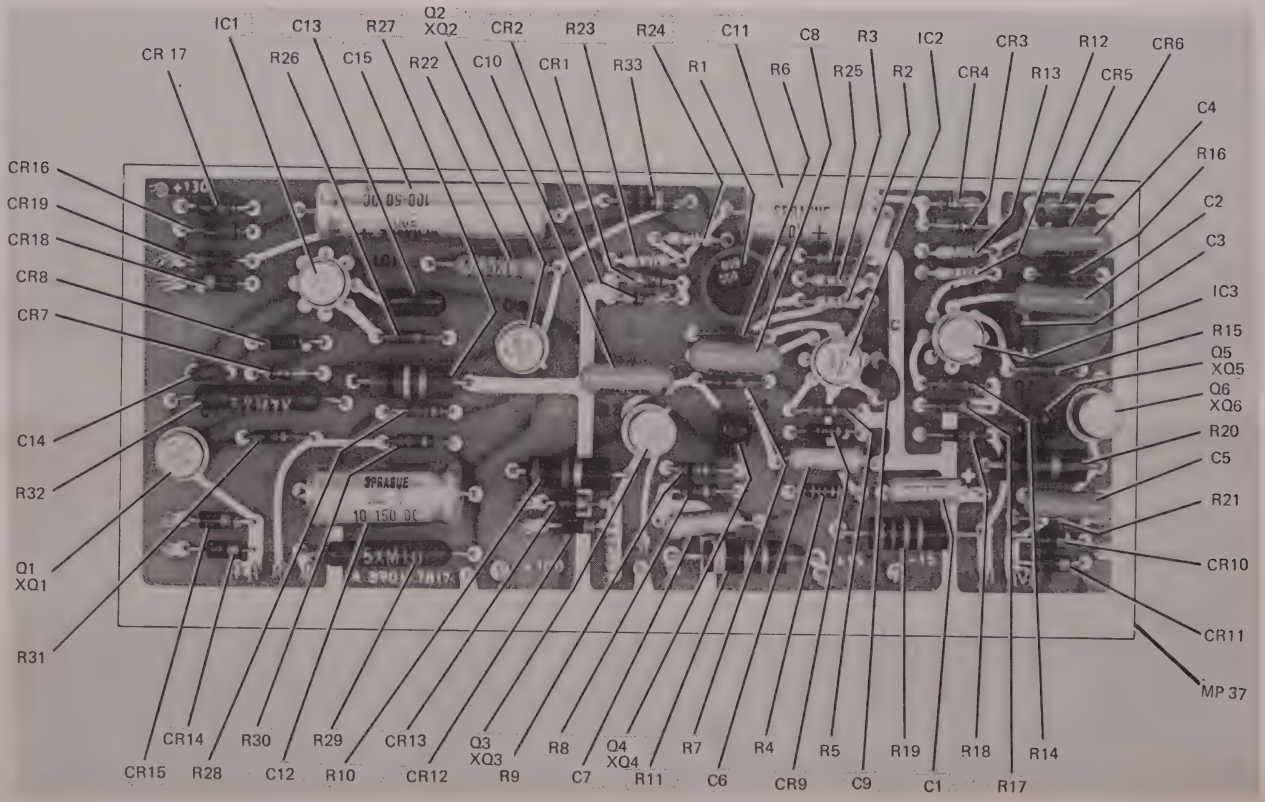

Figure 7-13. Low Voltage Printed Circuit Assembly (A1A2A6A1)

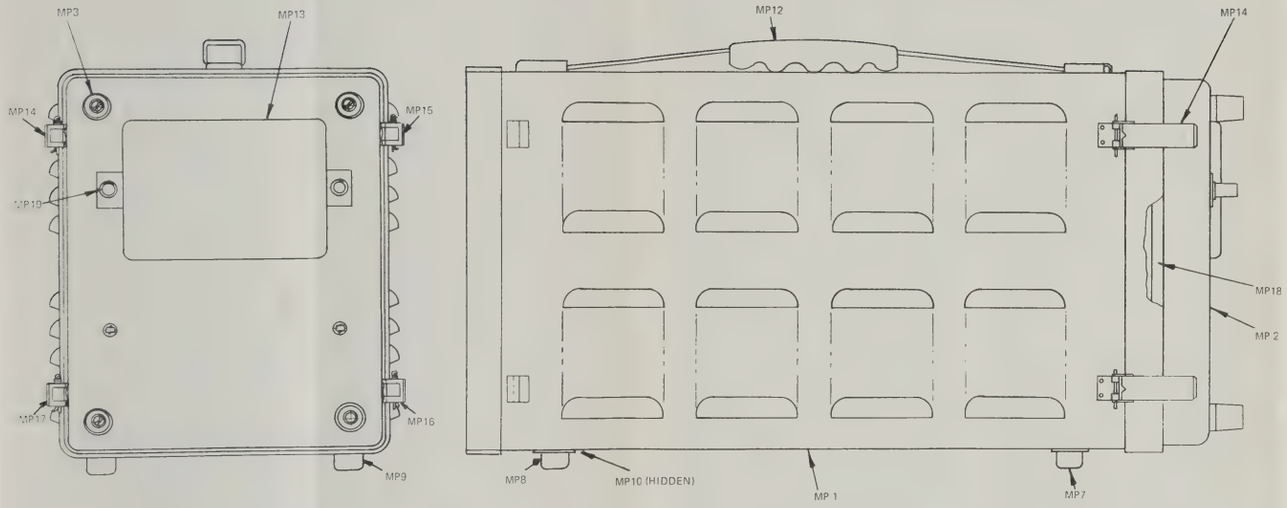

FOR USE ON AN/USM-281D CONFIGURATION ONLY. SEE FIGURE A-22 FOR AN/USM-281E CONFIGURATION.

View A-A

Figure 7-14. Main Frame Cover (A1A3)

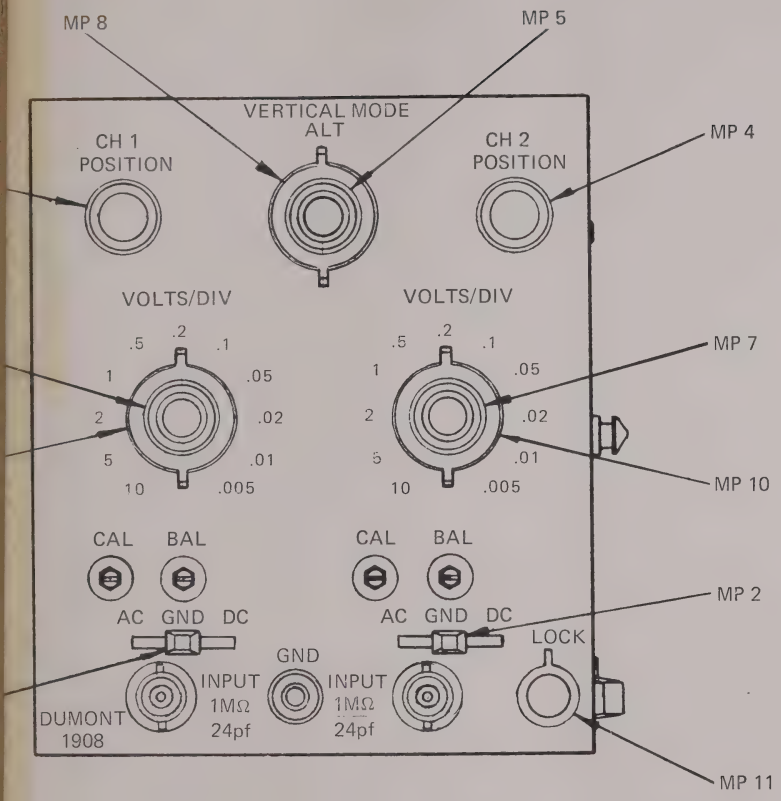

Figure 7-15. Dual Trace Oscilloscope Plug-in Unit (A2) (Sheet 1 of 2)

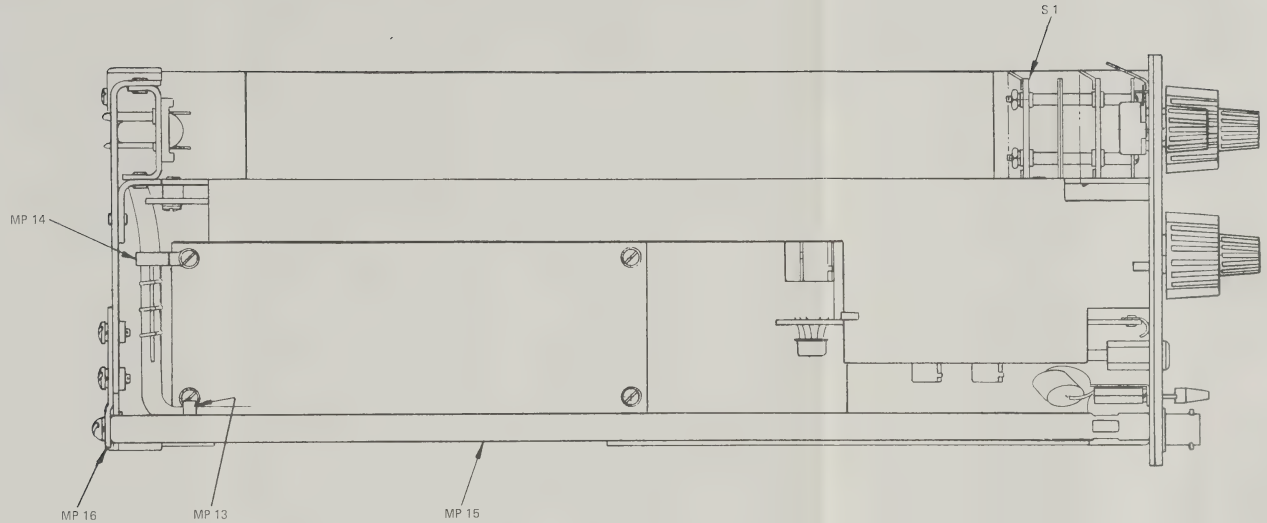

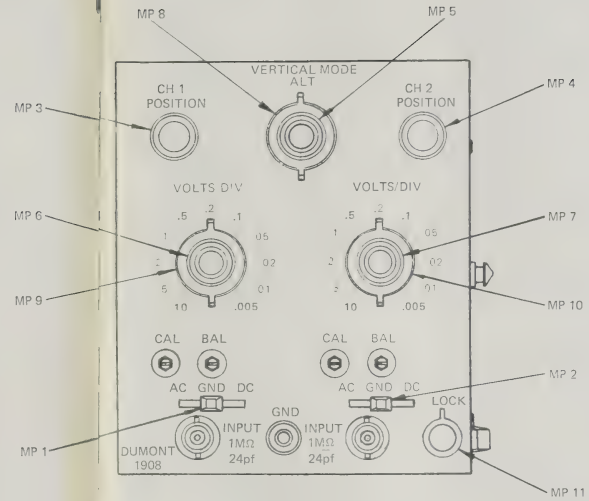

Figure 7-15. Dual Trace Oscilloscope Plug-in Unit (A2) (Sheet 1 of 2)

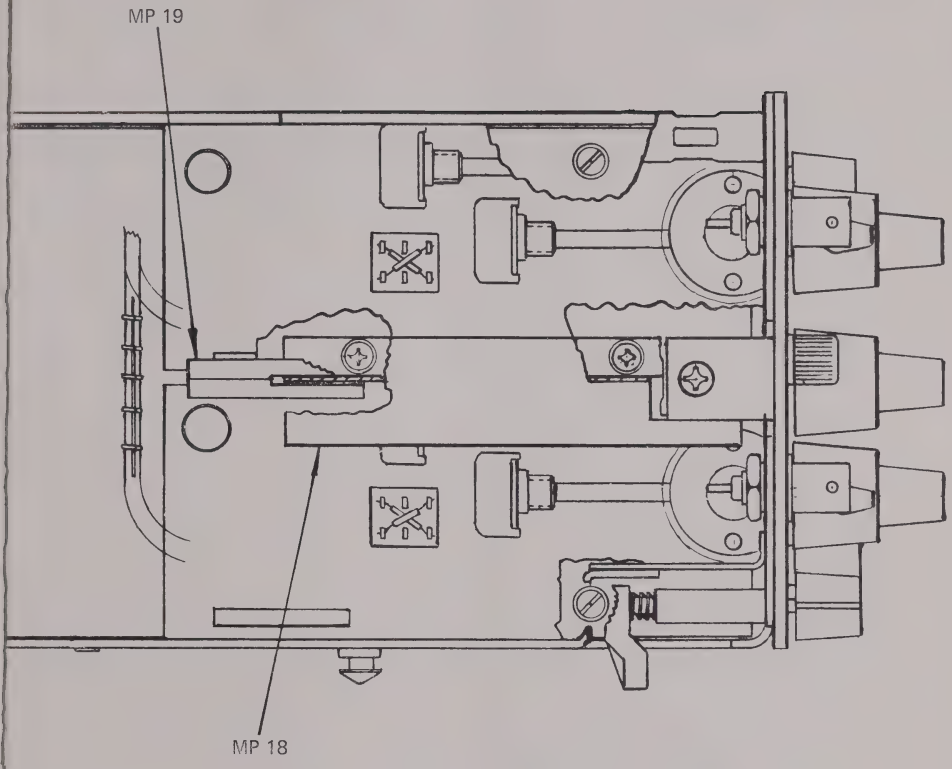

/ B-B
M VIEW)

Figure 7-15. Dual Trace Oscilloscope Plug-in Unit (A2) (Sheet 2 of 2)

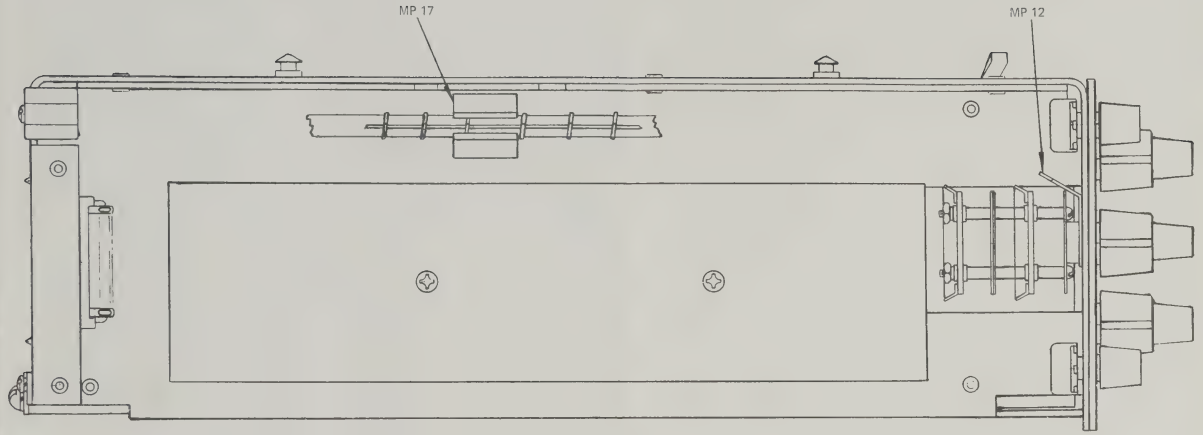

VIEW A-A
(TOP VIEW)

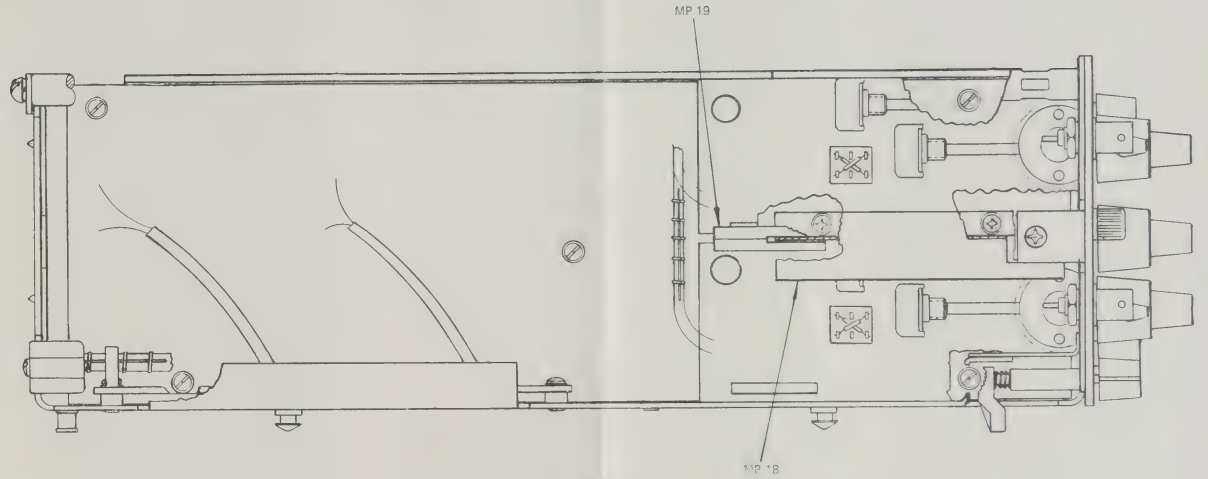

VIEW B-B
(BOTTOM VIEW)

Figure 7-15. Dual Trace Oscilloscope Plug-in Unit (A2) (Sheet 2 of 2)

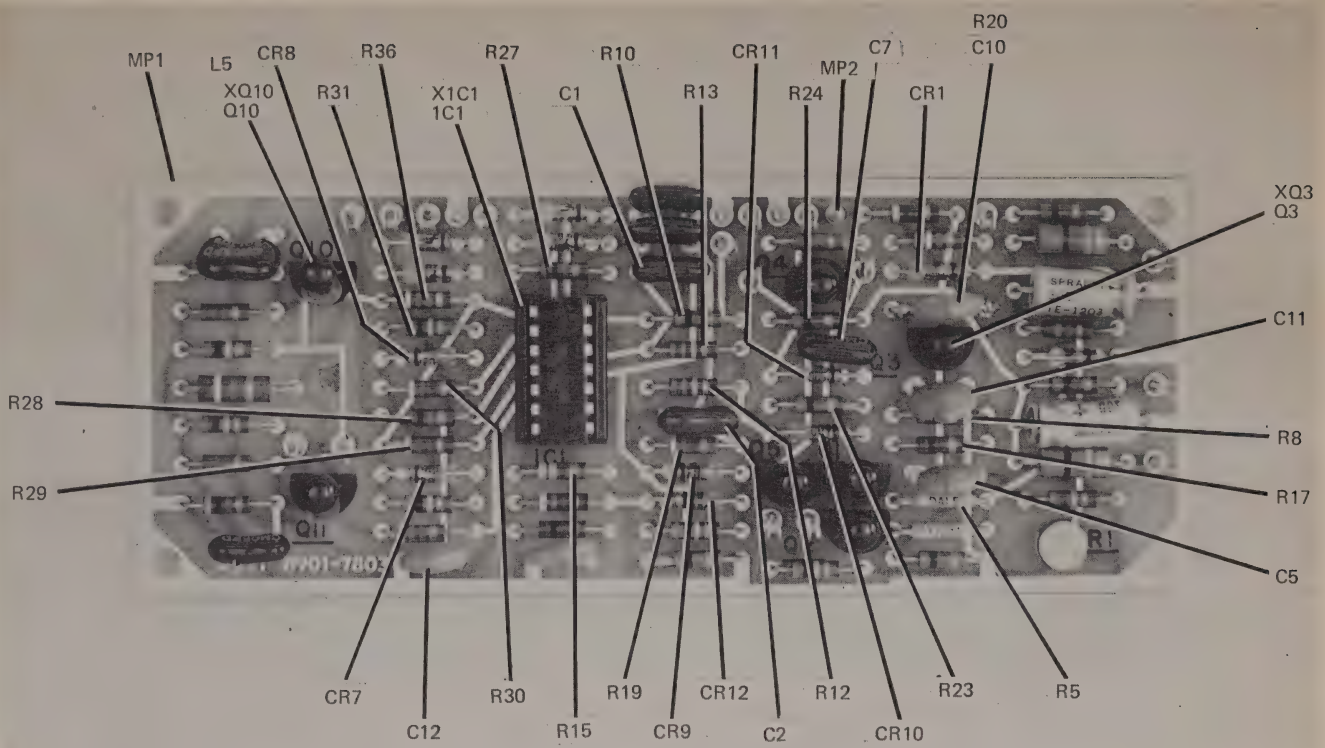

INSULATING BEAD,30669 part no.7404-1020,IS USED ONLY FOR MANUFACTURING AND NOT FOR REPAIR.

Figure 7-16. Logic Printed Circuit Assembly
(A2A3) (Sheet 1 of 2)

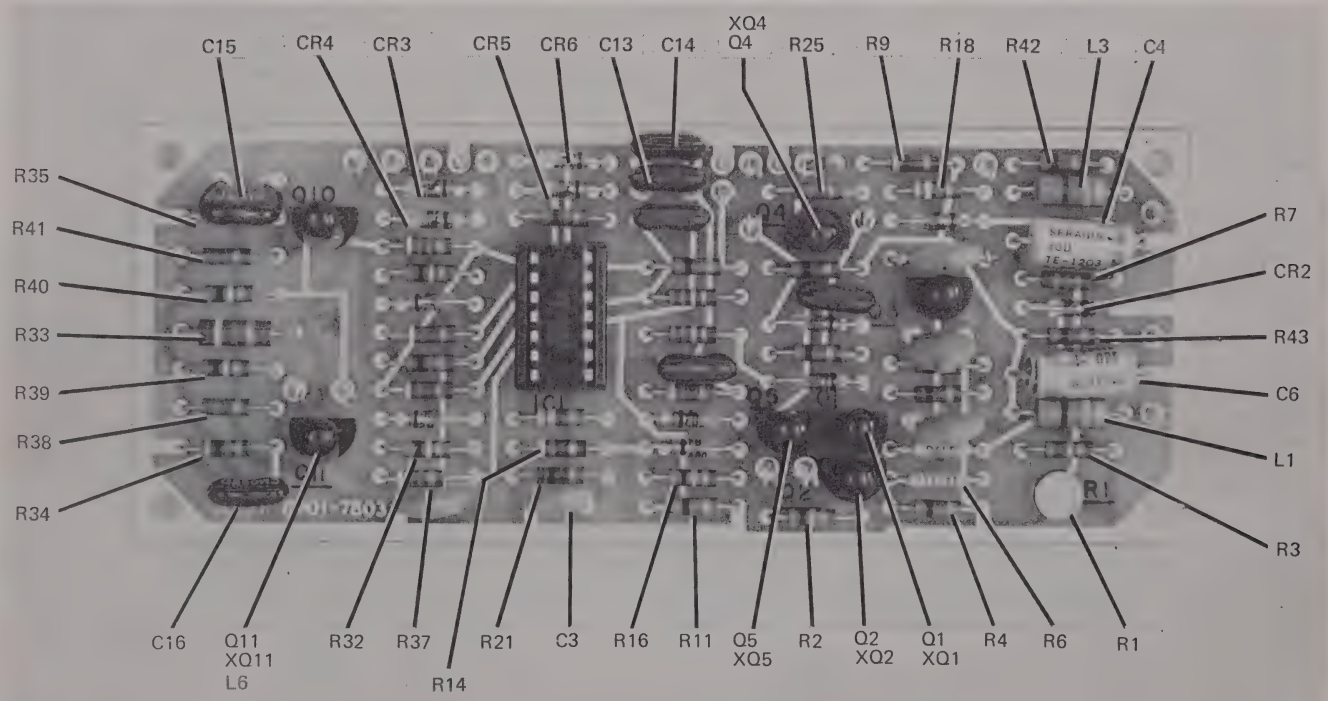

INSULATING BEAD,30669 part no.7404-1020,IS USED ONLY FOR MANUFACTURING AND NOT FOR REPAIR.

Figure 7-16. Logic Printed Circuit Assembly

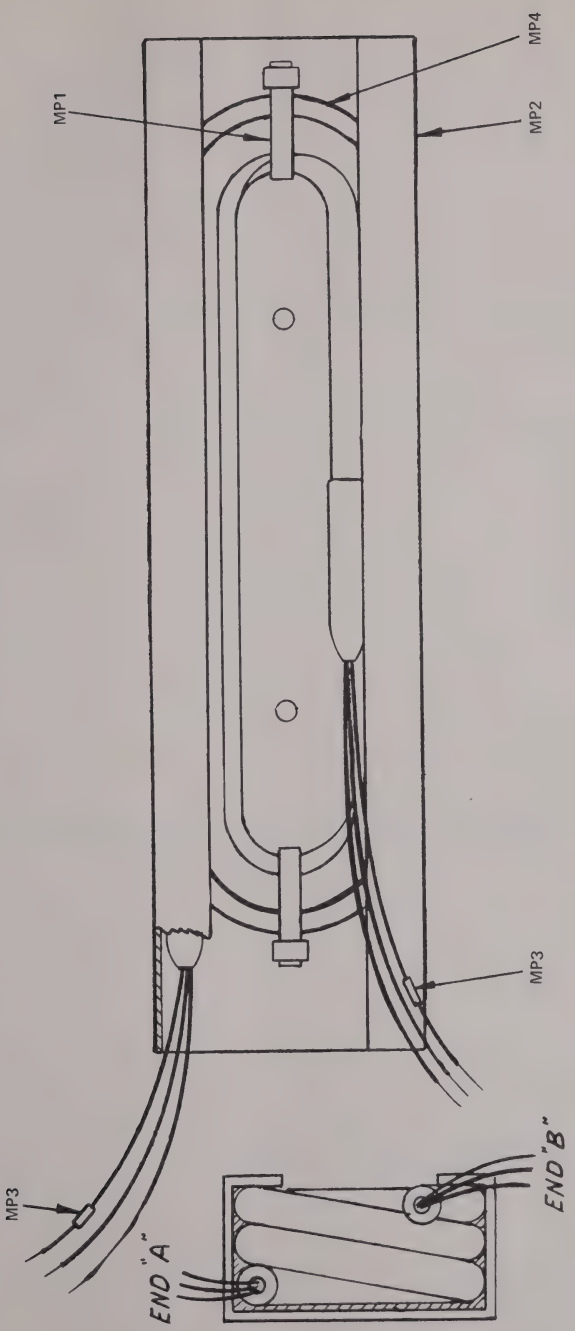

Figure 7-17. Delay Line Assembly (A2A4)

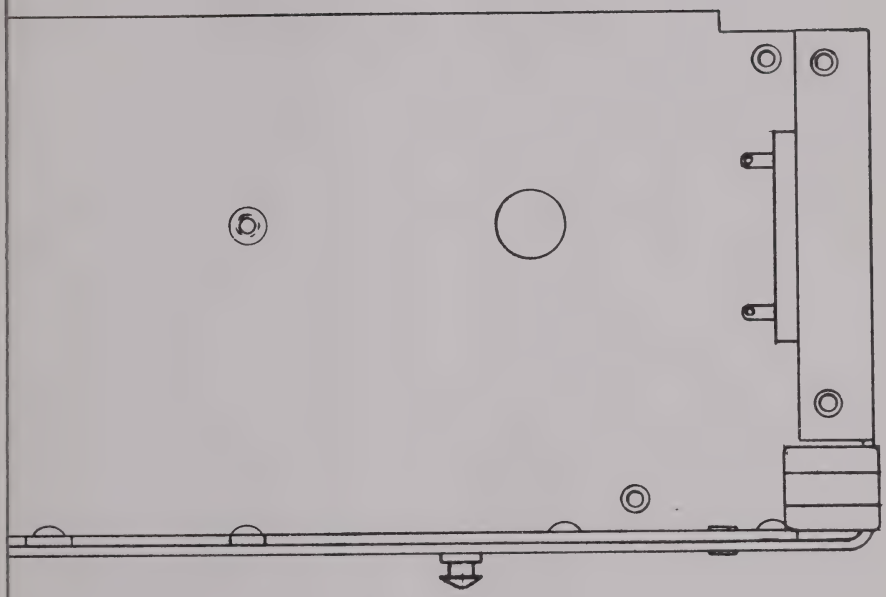

Figure 7-18. Vertical Section Panel Assembly (A2A5) (Sheet 1 of 2)

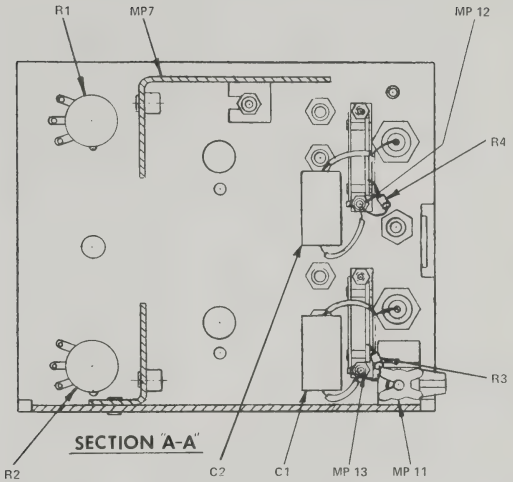

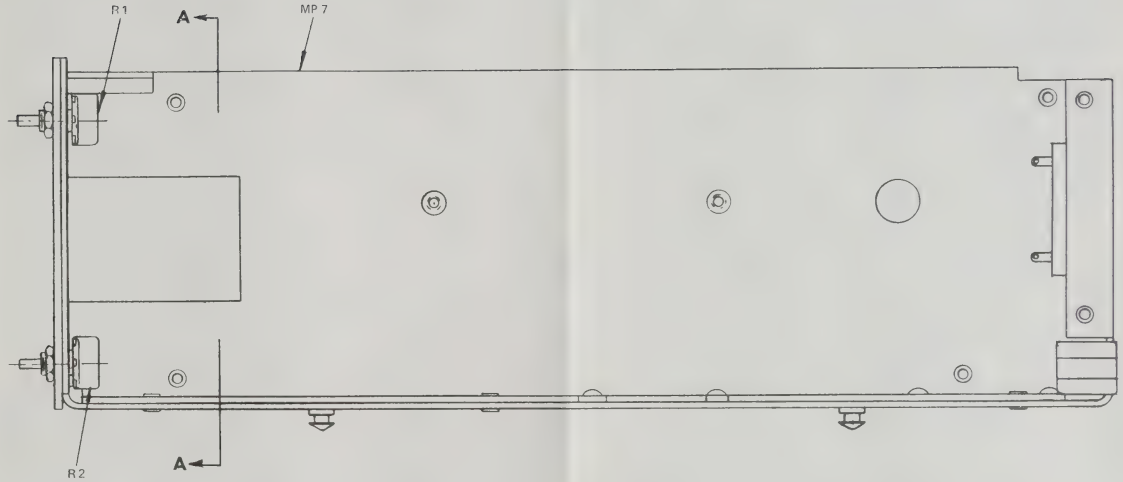

Figure 7-18. Vertical Section Panel Assembly (A2A5) (Sheet 1 of 2)

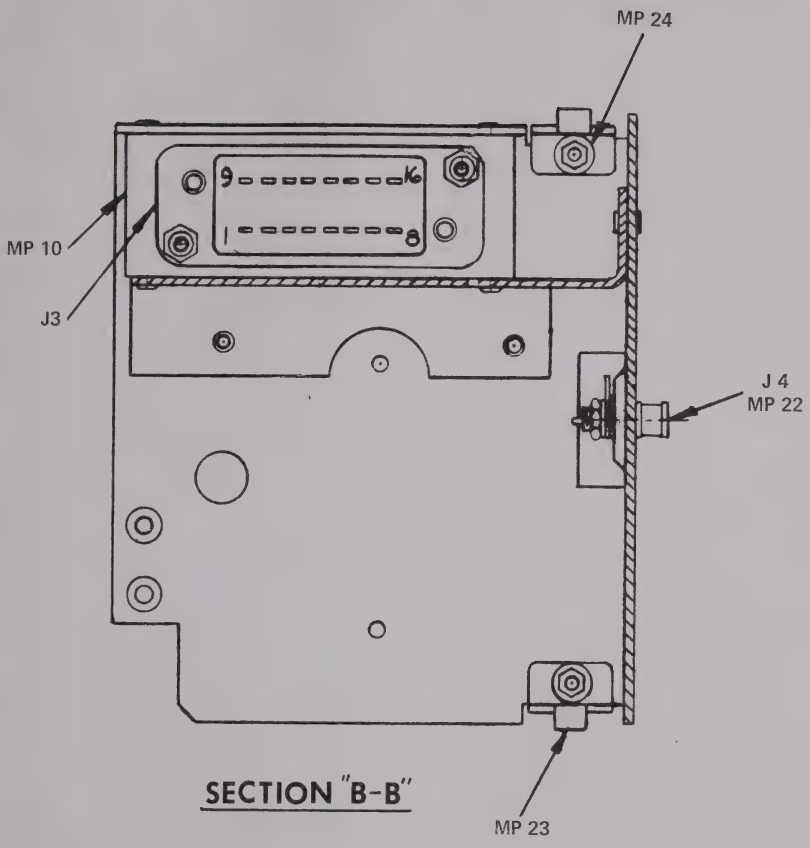

Figure 7-18. Vertical Section Panel Assembly (A2A5) (Sheet 2 of 2)

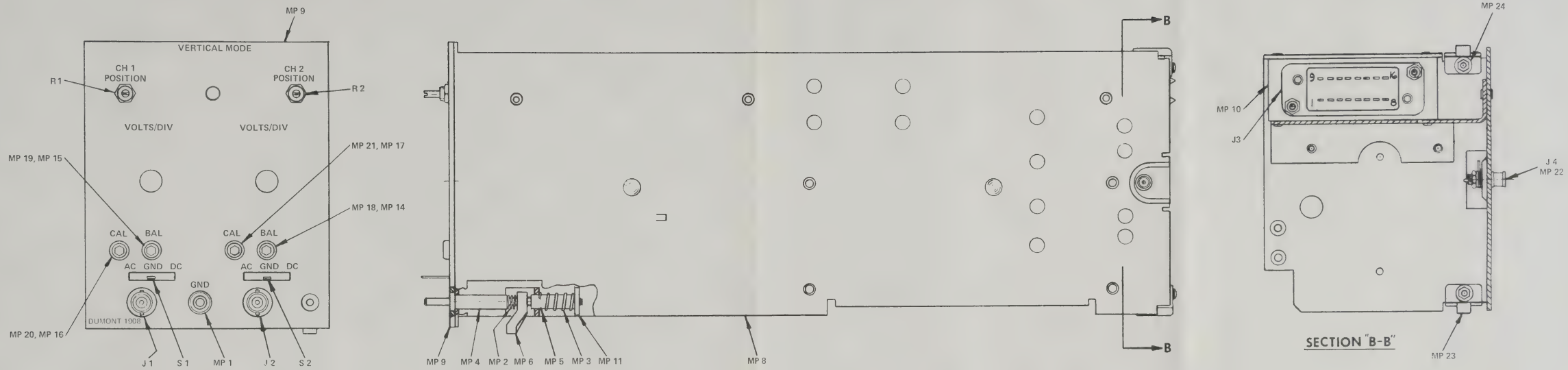

Figure 7-18. Vertical Section Panel Assembly (A2A5) (Sheet 2 of 2)

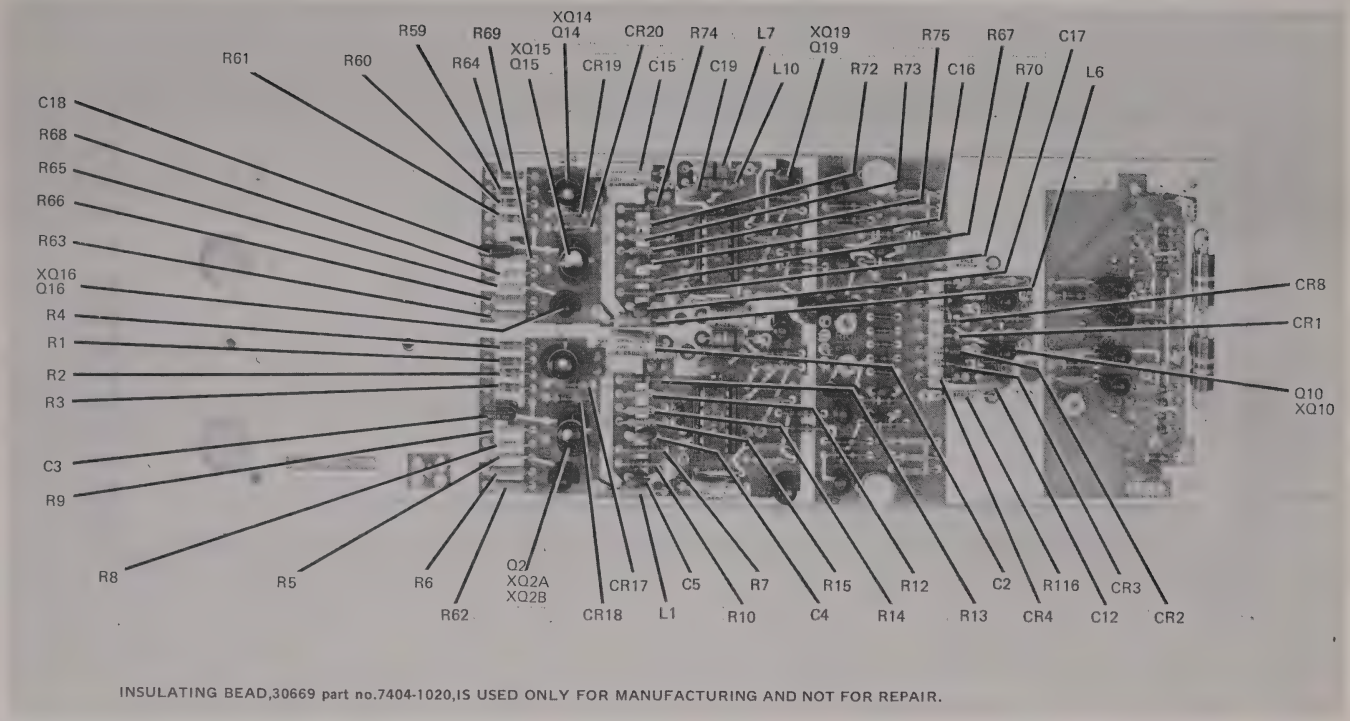

Figure 7-19. Vertical Pre-Amplifier
(A2A6) (Sheet 1 of 3)

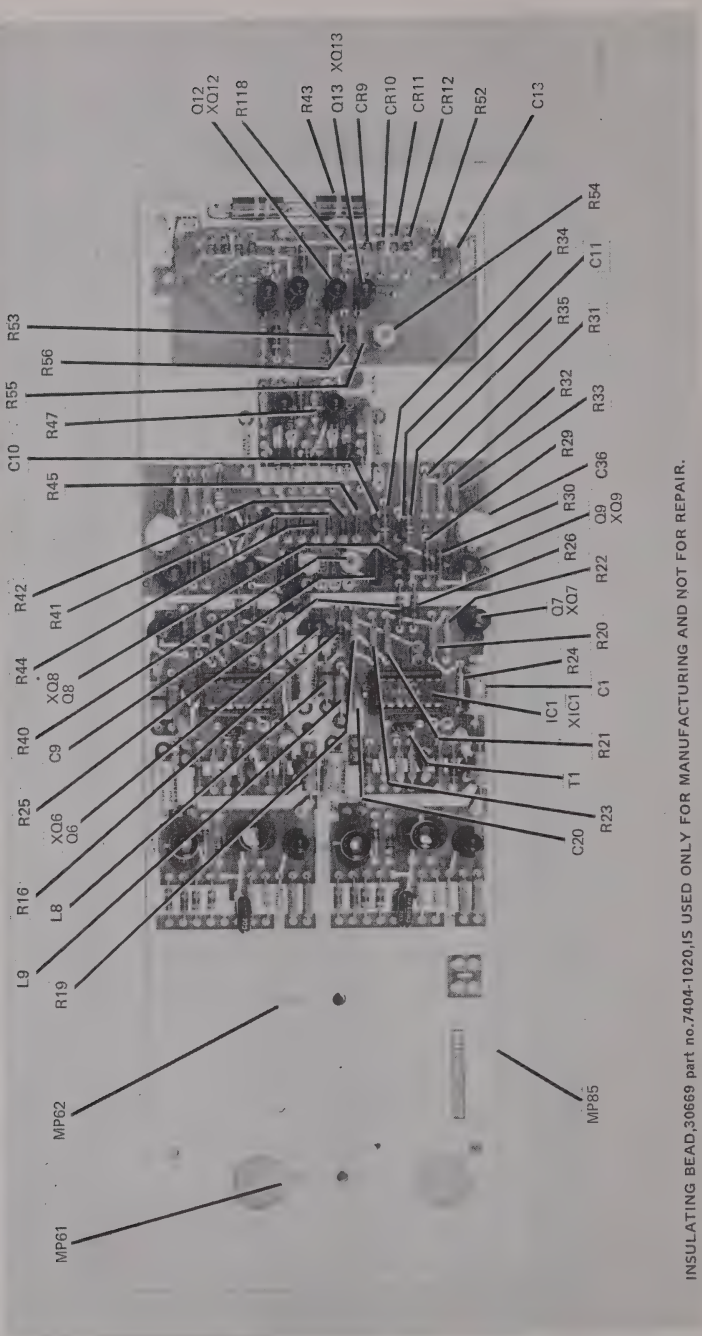

Figure 7-19. Vertical Pre-Amplifier
(A2A6) (Sheet 2 of 3)

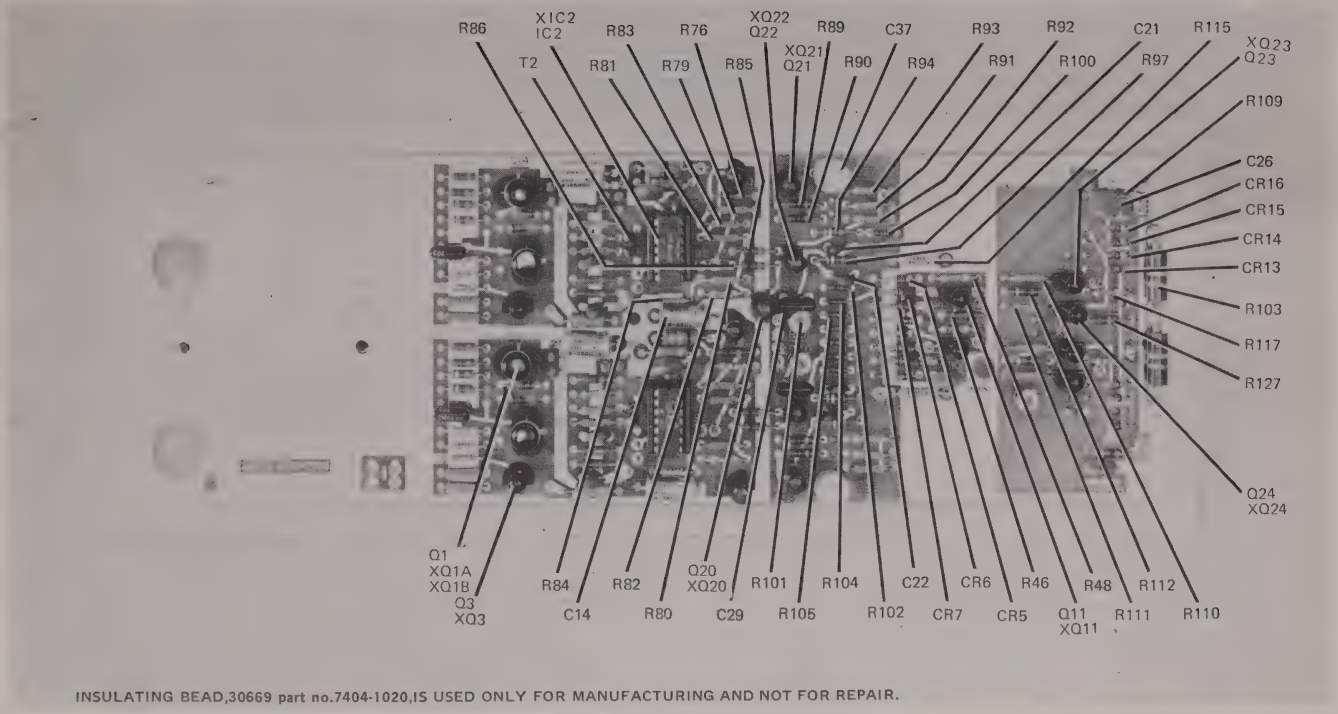

Figure 7-19. Vertical Pre-Amplifier (A2A6)
(Sheet 3 of 3)

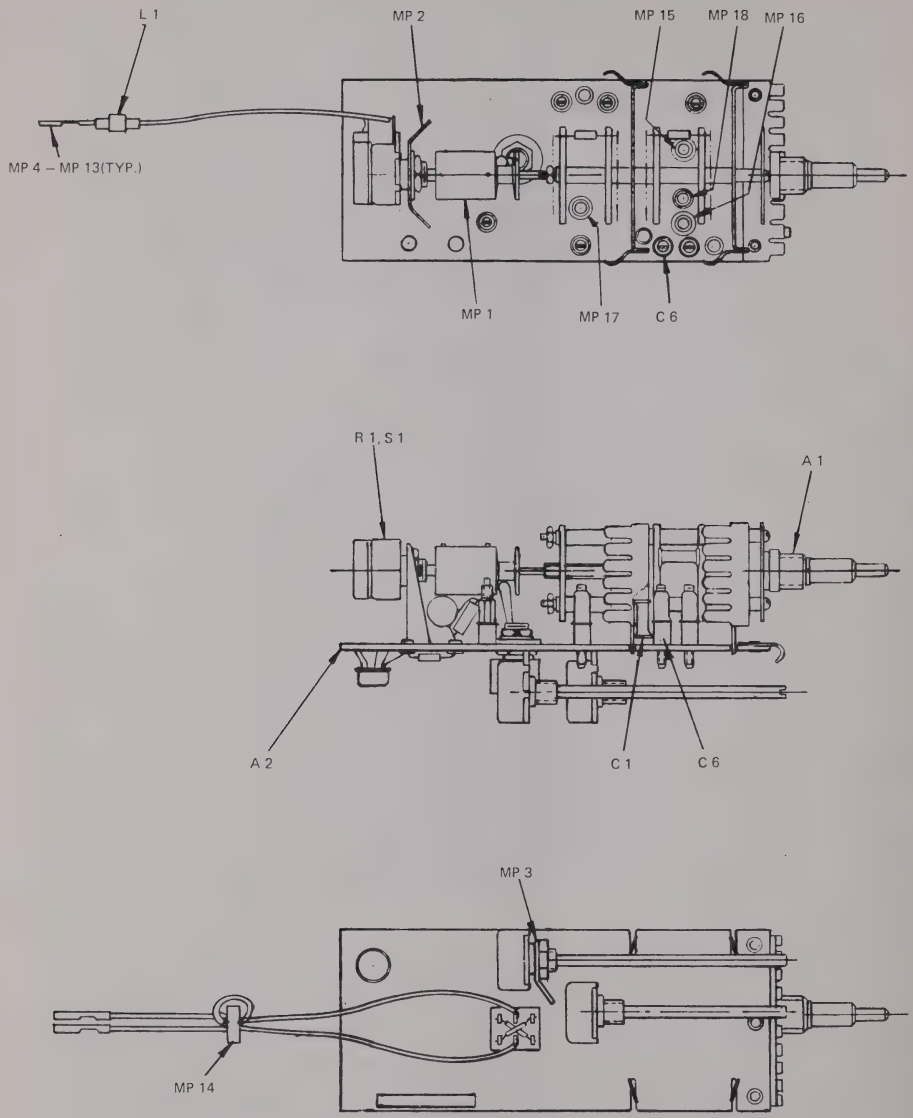

Figure 7-20. Vertical Attenuator Assembly (A2A7)

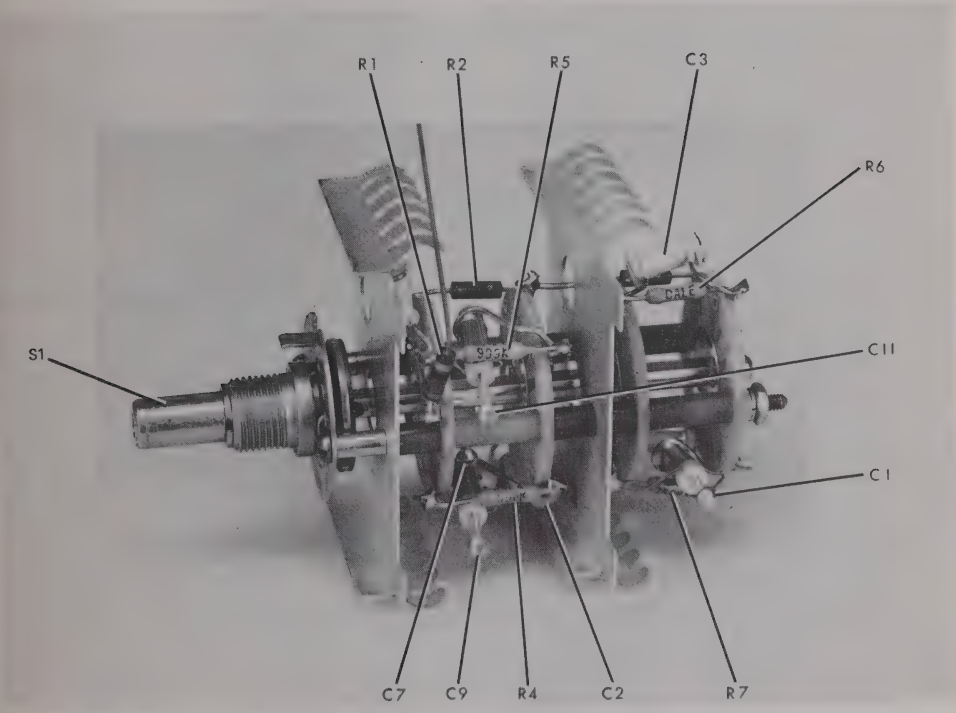

Figure 7-21. Attenuator Switch Assembly (A2A7A1) (Sheet 1 of 2)

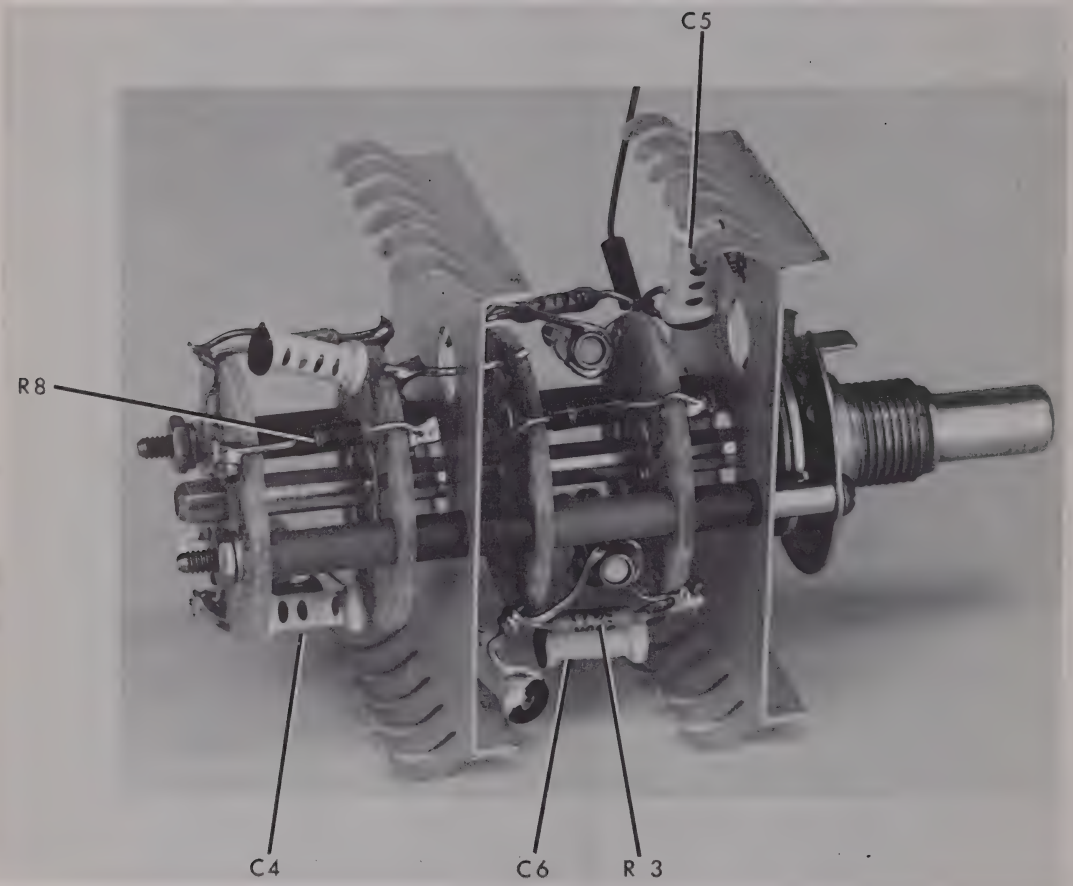

Figure 7-21. Attenuator Switch Assembly (A2A7A1) (Sheet 2 of 2)

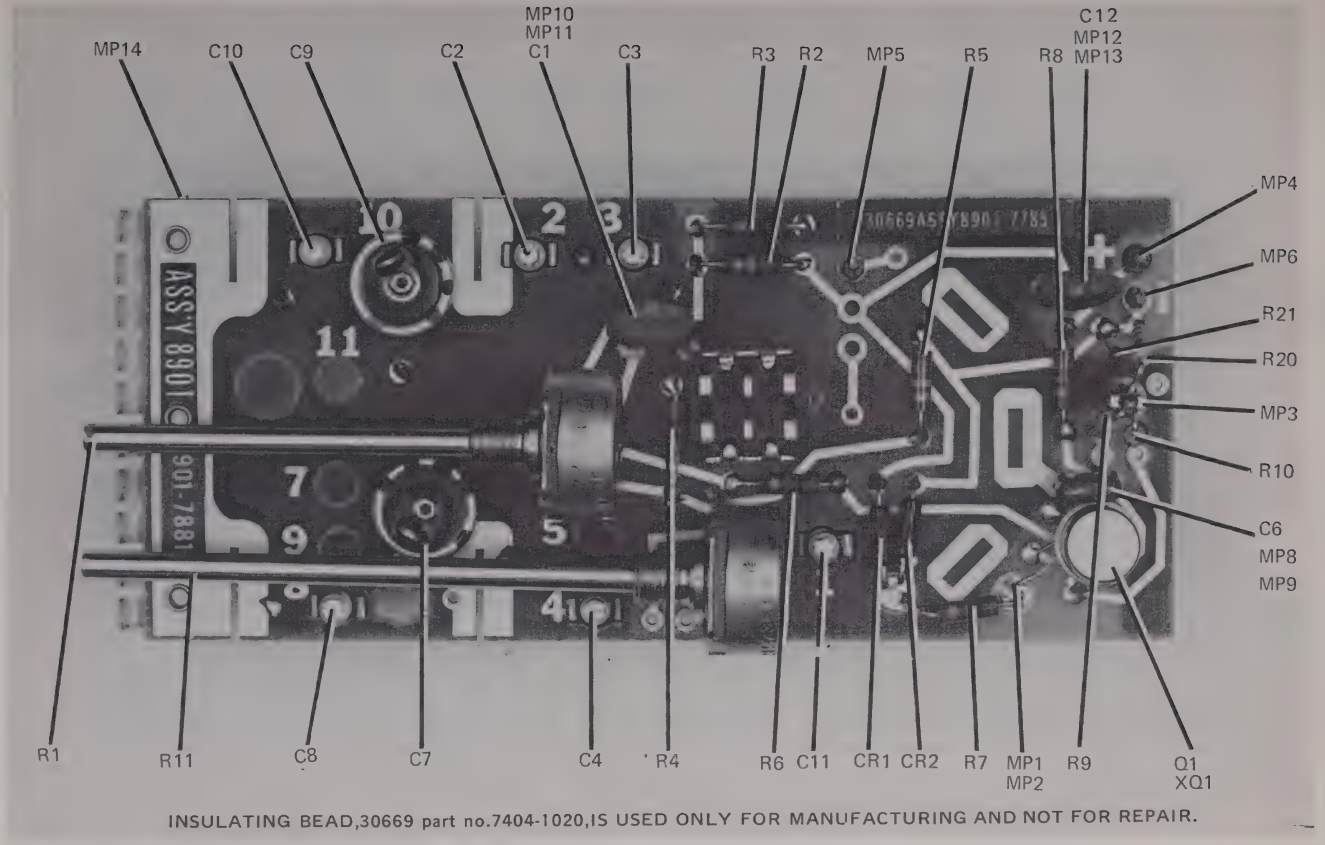

Figure 7-22. Attenuator Printed Circuit Assembly (A2A7A2) (Sheet 1 of 2)

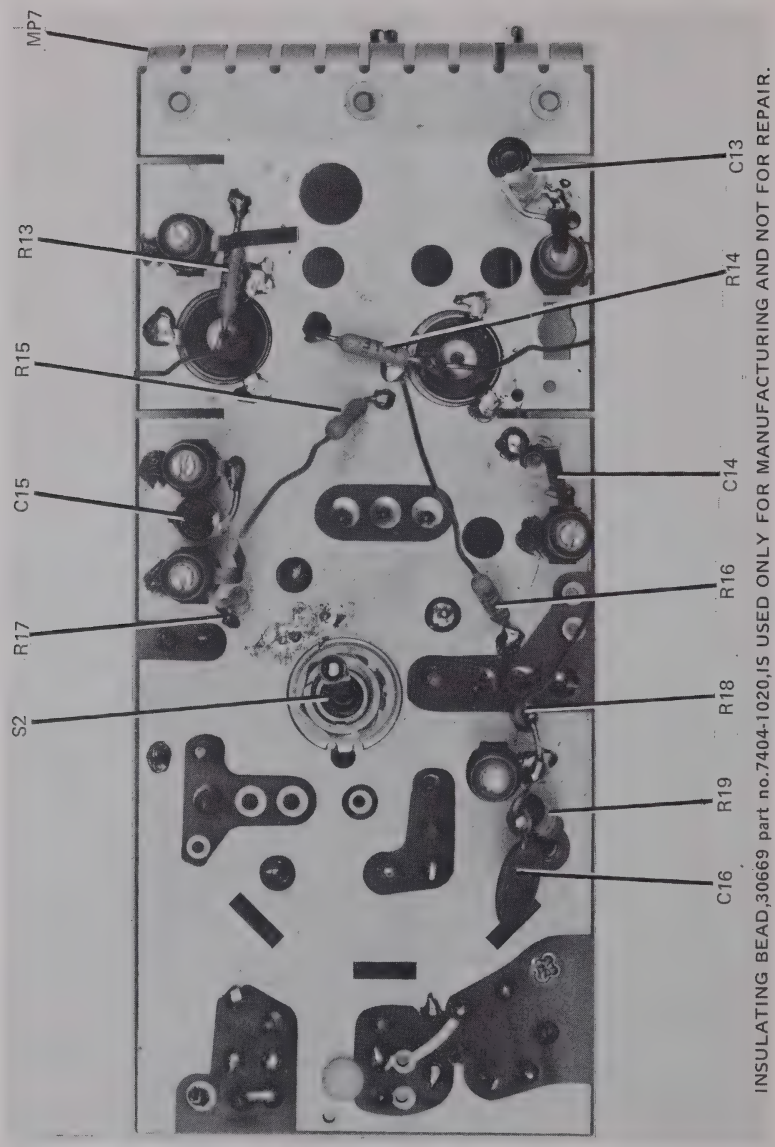

Figure 7-22. Attenuator Printed Circuit Assembly (A2A7A2) (Sheet 2 of 2)

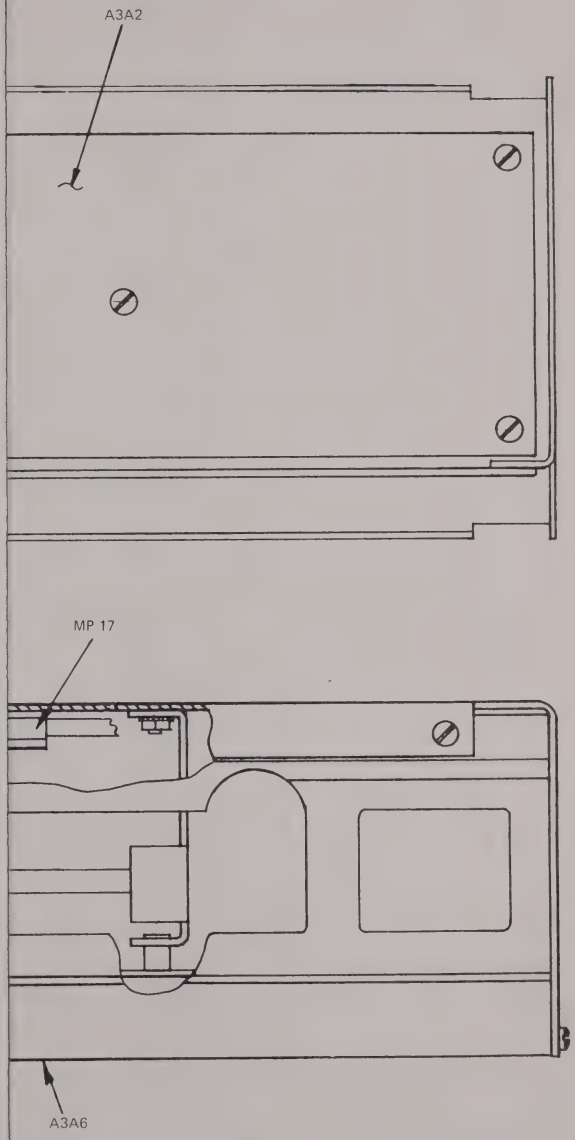

Figure 7-23. Time Base Delay Oscilloscope Plug-in Unit (A3)(Sheet 1 of 2)

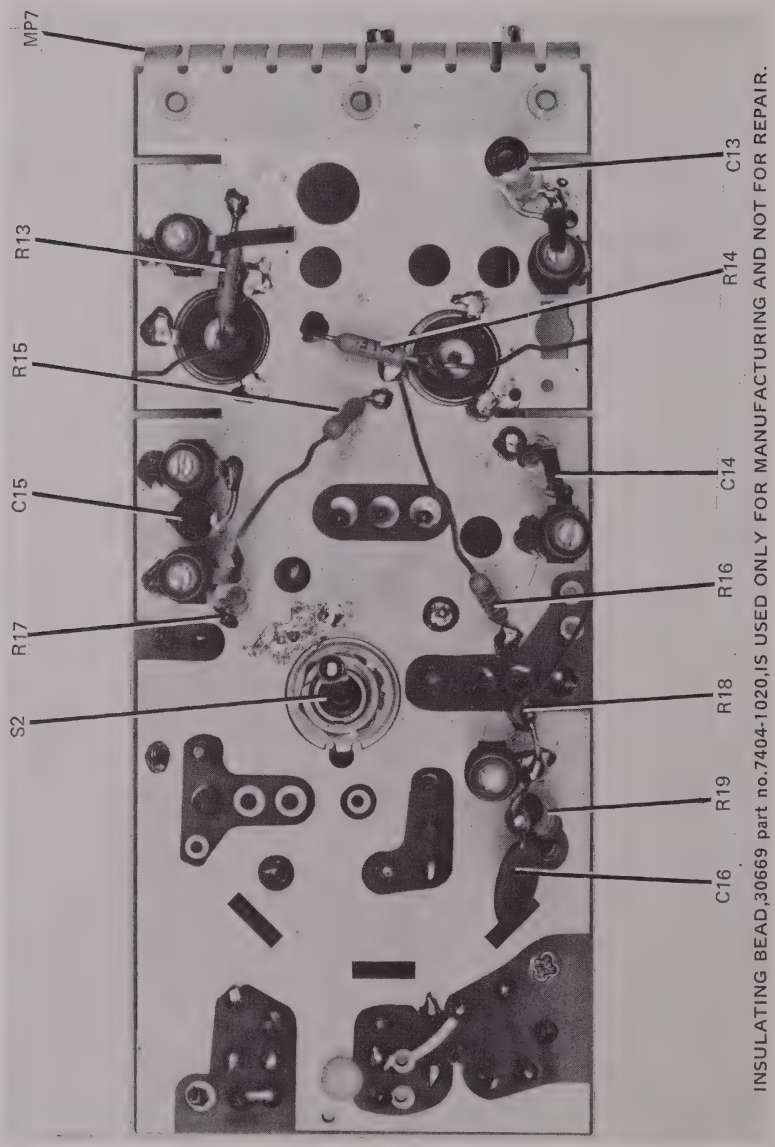

Figure 7-22. Attenuator Printed Circuit Assembly (A2A7A2) (Sheet 2 of 2)

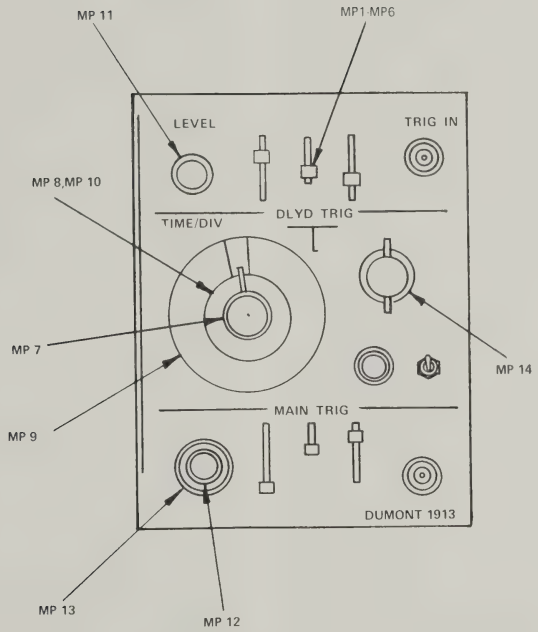

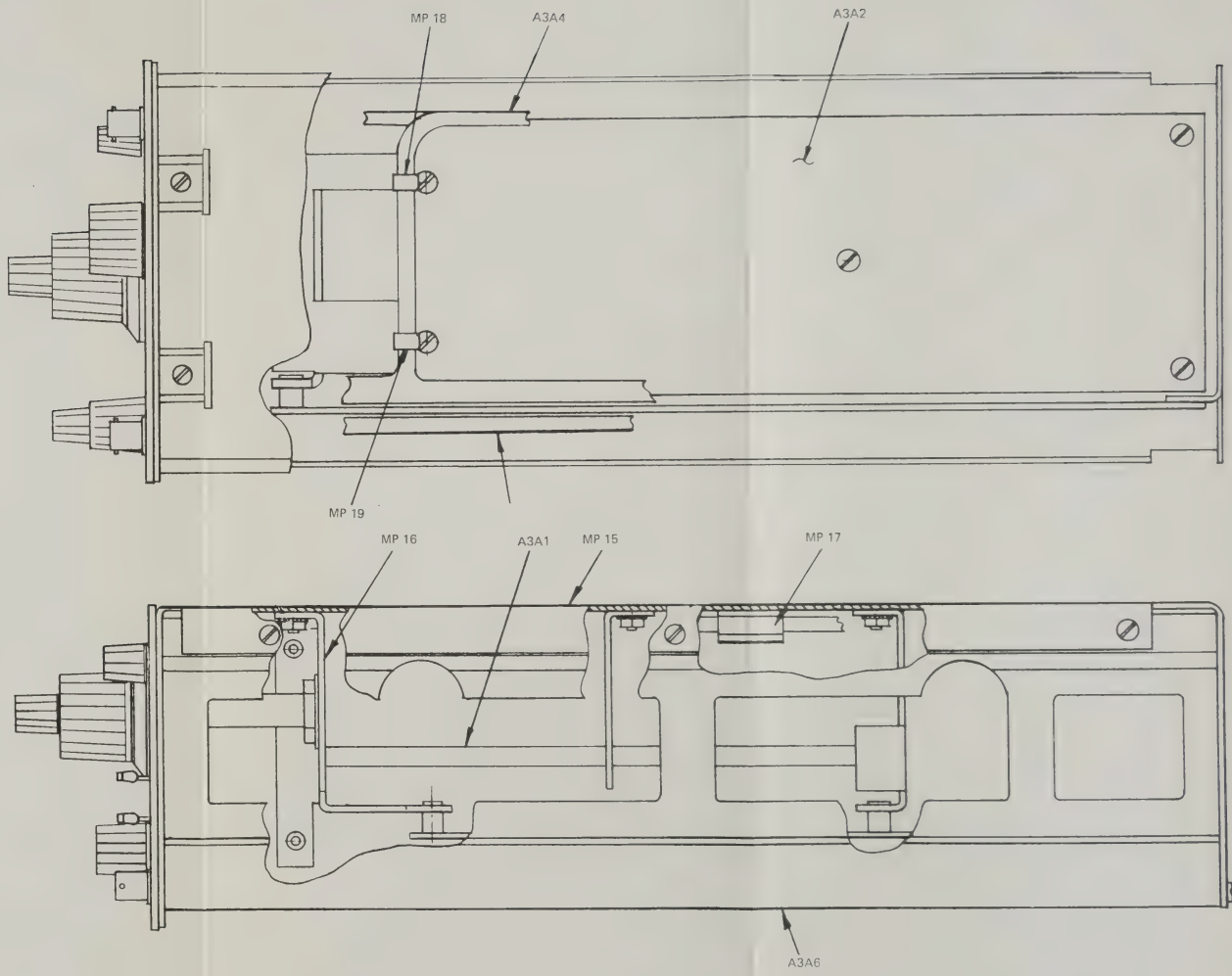

Figure 7-23. Time Base Delay Oscilloscope Plug-in Unit (A3) (Sheet 1 of 2)

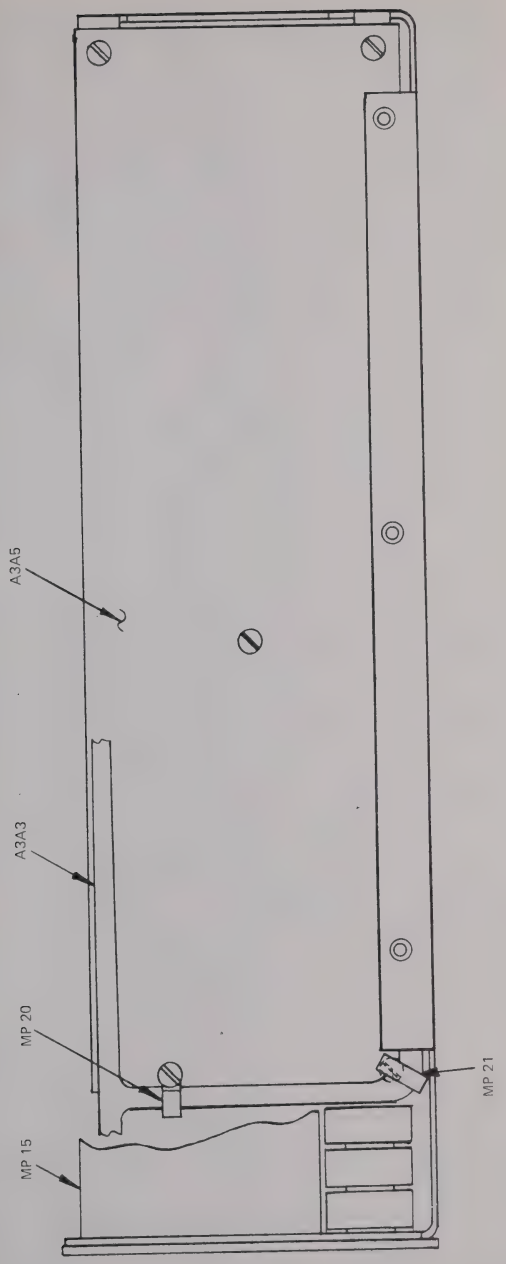

Figure 7-23. Time Base Delay Oscilloscope Plug-in Unit (A3) (Sheet 2 of 2)

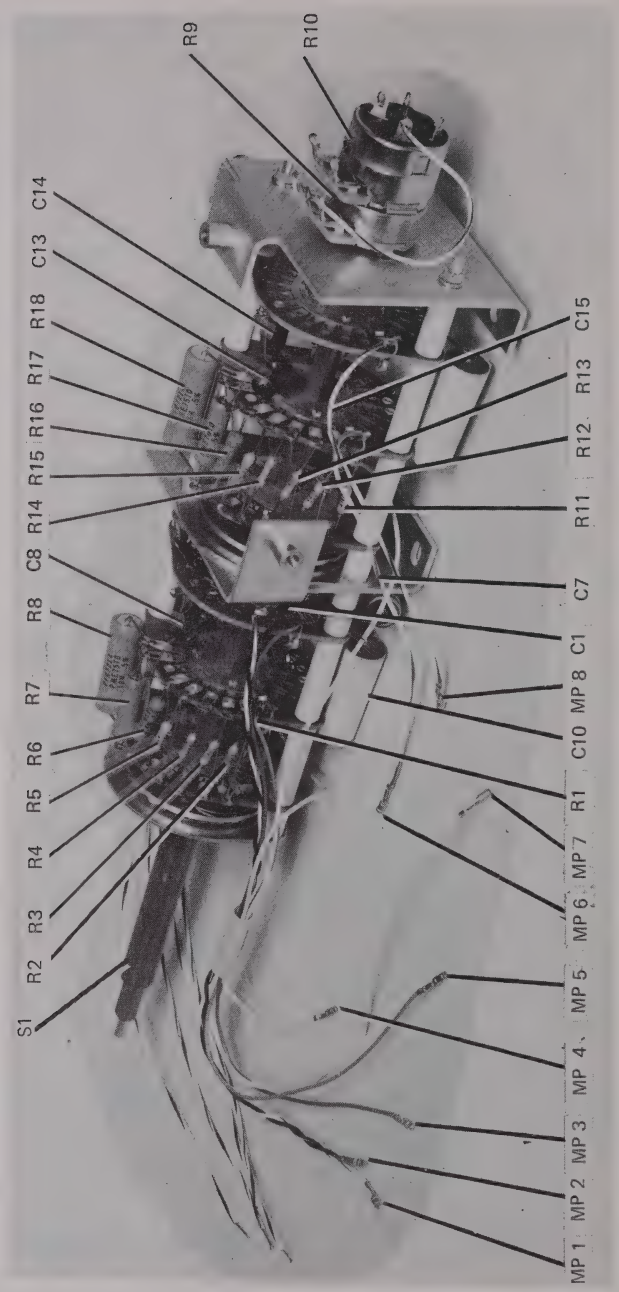

Figure 7- 24. Time Switch Assembly (A3 A1)
(Sheet 1 of 2)

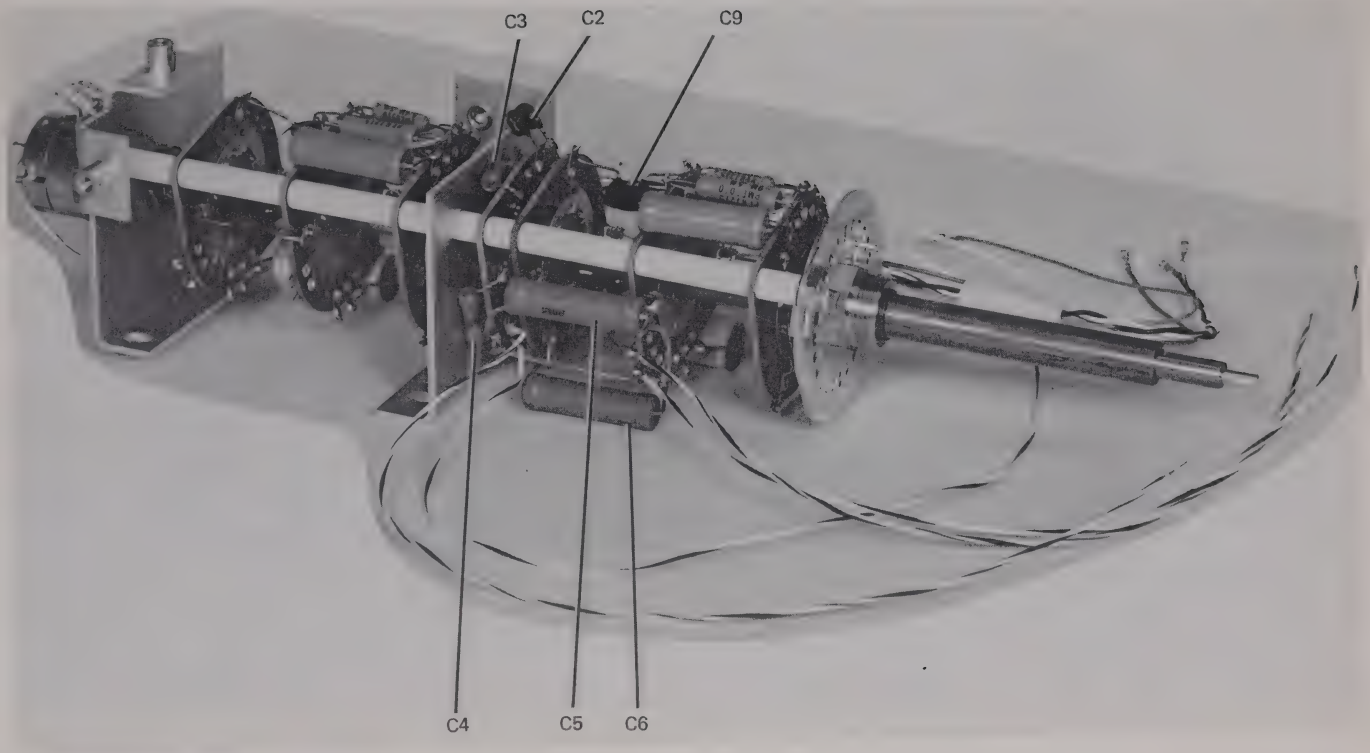

Figure 7- 24. Time Switch Assembly (A3 A1)
(Sheet 2 of 2)

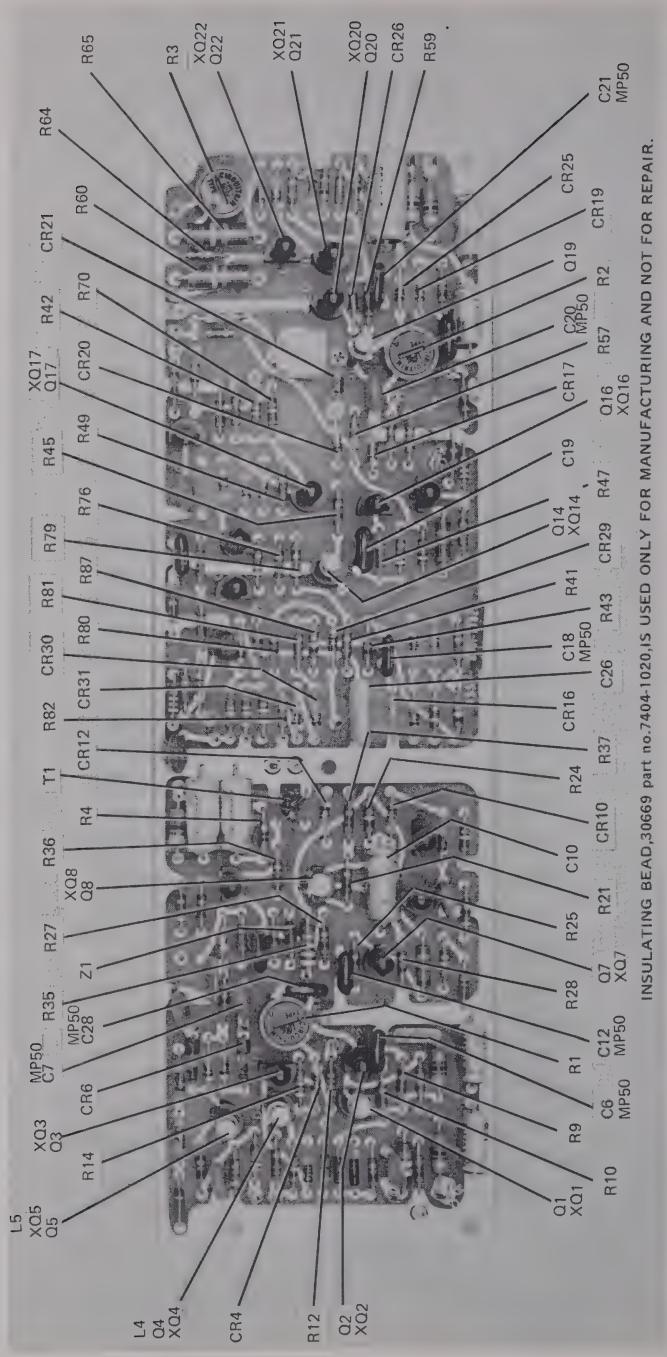

Figure 7-25. Main Sweep Assembly (A3A2)
(Sheet 1 of 3)

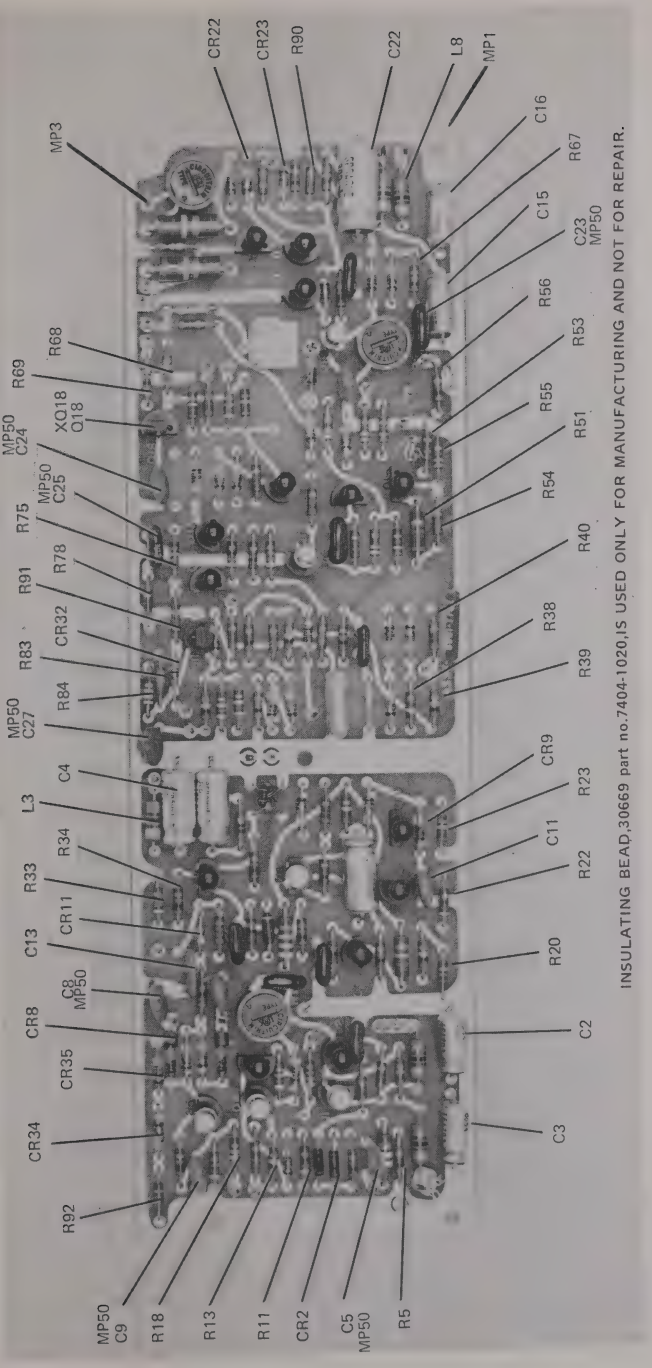

Figure 7-25. Main Sweep Assembly (A3A2)
(Sheet 2 of 3)

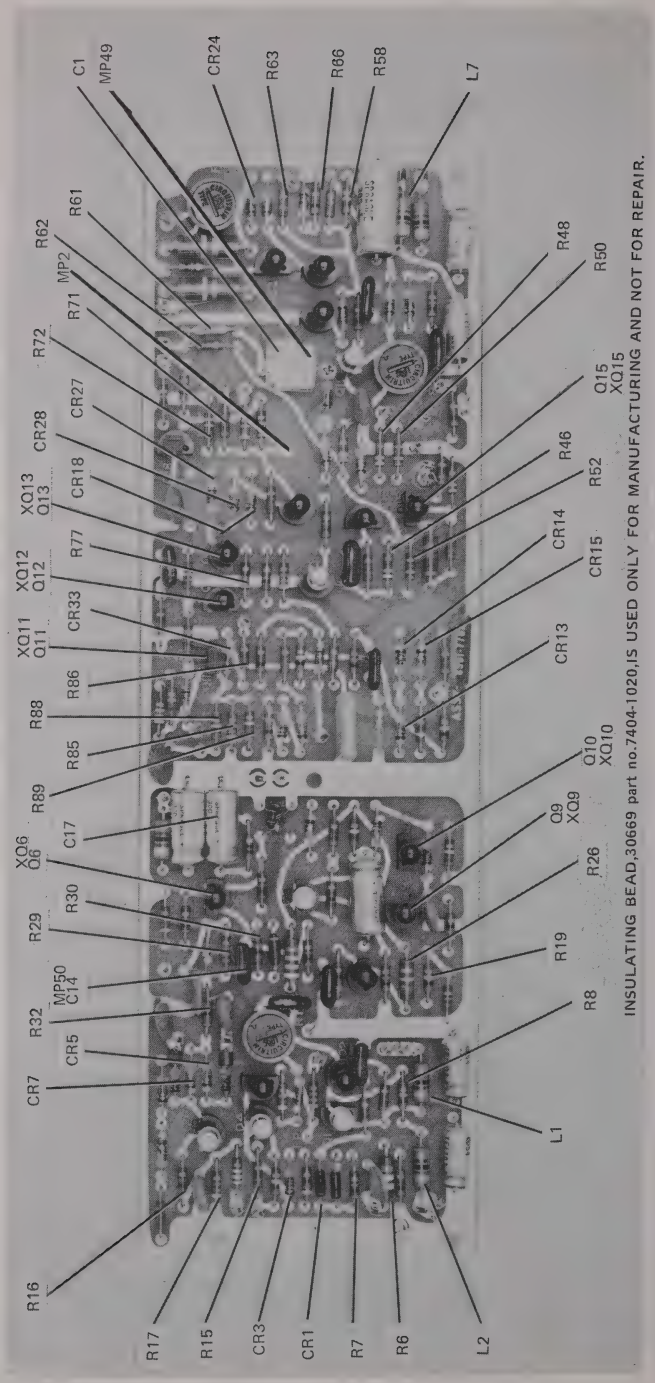

Figure 7-25. Main Sweep Assembly (A3A2)
(Sheet 3 of 3)

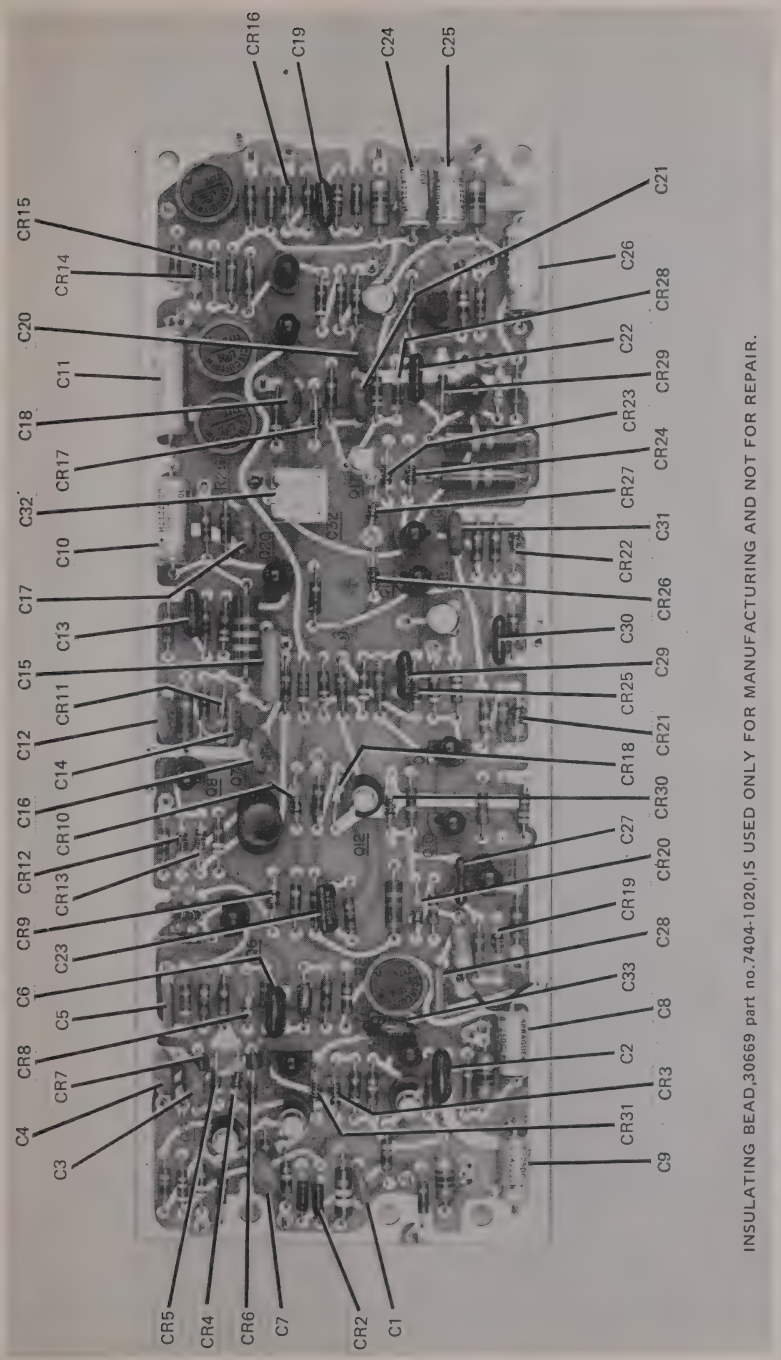

Figure 7-26. Delayed Sweep Assembly (A3A5)
(Sheet 1 of 3)

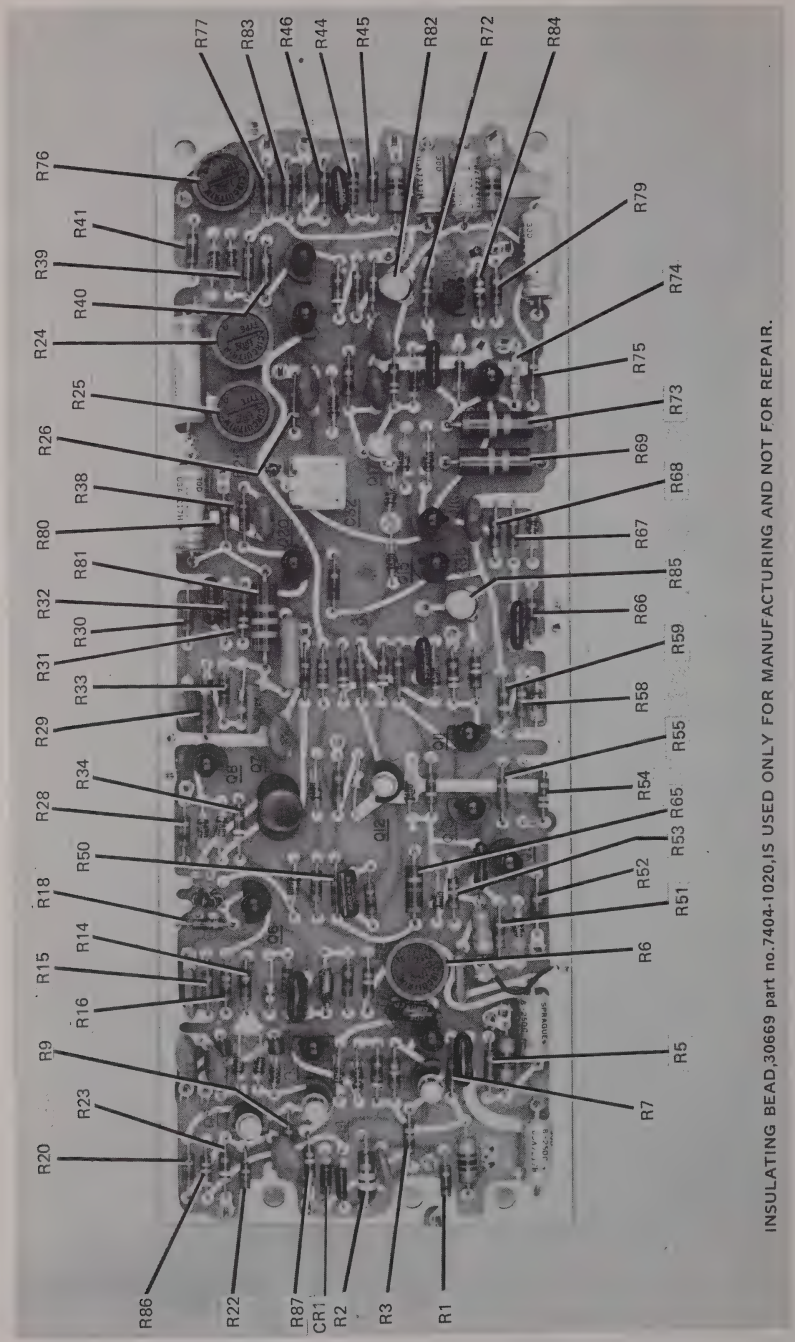

Figure 7-26 Delayed Sweep Assembly (A3A5)
(Sheet 2 of 3)

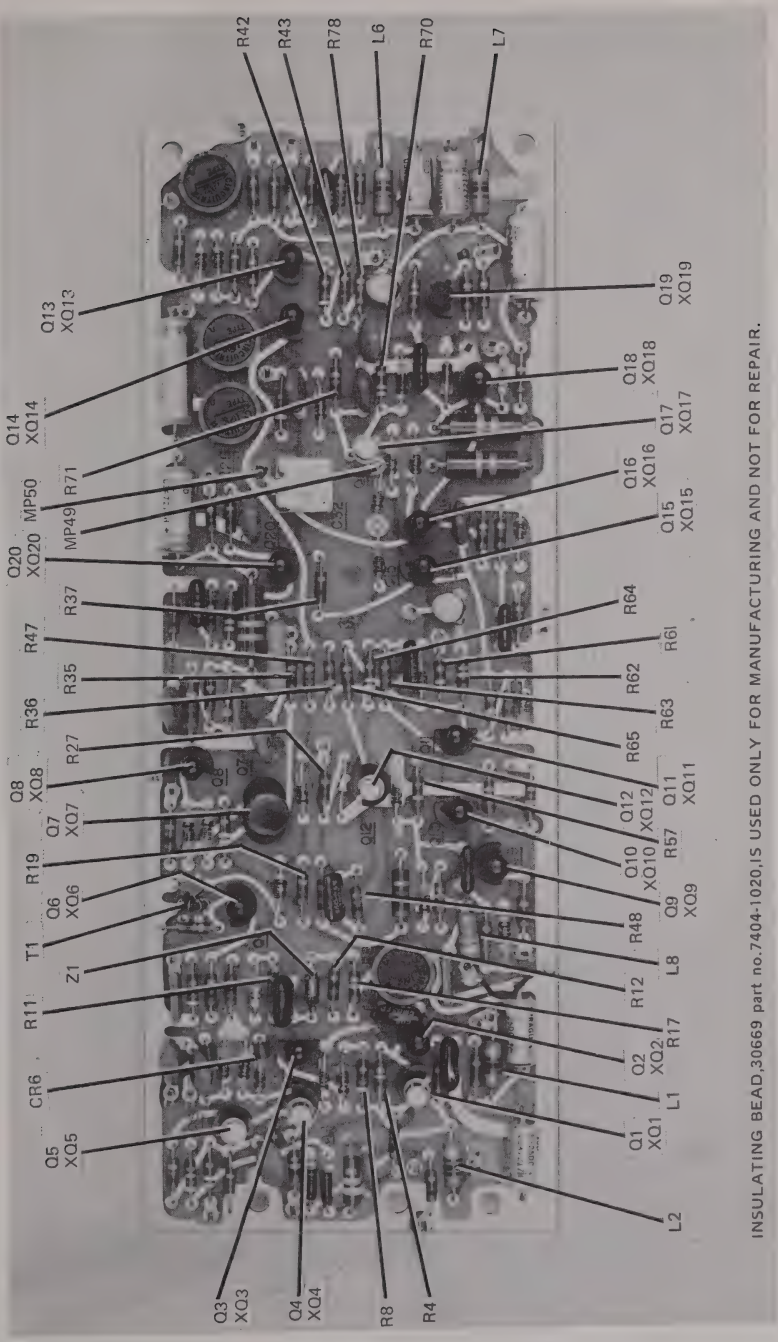

Figure 7-26 Delayed Sweep Assembly (A3A5)
(Sheet 3 of 3)

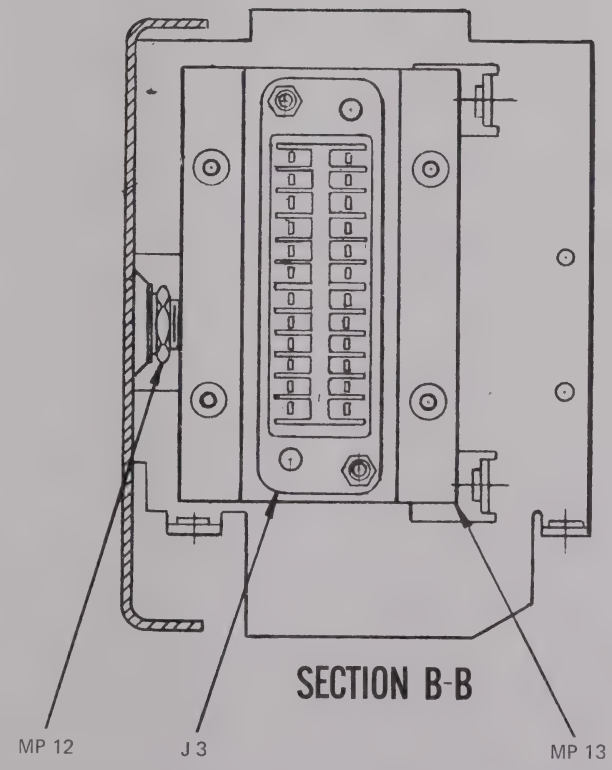

Figure 7-27. Time Base Function Assembly (A3A6) (Sheet 1 of 2)

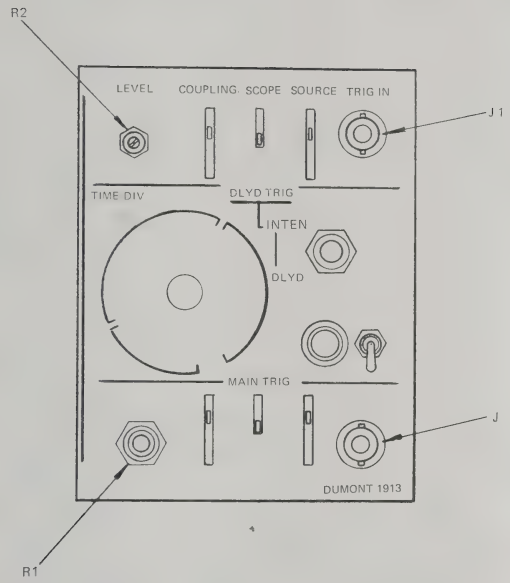

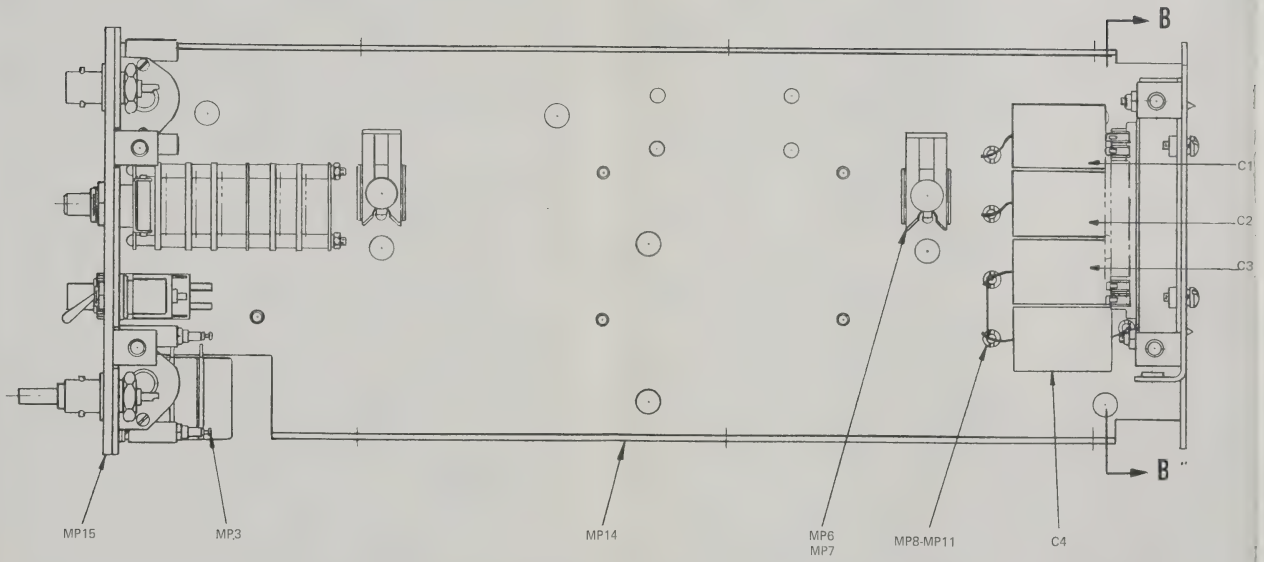

FOR USE ON AN/USM-281D CONFIGURATION ONLY. SEE FIGURE A-27 FOR AN/USM-281E CONFIGURATION.

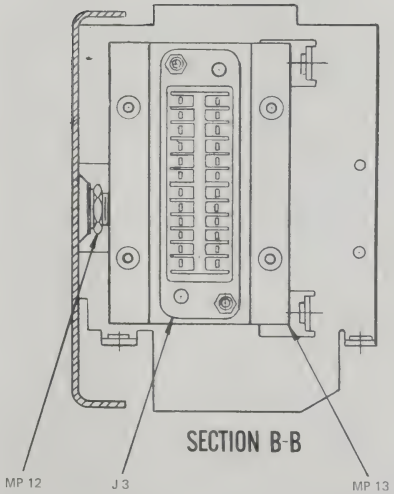

Figure 7-27. Time Base Function Assembly (A3A6) (Sheet 1 of 2)

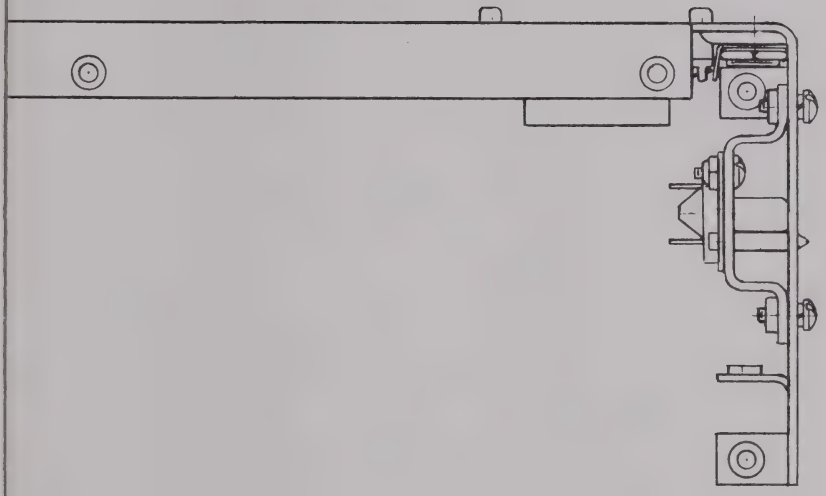

ON
-281E

Figure 7-27. Time Base Function Assembly (A3A6) (Sheet 2 of 2)

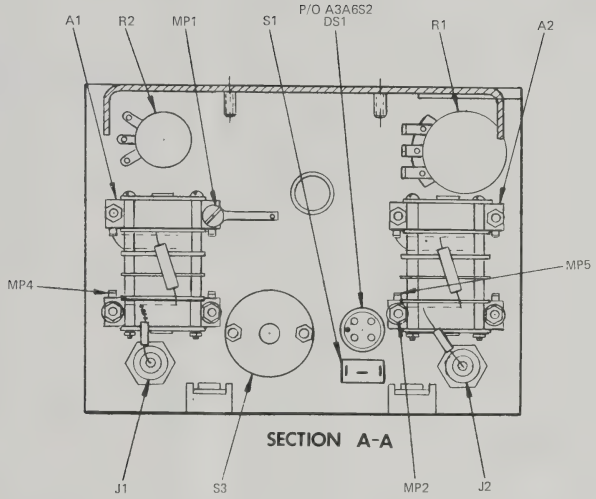

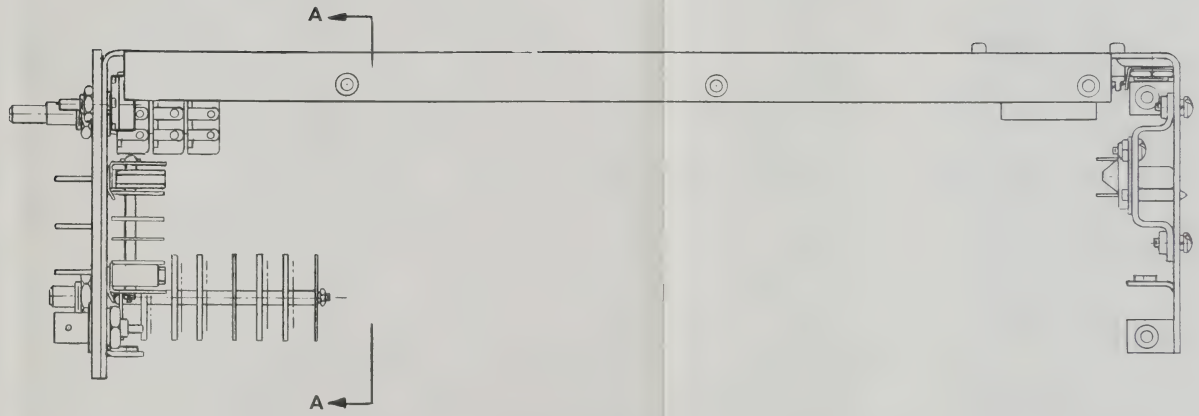

FOR USE ON AN/USM-281D CONFIGURATION ONLY. SEE FIGURE A-27 FOR AN/USM-281E CONFIGURATION.

Figure 7-27. Time Base Function Assembly (A3A6) (Sheet 2 of 2)

FOR USE ON AN/USM-281D CONFIGURATION ONLY. SEE FIGURE A-28 FOR AN/USM-281E CONFIGURATION.

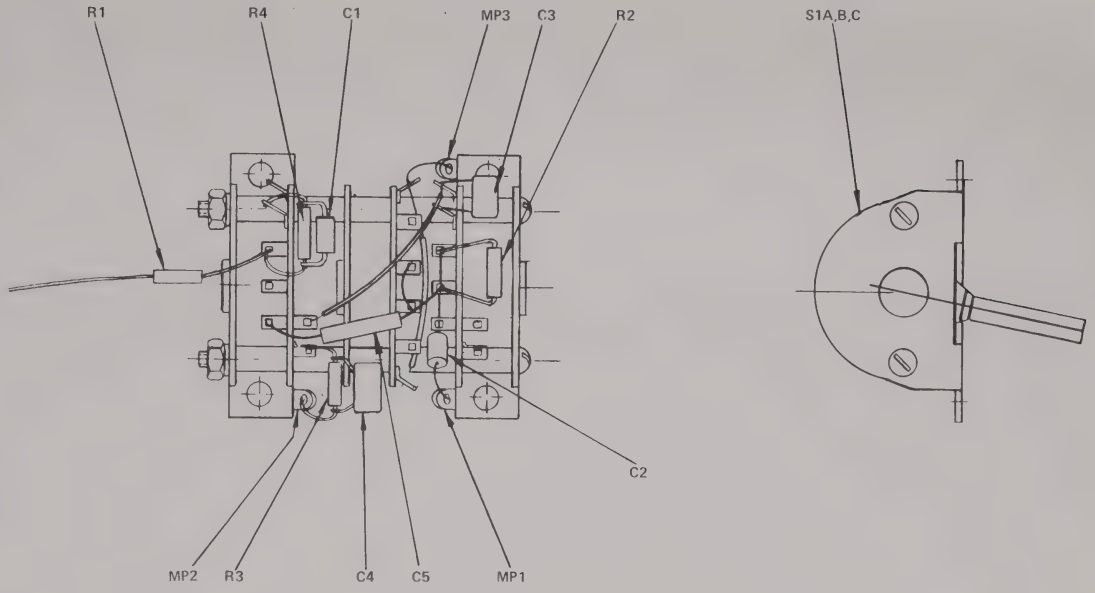

Figure 7-28. Trigger Switch Assembly (A3A6A1)

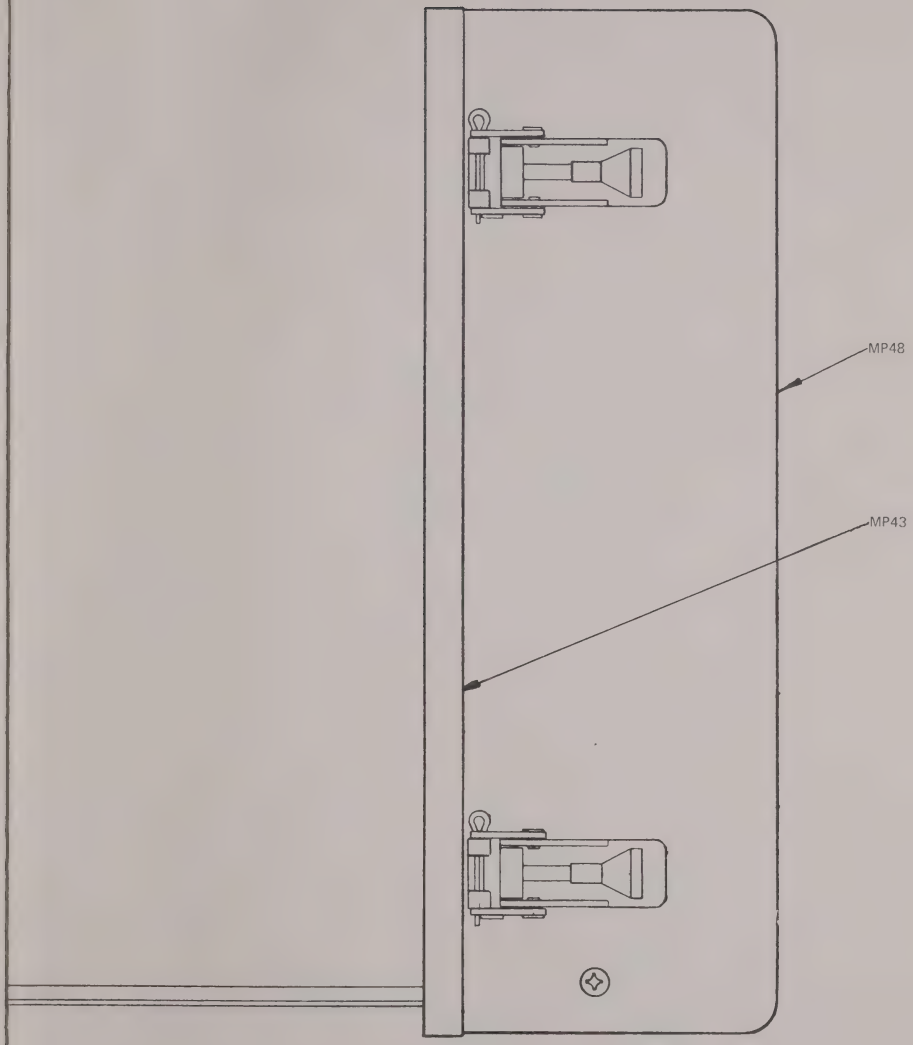

Figure 7-29. Front Cover Assembly (A4)

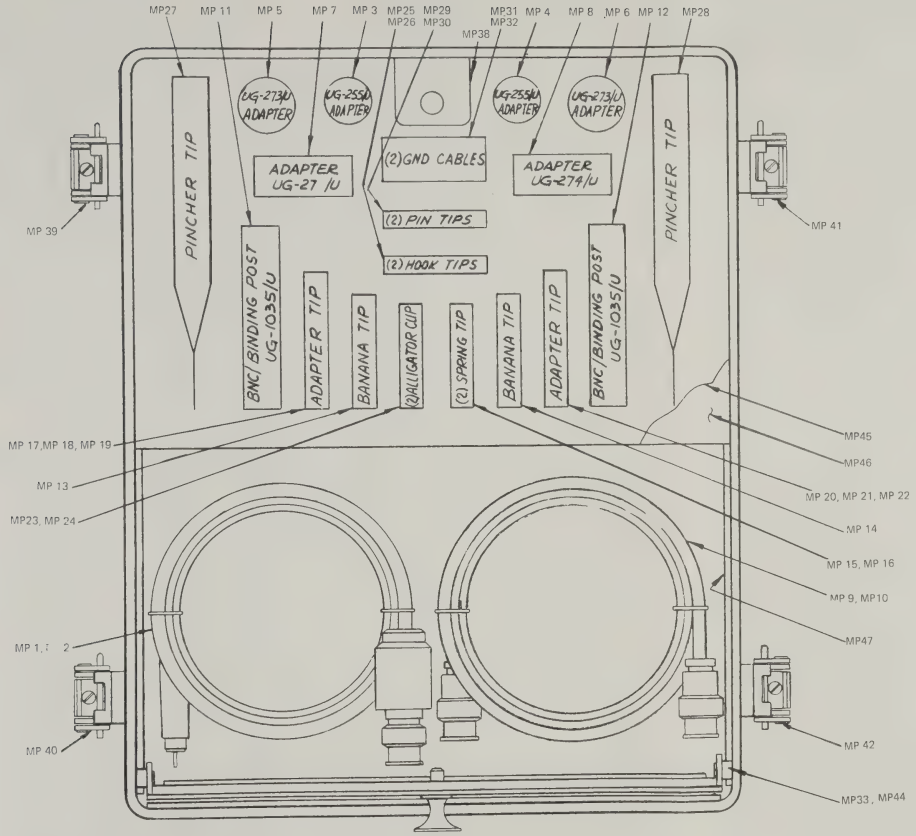

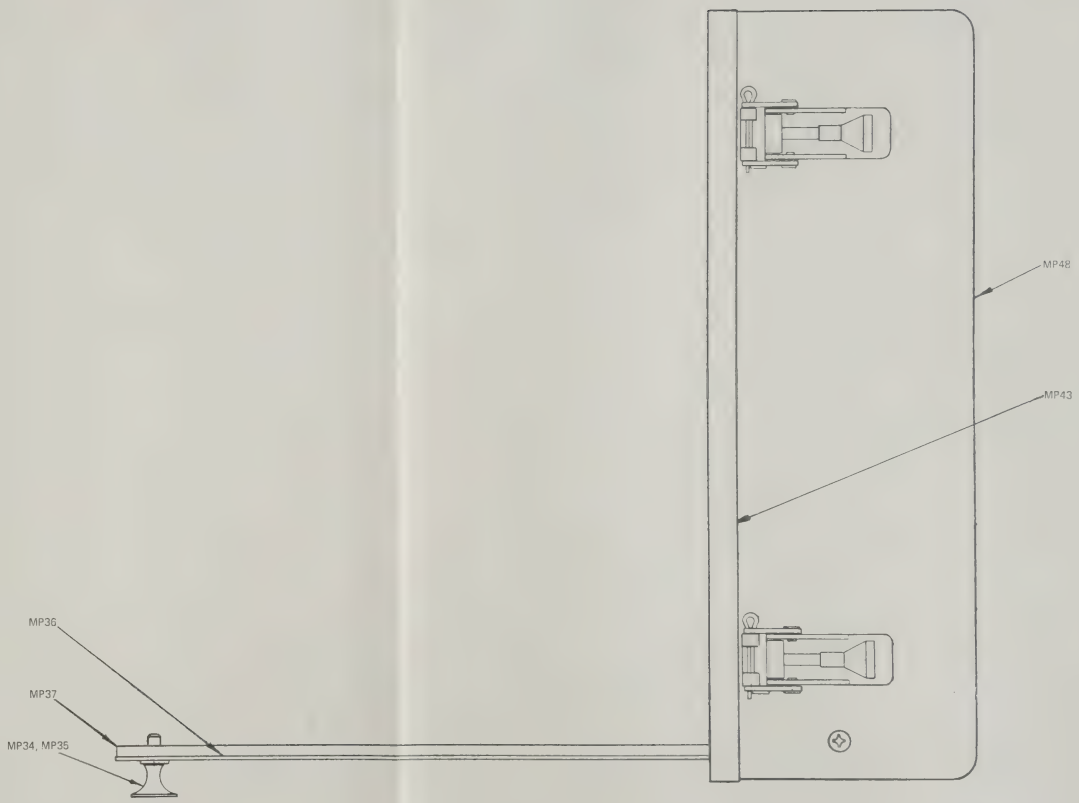

FOR USE ON AN/USM-281D CONFIGURATION ONLY. SEE FIGURE A-29 FOR AN/USM-281E CONFIGURATION.

Figure 7-29. Front Cover Assembly (A4)

8-1. GENERAL.

8-2. This chapter contains instructions for unpacking, removing and installing plug-in units, installation, and initial inspection and adjustment of the AN/USM-281D Oscilloscope.

8-3. UNPACKING AND HANDLING.

8-4 The AN/USM-281D Oscilloscope is shipped with both plug-in units installed and the test cables placed in the front cover. Carefully remove the unit from shipping container to prevent damage. Retain packing material for future use.

WARNING

Never handle the Oscilloscope without the rear cover installed. This could allow the instrument to slip out of the case.

8-5. POWER REQUIREMENTS.

8-6. The AN/USM-281D Oscilloscope is designed to operate with either a 115 vac or a 230 vac $\pm 10\%$, single phase, 47.5 Hz to 440 Hz power source capable of delivering 75 watts. When shipped from the factory, this instrument is set for 115 vac operation. If the instrument is to be operated on 230 vac, set the rear panel 115V-230V switch to 230V and replace the 2A SB fuse (rear panel) with a 1A SB fuse not supplied with the unit. The 115V-230V switch selects the desired operating voltage.

NOTE

Remove power cord by opening small panel on rear cover by turning 2 knurl knobs.

8-7. SITE SELECTION.

8-8. The AN/USM-281D Oscilloscope is a versatile, lightweight instrument designed to operate satisfactorily over a wide range of environments. The portability and accuracy of the instrument makes it ideal for use in shipboard, airborne, and land based electronic maintenance facilities.

8-9. PLUG-IN REMOVAL AND INSTALLATION.

8-10. For ease of handling, the dual channel vertical amplifier plug-in assembly and the time base and delay generator plug-in assembly are locked together, and removed or installed in the oscilloscope assembly as a single unit. Instructions for removing and installing the plug-in units are provided in the following paragraphs.

8-11. REMOVAL. Remove the plug-in units from the oscilloscope assembly as follows:

a. Rotate latch release on front panel. (See figure 8-1.)

b. Pull plug-in assemblies from the oscilloscope assembly.

c. Separate plug-in assemblies by lifting the two snap fasteners.

8-12. INSTALLATION. To install the plug-in units in the oscilloscope, reverse the removal procedure, making sure that the connectors on the plug-in units are properly aligned before pushing the units into the oscilloscope.

8-13. INSTALLATION REQUIREMENTS.

8-14. The AN/USM-281D Oscilloscope is a portable unit and normally will not be permanently installed in any one location. When choosing a location for the instrument, select an area that provides several inches of space around the cabinet to allow adequate ventilation, and insure that provisions for grounding the oscilloscope through the power cord are available.

8-15. CABLE ASSEMBLIES.

8-16. No special cables are required for installation of the oscilloscope. Test probes, test cables, connectors, fuses and adapters are supplied with the oscilloscope.

Figure 8-1. Removal of Plug-in Units

8-17. TEST PROBES. Two test probes, each consisting of a 3-foot coaxial cable with a BNC connector on one end and a 10:1 divider probe on the opposite end, are supplied with the oscilloscope. The 10:1 probe increases the voltage range of the oscilloscope, and is supplied with several tips for flexibility in connecting the probe to various types of terminals and connectors.

8-18. TEST CABLES. Two coaxial cables with BNC connectors on both ends are provided for connecting the oscilloscope to various types of equipment having BNC connectors.

8-19. ADAPTERS AND TEE CONNECTORS. The following adapters and connectors are supplied with the oscilloscope:

a. Two BNC male to UHF female Type UG-255/U adapters and two BNC female to UHF male Type UG-273/U adapters for making connections to equipment having UHF connectors.

b. Two BNC to binding posts Type UG-1035/U adapters for making connections to test leads terminated in banana connectors.

c. Two BNC to TEE connectors Type UG-274B/U for making multiple input connections to equipment having BNC connectors.

8-20. FUSE. 2 amp fuse for 115V operation is located on rear of unit where power cord is located.

8-21. INSPECTION.

8-22. Upon receipt of the AN/USM-281D Oscilloscope, and before applying power, check the unit for damage that may have occurred in transit. To check for damage, the plug-in assemblies should be removed and the entire unit inspected for broken or loose control knobs, bent or broken connectors, loose wires, and dents or scratches on the cover assembly. If the oscilloscope appears free from damage, replace the plug-in assemblies in the oscilloscope.

8-23. INITIAL TURN-ON AND ADJUSTMENT.

8-24. To apply power to the oscilloscope, perform the turn-on and adjustment procedure in Chapter 2, Table 2-3. The only adjustments required should be front panel adjustments. All internal adjustments are made at the factory, and the instrument should be ready for use upon receipt. After completing turn-on and adjustment, perform scheduled maintenance actions listed in Chapter 4, Table 4-1, to insure that the oscilloscope is functioning properly.

APPENDIX A

DIFFERENCE DATA FOR AN/USM-281E

A-1. INTRODUCTION.

A-2. This chapter contains difference data necessary to describe the electrical and physical differences between the AN/USM-281D and the AN/USM-281E Oscilloscope. The data contained in the previous sections of this technical manual apply to both versions of the AN/USM-281 except for the modifications which change the equipment to an AN/USM-281E configuration. These differences are listed as follows along with the reason for the modifications:

a. Main Frame OS-246(P)/U - Modification of Main Frame A1 to accept 100 mHz Vertical Output Assembly P/N 89017963 in addition to 50 mHz Vertical Output Assembly P/N 89017610. This change will permit use of either the 50 mHz or the 100 mHz vertical amplifier plug-in. In addition, this change improves performance of the unit at 50 mHz and permits better bandwidth stability versus temperature.

b. Main Frame OS-246(P)/U - Modification of Display Panel Assembly A1A1A6 by changing DELAY VERNIER variable resistor A1A1A6R3 and vernier dial A1A1A6MP4 from 2K ohms 10 turn with a 10 turn vernier dial to 2K ohms 10 turn with a 30 turn vernier dial. This change increases the reliability of the DELAY VERNIER control.

c. Main Frame OS-246(P)/U - Modification of the Front Cover Assembly A4 by deleting Grommet A4MP34 and Plunger A4MP35, modifying Cover Door A4M36 and Cover Bracket A4MP38 and adding new Squeeze Release latch as A4MP35. This modification improves the performance of the latch and prevents accidental breakage.

d. Main Frame OS-246(P)/U - Modification of Cover Assembly MP1. This modification provides self-adjusting fasteners to assure constant automatic tension on rear cover fasteners for permanent seal.

e. Low Voltage Printed Circuit Assembly A1A2A6A1 - Modification of the Low Voltage Printed Circuit Assembly A1A2A6A1 by removing the sampling RC circuitry and replacing with Zener diodes. This modification improves the performance of the vertical amplifier, prevents lockup under severe overvoltage conditions, and improves power line regulation.

f. Time Base Function Assembly A3A6 - Modification of Time Base Function Assembly by changing neon lamp (part of Push Switch A3A6S2) from a type NE-2E to a type NE-2V. This modification increases the starting reliability of the rearm function. Modification of Trigger Switch Assembly A3A6A1 by substituting a different value resistance and by changing tolerance to 1% to provide an external horizontal input resistance tolerance of 2%.

g. Main Sweep Assembly A3A2 - Modification of Main Sweep Assembly by changing trigger level circuit to provide more trigger level range and give increased signal overload protection. Substitution of 1% resistor for 5% resistor to provide an external horizontal input resistance tolerance of 2%.

h. Delayed Sweep Assembly A3A5 - Modification of Delayed Sweep Assembly by changing trigger level circuit to provide more trigger level range and give increased signal overload protection.

The detailed difference data set forth in this section will follow the general format of the first eight sections of this manual. In the event that no difference data exists in a given section, that portion will be omitted, i.e., if the functional description is the same for both configurations, the paragraph for functional description will be omitted. However, to avoid confusion and unnecessary cross referencing, the entire parts list for the changed assembly or subassembly will be duplicated in this section.

A-3. GENERAL INFORMATION.

A-4. The AN/USM-281E Oscilloscope is a portable, high frequency oscilloscope capable of accurately displaying and measuring simple and complex waveforms from dc to 50 mHz. The oscilloscope main frame is also designed

for 100 mHz capability by the use of a Model 1902 100 mHz Vertical Plug-in unit. The oscilloscope uses all solid-state circuitry except the cathode-ray tube (CRT) including field-effect transistor (FET) input amplifiers. The oscilloscope is convection cooled and will operate within specifications at ambient temperatures from -28° to +65°C (-18.4° to +149.0°F).

A-5. The AN/USM-281E Oscilloscope consists of an OS-246A(P)/U Oscilloscope, an AM-6566A/U Dual Trace Oscilloscope Plug-in Unit, a TD-1086A/U Time Base-Delay Oscilloscope Plug-in Unit and Oscilloscope Cover.

A-6. OS-246A(P)/U OSCILLOSCOPE. The OS-246A(P)/U Oscilloscope (Main Frame) contains the CRT, the low voltage and the high voltage power supplies, a calibrator supply, vertical output amplifier, horizontal output amplifier, and the Z axis amplifier. The CRT has an internal 8 x 10 centimeter graticule to eliminate parallax problems. The calibrator supply generates a 1 kHz square wave, and provides an output at 300 millivolts and 1 volt to front panel connectors for calibrating the vertical and horizontal amplifiers and probe calibration.

A-7. FUNCTIONAL DESCRIPTION.

A-8. VERTICAL OUTPUT AMPLIFIER. The vertical output amplifier is shown in simplified form in figure A-1. It is fed by the differential output of the vertical amplifier via a 120 nanosecond delay which delays the vertical signal to allow time for the sweep to start. Since the two halves of the amplifier are identical, details are given only for one. The input signal from the delay line is terminated in a network which is designed to provide an optimum impedance match, thereby minimizing reflections. Common base amplifiers Q1 and Q2 present a low impedance input stage. R3 is a fine adjustment used to center the trace for the mid-range position of the vertical position controls. The signal drives differential amplifier Q5 and Q6 through emitter followers Q3 and Q4. The differential amplifier stage has an adjustable emitter peaking network. When the vertical gain is set for X5, relay K1 is energized and R48 is switched into the emitter circuit adjusted by R49. This increases the gain of the stage by a factor of five. When the beam finder switch is pressed, R14 is unshorted and limits current available at Q5 and Q6 so the trace cannot deflect beyond the face of the CRT. R21 and C11 provide thermal response compensation. The signal is then coupled through emitter followers Q7 and Q8 to drive the differential cascode amplifiers Q9, Q10, Q11 and Q12, which drive the deflection plates. C17 and C21 permit adjustment of the bandwidth while R31 and C16 provide thermal response compensation. Q13 is a constant current bias source for Q9 and Q10.

A-9. COMPARATOR AND PULSE GENERATOR. The function description for this circuit is identical to that contained in paragraph 3-35 281D with the exception that the description is keyed to figure A-2.

A-10. TROUBLESHOOTING. Troubleshooting techniques are the same as those contained in section 5 with the exception that the procedures are key to the modified signal flow diagrams and schematics which are listed as follows:

a. Vertical Output Amplifier functional signal flow is figure A-3.

b. Main Sweep and Trigger Input Amplifier, Comparator and Pulse Generator functional signal flow is figure A-4.

c. Delayed Sweep Trigger Input Amplifier Comparator functional signal flow is figure A-5.

d. Low Voltage Power Supply functional signal flow is figure A-6.

e. Vertical Output Amplifier schematic is figure A-7.

f. Main Trigger and Sweep Generator schematic is figure A-8.

g. Delayed Trigger and Sweep Generator schematic is figure A-9.

h. Low Voltage Power Supply schematic is in figure A-10.

i. Auxiliary Output/Amplifier schematic is figure A-11.

A-11. CORRECTIVE MAINTENANCE.

A-12. VERTICAL POSITION CENTERING ADJUSTMENT. The vertical position centering

adjustment is shown in figures A-12, A-13 and A-21.

A-13. TEST EQUIPMENT. This adjustment procedure requires Oscillator 0-1025/U.

A-14. PROCEDURE.

a. Remove the oscilloscope cover as described in paragraph 6-5.

b. Turn PWR switch ON. Allow 15 minute warmup before proceeding.

c. Set front panel controls as follows:

VERTICAL MODE to CH1
VOLTS/DIV switch to 0.1

d. Connect the oscillator to channel 1 INPUT, set frequency to 1 kHz and adjust level to provide 8 centimeters of deflection.

e. Set VOLTS/DIV switch to .05 and CH1 POSITION fully CW.

f. Adjust POSITION CENTERING ADJUST control A1A1A5R3 until the negative peaks of the sine wave are 2 centimeters above the center graticule. From this point, adjust CH1 POSITION control between the fully CW and CCW position and adjust A1A1A5R3 until the positive peaks with the CH1 POSITION control fully CCW are the same distance below the center graticule as the negative peaks with the CH1 POSITION control fully CW are above the center graticule.

g. Remove the equipment and replace oscilloscope cover.

A-15. VERTICAL AMPLIFIER RESPONSE ADJUSTMENTS.

A-16. TEST EQUIPMENT. These adjustment procedures require Hewlett-Packard Square Wave Generator Model 211B, Hewlett-Packard 50 ohm Termination Model 10100A, and Hewlett-Packard Pulse Generator Model 8000A.

A-17. PROCEDURE.

a. Remove oscilloscope cover as described in paragraph 6-5.

b. Turn PWR switch ON. Allow 5 minute warmup before proceeding.

c. Set front panel controls as follows:

AC-GND-DC to DC
VOLTS/DIV to .005
Vernie portion of VOLTS/DIV to CAL
VERTICAL MODE to CH1
TRIG MODE to DSPLY
TIME/DIV to 1 uSEC

d. Connect Square Wave Generator through 50 ohm termination to channel 1 INPUT.

e. Set generator frequency to 1mHz. Adjust generator level to provide 6 centimeters of deflection.

f. Adjust HF ADJUST control A1A1A5C9 for a flat-topped square wave.

g. Set RESP ADJUST controls A2A6R40 and A2A6R101 to mid-range.

h. Connect Pulse Generator through 50 ohm termination to channel 1 INPUT.

i. Set TIME/DIV to 0.1 uSEC. Adjust HF ADJ control A1A1A5C8 and RESP ADJ control A1A1A5 R17 for a flat top on the pulse.

j. Set HF ADJUST control A1A1A5C21 for minimum peaking.

k. Set HF ADJ A2A6C36 to the center of its range.

l. Adjust HF ADJUST A1A1A5C17 for fastest risetime with minimum overshoot. Alternately adjust A1A1A5C17 and A2A6C36 for fastest risetime with minimum overshoot.

m. Pull HORIZ POSITION - X10 GAIN control and note a rise time of less than 7.0 ns. Push in HORIZ POSITION - X10 GAIN control.

n. Connect Pulse Generator through 50-ohm termination to channel 2 INPUT.

o. Set VERTICAL MODE to CH2.

p. Adjust HF ADJUST A2A6C37 for fastest rise time with minimum overshoot.

q. Pull HORIZ POSITION - X10 GAIN control and note a rise time of less than 7.0 ns. Push in HORIZ POSITION - X10 GAIN control.

r. Disconnect test equipment and replace oscilloscope cover.

A-18. ATTENUATOR AND INPUT CAPACITANCE ADJUSTMENTS. The attenuator and input capacitance adjustments are shown in figure A-14, A-15, and 5-19.

A-19. TEST EQUIPMENT. These adjustment procedures require Tektronix LC Meter Type 130, Hewlett-Packard Square Wave Generator Model 211B and a 10 db pad.

A-20. PROCEDURE.

a. Remove oscilloscope cover as described in paragraph 6-5.

b. Turn PWR switch ON. Allow 5 minute warmup before proceeding.

c. Set front panel controls as follows:

VERTICAL MODE to CH1
AC-GND-DC to DC
VOLTS/DIV to .005
Vernier portion of VOLTS/DIV to CAL

NOTE

Capacitors to be adjusted to calibrate the attenuators are listed in Table 6-1 with corresponding identification code numbers as they appear on the attenuator assembly. See figures A-14, A-21, A-22, and 7-15.

d. Connect LC meter to INPUT BNC connector.

e. Adjust channel 1 attenuator INPUT CAP ADJUST A2A7A2C11 for 24 pf reading.

f. Set Generator at 10 kHz for channel 1 INPUT through a 10 db pad.

g. Set VOLTS/DIV switch to .01.

h. Adjust RESPONSE ADJUST attenuator A2A7A2C3 for a flat-topped square wave.

i. Adjust RESP ADJUST A2A6R40 to remove high frequency peak from square wave.

j. Set VOLTS/DIV switch to .02.

k. Adjust RESP ADJUST attenuator A2A7A1C1 for a flat-topped square wave.

l. Set VOLTS/DIV switch to .05.

m. Adjust RESP ADJUST attenuator A2A7A1C7 for a flat topped square wave.

n. Set VOLTS/DIV switch to 0.1.

o. Adjust INPUT CAP ADJUST attenuator A2A7A2C2 for a flat-topped square wave.

p. Set VOLTS/DIV switch to 0.2.

q. Adjust INPUT CAP ADJUST attenuator A2A7A2C4 for a flat-topped square wave.

r. Set VOLTS/DIV switch to 0.5.

s. Connect Square Wave Generator directly to channel 1 INPUT.

t. Adjust RESPONSE ADJUST A2A7A1C9 for a flat-topped square wave.

u. Set VOLTS/DIV switch to 5.

v. Adjust RESPONSE ADJUST A2A7A1C11 for a flat-topped square wave.

w. Connect LC meter to BNC connector.

x. Set VOLTS/DIV switch to .05.

y. Adjust INPUT CAP ADJUST A2A7C6 for 24 pf reading.

z. Set VOLTS/DIV switch to 0.5.

aa. Connect LC Meter to channel 1 input.

ab. Adjust INPUT CAP ADJUST A2A7A2C8 for 24 pf reading.

ac. Set VOLTS/DIV switch to 5.

ad. Adjust INPUT CAP ADJUST A2A7A2C10 for 24 pf reading.

ae. Disconnect test equipment and replace oscilloscope cover.

NOTE

For attenuator and input capacitance adjustments for channel 2, repeat steps 4 through 31, except adjust RESP ADJUST A2A6R101 in step i. All A2A7 reference designations for channel 1 are A2A8 for channel 2.

A-21. VERTICAL AMPLIFIER X5 GAIN ADJUSTMENTS.

A-22. TEST EQUIPMENT. Hewlett-Packard Square Wave Generator Model 211B, Hewlett-Packard 50 ohm Termination Model 10100A.

A-23. PROCEDURE.

a. Remove oscilloscope cover as described in paragraph 6-5.

b. Turn PWR switch ON, allow 5 minute warmup before proceeding.

c. Set controls as follows:

AC-GND-DC to DC
VOLTS/DIV to .01 (vernier portion to CAL)
VERTICAL MODE to CH1
TRIG MODE to DSPLY
TIME/DIV to 0.2 mSEC

d. Connect Square Wave Generator through 50 ohm termination to channel 1 INPUT.

e. Set generator to 1 kHz, adjust level for 6 cm deflection.

f. Set VOLTS/DIV to .05 and VERR GAIN X1 X5 switch to X5.

g. Adjust A1A1A5R49 for 6 cm deflection.

h. Remove equipment, replace cover.

A-24. PARTS LIST. The parts list for each modified subassembly is included in this section as shown in the following listing:

SUBASSEMBLY	TABLE	FIGURE
Display Section Assembly A1A1	A-1	A-16
Auxiliary Output Assembly A1A1A1A1	A-2	A-17
High Voltage Chassis Assembly A1A1A4	A-3	A-18
Vertical Output Assembly A1A1A5	A-4	A-19
Display Panel Assembly A1A1A6	A-5	A-20
Low Voltage Printed Circuit Assembly A1A2A6A1	A-6	A-21
Main Frame Cover A1A3	A-7	A-22
Logic Printed Circuit Assembly A2A3	A-8	A-23
Vertical Preamplifier A2A6	A-9	A-24
Main Sweep Assembly A3A2	A-10	A-25
Delayed Sweep Assembly A3A5	A-11	A-26
Time Base Function Assembly A3A6	A-12	A-27 A-28
Front Cover Assembly A4	A-13	A-29

The list of Common Item Descriptions for the AN/USM-281E is given in table A-14. The list of Attaching Hardware is given in table A-15. The List of Manufacturers is given in table A-16.

TABLE A-1. OSCILLOSCOPE OS-246A(P)/U(A1), DISPLAY SECTION ASSEMBLY A1A1, PARTS LIST

Reference Designation	Notes	Name and Description	Figure Number
A1A1		DISPLAY SECTION ASSEMBLY: 30669 part no. 8901-7903	A-16
A1A1MP1		SHIELD, LIGHT: 30669 part no. 3801-8811 (Attaching Parts): EYELET: 30669 part no. 6300–8110 (2)	A-16
A1A1MP2		COVER, H.V. SHIELD: 30669 part no. 4202-5634 (Attaching Parts):SCREW, MACHINE: Sheet metal, hexagon head, no. 6 x 1/2 in. lg; 30669 part no. 6040-9010 (2)	A-16
A1A1MP3		Not used	
A1A1MP4		CLAMP, CABLE: 30669 part no. 3700-9420	A-16
A1A1MP5		Same as A1A1MP4	A-16
A1A1MP6		SUPPORT: 30669 part no. 3507-7812 (Attaching Parts): B (6); NUT, SELF-RETAINING: No. 6-32; 30669 part no. 6103-9060 (2): LOCKWASHER, INTERNAL TOOTH, no. 6, 30669 part no. 6220-0030	A-16
A1A1MP7		Not used	
A1A1MP8		BRACKET, TUBE SHIELD: 30669 part no 3507-7531 (Attaching Parts): SCREW, MACHINE: Flat head no. 6-32 x 3/8 in. lg; 30669 part no. 6009-6680 (2); N (2)	A-16
A1A1MP9		SHIELD, CATHODE RAY TUBE: 30669 part no. 4202-5541	A-16
A1A1MP10		CUSHION, CATHODE RAY TUBE: 30669 part no. 7403-5811	A-16
A1A1MP11		CUSHION, CATHODE RAY TUBE: 30669 part no. 7403-5831	A-16
A1A1MP12		Not used	
A1A1MP13		CLAMP, CABLE: 30669 part no. 3702-1240	A-16
A1A1MP14		CASTING, FINISHED: 30669 part no. 3507-7673	A-16
A1A1R1		RESISTOR, FIXED WIREWOUND: 400 ohms, 5w; 3%; 91637 part no. RH5; 30669 part no. 0239-0020 (Attaching Parts): SCREW, THREAD FORMING: rnd hd no. 2 type B, 1/4 in. lg; 30669 part no. 6043-0460 (2)	A-16
A1A1R2		Not Used	
A1A1R3		RESISTOR, FIXED, COMPOSITION: 1 Megohm, 1/4w; 01121 part no. CB1055; 30669 part no. 0235-5330	A-16
A1A1XV1		SOCKET, ELECTRON TUBE: 73445 part no. TYPE 55566; 30669 part no. 3401-0980	A-16

TABLE A-2. OSCILLOSCOPE OS-246A(P)/U(A1), AUXILIARY OUTPUT ASSEMBLY A1A1A1A1, PARTS LIST

Reference Designation	Notes	Name and Description	Figure Number
A1A1A1A1		AUXILIARY OUTPUT ASSEMBLY: 30669 part no. 8901-7859 (Attaching Parts) B(2),N(2)	A-17
A1A1A1A1CR1		Table 7-3; Item No. 43	A-17
A1A1A1A1CR2		Same as A1A1A1A1CR1	A-17
A1A1A1A1MP1		TERMINAL: 82893 part no. PINT-28; 30669 part no. 5120-2800	A-17
A1A1A1A1MP2		PRINTED CIRCUIT BOARD: 30669 part no. 4003-1502	A-17
A1A1A1A1Q1		Table 7-3, Item No. 53	A-17
A1A1A1A1Q2 to A1A1A1A1Q4		Same as A1A1A1A1Q1	A-17
A1A1A1A1Q5		Table 7-3; Item No. 52	A-17
A1A1A1A1Q6		Same as A1A1A1A1Q5	A-17
A1A1A1A1R1		Table 7-3; Item No. 32	A-17
A1A1A1A1R2 to A1A1A1A1R8		Same as A1A1A1A1R1	A-17
A1A1A1A1R9		Table 7-3; Item No. 33	A-17
A1A1A1A1R10		Same as A1A1A1A1R9	A-17
A1A1A1A1R11		Not Used	
A1A1A1A1R12		Table 7-3; Item No. 21	A-17
A1A1A1A1R13		Not Used	
A1A1A1A1R14		Same as A1A1A1A1R12	A-17
A1A1A1A1R15		RESISTOR, FIXED, COMPOSITION: 200 ohms, 1/4w; 01121 part no. CB2015; 30669 part no. 0235-4450	A-17
A1A1A1A1R16		Same as A1A1A1A1R15	A-17
A1A1A1A1R17		Table 7 - 3; Item No. 26	A-17
A1A1A1A1R18		Same as A1A1A1A1R17	A-17
A1A1A1A1R19		Table 7 - 3; Item No. 31	A-17
A1A1A1A1R20		Same as A1A1A1A1R19	A-17
A1A1A1A1R21		Table 7 - 3; Item No. 35	A-17
A1A1A1A1R22		Same as A1A1A1A1R21	A-17
A1A1A1A1R23		Table 7 - 3; Item No. 19	A-17
A1A1A1A1R24		Table 7 - 3; Item No. 37	A-17
A1A1A1A1R25		Not Used	
A1A1A1A1R26		Not Used	
A1A1A1A1XQ1		Table 7 - 3; Item No. 47	A-17
A1A1A1A1XQ2 to A1A1A1A1XQ6		Same as A1A1A1A1XQ1	A-17

TABLE A-3. OSCILLOSCOPE OS-246A(P)/U(A1), HIGH VOLTAGE CHASSIS ASSEMBLY A1A1A4, PARTS LIST

Reference Designation	Notes	Name and Description	Figure Number
A1A1A4		HIGH VOLTAGE CHASSIS ASSEMBLY: 30669 part no. 8901-7616	A-18
A1A1A4CR1		Table 7-3; Item No. 44	A-18
A1A1A4C1		Same as A1A1A2C16	A-18
A1A1A4L1		COIL, RADIO, FREQUENCY: 2.5 mh; 91934 part no. 6302; 30669 part no. 2101-9010	A-18
A1A1A4MP1		SHIELD, HIGH VOLTAGE: 30669 part 3103-5633	A-18
A1A1A4MP2		GROMMET, STRIP: 30669 part no. 3802-3310	A-18
A1A1A4MP3		INSULATOR, WAFER, TO-66; 30669 part no. 4101-2350	A-18
A1A1A4MP4		TERMINAL, STUD, INSULATED: 30669 part no. 5100-7100 (Attaching Parts) C (3), M (3)	A-18
A1A1A4MP5		Same as A1A1A4MP4	A-18
A1A1A4MP6		Same as A1A1A4MP4	A-18
A1A1A4MP7		TERMINAL, LUG: No. 4; 30669 part no. 5100-0390	A-18
A1A1A4M1		MULTIPLIER, HIGH VOLTAGE: 30669 part no. 8800-3262 (Attaching parts) I (2), N (2)	A-18
A1A1A4Q1		TRANSISTOR: NPN; 04713 part no. 2N3766; 30669 part no. 2601-0600 (Attaching Parts) SCREW, MACHINE, PAN HEAD: stainless steel, no. 6-32 x 3/8 in lg; 30669 part no. 6043-0530 (2)	A-18
A1A1A4R1		RESISTOR, FIXED, COMPOSITION: 7,500 ohms, 1/4w; 01121 part no. CB7525; 30669 part no. 0235-4820	A-18
A1A1A4T1		TRANSFORMER, POWER, STEP-UP: High voltage: 30669 part no. 2101-9601 (Attaching Parts)SCREW, MACHINE, ROUND HEAD; stainless steel, no. 6-32 x 1/4 in lg; 30669 part no. 6009- 7620 (2). N (2)	A-18
A1A1A4XQ1		SOCKET, TRANSISTOR: TO-66; 22753 part no. PT55A; 30669 part no. 3401-1000	A-18

TABLE A-4. OSCILLOSCOPE OS-246A(P)/U(A1), VERTICAL OUTPUT ASSEMBLY A1A1A5, PARTS LIST

Reference Designation	Notes	Name and Description	Figure Number
A1A1A5		VERTICAL OUTPUT ASSEMBLY: 30669 part no. 8901-7963	7-9
A1A1A5CR1		SEMICONDUCTOR DEVICE, DIODE: Zener; 84048 part no. 1N749A; 30669 part no. 2601-0620	7-9
A1A1A5CR2		Table 7-3; Item No. 43	7-9
A1A1A5CR3		SEMICONDUCTOR DEVICE, DIODE: Zener; 28959 part no. 1N967B; 30669 part no. 2601-3120	7-9
to			
A1A1A5CR5			
A1A1A5C1		Table 7-3; Item No. 5	7-9
A1A1A5C2		CAPACITOR, FIXED, CERAMIC DIELECTRIC: 3.3 pf, ±0.25%, 18796 part no. 301-COG-339C; 30669 part no. 0327-4060	7-9
A1A1A5C3		Same as A1A1A5C2	7-9
A1A1A5C4		Table 7-3; Item No. 3	7-9
A1A1A5C5		Same as A1A1A5C1	7-9
A1A1A5C6		Table 7-3; Item No. 2	7-9
A1A1A5C7		Same as A1A1A5C6	7-9
A1A1A5C8		CAPACITOR, VARIABLE: 5-25 pf; 18796 part no. 518-000A-5-25; 30669 part no. 0328-3140	7-9
A1A1A5C9		CAPACITOR, VARIABLE: 9-36 pf; 18796 part no. 538-011D; 30669 part no. 0327-3670	7-9
A1A1A5C10		CAPACITOR, FIXED, MICA DIELECTRIC: 51 pf, ±5%, 500 vdc; 72136 part no. DM15-510J; 30669 part no. 0317-5210	7-9
A1A1A5C11		Same as A1A1A2C15	
A1A1A5C12		Same as A1A1A2C15	
A1A1A5C13		Not Used	
A1A1A5C14		Same as A1A1A5C6	
A1A1A5C15		Same as A1A1A2C15	
A1A1A5C16		Same as A1A1A2C15	
A1A1A5C17		Same as A1A1A5C9	
A1A1A5C18		Not Used	
A1A1A5C19		CAPACITOR, FIXED, CERAMIC DIELECTRIC: 10,000 pf, 150 vdc, 71590 part no. DDM103; 30669 part no. 0319-1060	7-9
A1A1A5C20		Not Used	
A1A1A5C21		Same as A1A1A5C8	7-9
A1A1A5C22		CAPACITOR, FIXED, CERAMIC DIELECTRIC: 1,000 pf, 100 vdc, 18796 part no. 8101-100-651-102M; 30669 part no. 0328-3220	7-9
A1A1A5C23		Same as A1A1A5C22	7-9
A1A1A5C24		Table 7-3; Item No. 3	7-9
A1A1A5C25		Same as A1A1A5C19	7-9
A1A1A5C26		CAPACITOR, FIXED, MICA DIELECTRIC: 56 pf, 500 vdc, 72136 part no. DM15-560J; 30669 part no. 0317-5220	7-9
A1A1A5K1		RELAY, REED: 15636 part no. RA30381051; 30669 part no. 0503-2840	7-9
A1A1A5L1		COIL, RADIO FREQUENCY: 5.6 uh; 82142 part no. Type 154435-1K; 30669 part no. 2110-2600	7-9
to			
A1A1A5L5			
A1A1A5L6		Not Used	
A1A1A5L7		COIL, RADIO FREQUENCY: 30669 part no. 2101-9631	
A1A1A5L8		Same as A1A1A5L7	
A1A1A5MP1		PRINTED CIRCUIT BOARD: 30669 part no. 4003-1614	

TABLE A-4. OSCILLOSCOPE OS-246A(P)/U(A1), VERTICAL OUTPUT ASSEMBLY A1A1A5, PARTS LIST (CONT)

Reference Designation	Notes	Name and Description	Figure Number
A1A1A5MP2		CONTACT, ELECTRICAL: 30669 part no. 5102-2510	A-19
A1A1A5MP3		Same as A1A1A5MP2	A-19
A1A1A5MP4		PIN, FORMED: 30669 part no. 5102-2760	A-19
A1A1A5MP5		Same as A1A1A5MP4	A-19
A1A1A5MP6		TERMINAL, FORMED: 30669 part no. 5102-2800	A-19
A1A1A5MP7 to A1A1A5MP18		Same as A1A1A5MP6	A-19
A1A1A5MP19		HEATSINK: TO-5; 30669 part no. 8100-5890	A-19
A1A1A5MP20 to A1A1A5MP23		Same as A1A1A5MP19	A-19
A1A1A5MP24 to A1A1A5MP34		Same as A1A1A2MP39	A-19
A1A1A5Q1 to A1A1A5Q4		TRANSISTOR: NPN: 18714 part no. 2N5179; 30669 part no. 2601-0210	A-19
A1A1A5Q5		TRANSISTOR: NPN: 18714 part no. 2N5109; 30669 part no. 2601-0520	A-19
A1A1A5Q6		Same as A1A1A5Q5	A-19
A1A1A5Q7		TRANSISTOR: NPN: 04713 part no. 2N6304; 30669 part no. 2601-0770	A-19
A1A1A5Q8		Same as A1A1A5Q7	A-19
A1A1A5Q9		Same as A1A1A5Q5	A-19
A1A1A5Q10		Same as A1A1A5Q5	A-19
A1A1A5Q11		TRANSISTOR, NPN: 04713 part no. 2N3866; 30669 part no. 2601-0530	A-19
A1A1A5Q12		Same as A1A1A5Q11	A-19
A1A1A5Q13		TRANSISTOR: NPN: 18714 part no. 2N3053; 30669 part no. 2601-0550	A-19
A1A1A5R1		RESISTOR, FIXED, FILM: 90.9 ohms, ±1%, 1/8 w; 91637 part no. MFF1-8-90R9T1; 30669 part no. 0238-8760	A-19
A1A1A5R2		RESISTOR, FIXED, COMPOSITION: 910 ohms, ±5%, 1/4 w; 01121 part no. CB9115; 30669 part no. 0235-4610	A-19
A1A1A5R3		RESISTOR, VARIABLE: 100 ohms; 32997 part no. 3369P1101A; 30669 part no. 0109-6510	A-19
A1A1A5R4		Same as A1A1A5R2	A-19
A1A1A5R5		Same as A1A1A5R1	A-19
A1A1A5R6		Table 7-3; Item No. 27	A-19
A1A1A5R7		RESISTOR, FIXED, COMPOSITION: 300 ohms, ±5%, 1/4 w; 01121 part no. CB3015; 30669 part no. 0235-4490	A-19
A1A1A5R8		RESISTOR, FIXED, COMPOSITION: 390 ohms, ±5%, 1/2 w; 01121 part no. EB3915; 30669 part no. 0203-0380	A-19
A1A1A5R9		Table 7-3; Item No. 31	A-19
A1A1A5R10		RESISTOR, FIXED, FILM: 316 ohms, ±1%, 1/8 w; 91637 part no. MFF1/8T1; 30669 part no. 0238-9980	A-19
A1A1A5R11		Same as A1A1A5R10	A-19

TABLE A-4. OSCILLOSCOPE OS-246A(P)/U(A1), VERTICAL OUTPUT ASSEMBLY A1A1A5, PARTS LIST (CONT)

Reference Designation	Notes	Name and Description	Figure Number
A1A1A5R12		Table 7-3; Item No. 29	A-19
A1A1A5R13		Same as A1A1A5R12	A-19
A1A1A5R14		Table 7-3; Item No. 32	A-19
A1A1A5R15		RESISTOR, FIXED, COMPOSITION: 910 ohms, 1/2 w; 01121 part no. EB9115; 30669 part no. 0203-0470	A-19
A1A1A5R16		Same as A1A1A5R15	A-19
A1A1A5R17		RESISTOR, VARIABLE: 200 ohms; 32997 part no. 3329H-1-201; 30669 part no. 0109-6430	A-19
A1A1A5R18		Table 7-3; Item No. 16	A-19
A1A1A5R19		RESISTOR, FIXED, COMPOSITION: 2,200 ohms, 1/4 w; 01121 part no. CB2225; 30669 part no. 0235-4690	A-19
A1A1A5R20		Same as A1A1A5R1	A-19
A1A1A5R21		RESISTOR, FIXED, COMPOSITION: 240 ohms, 1/2 w; 01121 part no. EB2415; 30669 part no. 0203-0330	A-19
A1A1A5R22		Same as A1A1A5R21	A-19
A1A1A5R23		RESISTOR, FIXED,FILM: 619ohms, 1/8 w; MFF1/8T1 part no. 91637; 30669 part no. 0238-9570	A-19
A1A1A5R24		Same as A1A1A5R23	A-19
A1A1A5R25		RESISTOR, FIXED, COMPOSITION: 1,500 ohms, 1 w; 01121 part no. CB1525; 30669 part no. 0203-3520	A-19
A1A1A5R26		Same as A1A1A5R25	A-19
A1A1A5R27		RESISTOR, FIXED, FILM: 30.1 ohms, 1/4 w; 91637 part no. MFF1/8T1; 30669 part no. 0238-9990	A-19
A1A1A5R28		Same as A1A1A5R27	A-19
A1A1A5R29		Not Used	
A1A1A5R30		RESISTOR, FIXED, COMPOSITION: 180 ohms, 1/4 w; 01121 part no. CB1815; 30669 part no. 0235-4440	A-19
A1A1A5R31		RESISTOR, FIXED, WIRE WOUND: 220 ohms, 2 w; 91637 part no. RS2C; 30669 part no. 0239-0010	A-19
A1A1A5R32		Not Used	
A1A1A5R33		Table 7-3; Item No. 30	A-19
A1A1A5R34		Same as A1A1A5R33	A-19
A1A1A5R35		Same as A1A1A5R31	A-19
A1A1A5R36		Not Used	
A1A1A5R37		RESISTOR, FIXED, COMPOSITION: 5,100 ohms, 1 w; 01121 part no. GB5125; 30669 part no. 0203-3650	A-19
A1A1A5R38		RESISTOR, FIXED, FILM: 220 ohms, 3 w; 24546 part no. FP3; 30669 part no. 0239-0030	A-19
A1A1A5R39		Not Used	
A1A1A5R40		Same as A1A1A5R38	A-19
A1A1A5R41		Table 7-3; Item No. 14	A-19
A1A1A5R42		RESISTOR, FIXED, COMPOSITION: 18,000 ohms, 1/4 w; 01121 part no. CB1835; 30669 part no. 0235-4910	A-19
A1A1A5R43		RESISTOR, FIXED, COMPOSITION: 20,000 ohms, 1/4 w; 01121 part no. CB2035; 30669 part no. 0235-4920	A-19
A1A1A5R44		RESISTOR, FIXED, FILM: 10 ohms, 1/8 w; 91637 part no. MFF1/8T1; 30669 part no. 0238-9970	A-19
A1A1A5R45		Table 7-3; Item No. 16	A-19
A1A1A5R46		Same as A1A1A5R2	A-19
A1A1A5R47		Same as A1A1A5R2	A-19

TABLE A-4. OSCILLOSCOPE OS-246A(P)/U(A1), VERTICAL OUTPUT ASSEMBLY A1A1A5, PARTS LIST (CONT)

Reference Designation	Notes	Name and Description	Figure Number
A1A1A5R48		Same as A1A1A5R44	A-19
A1A1A5R49		RESISTOR, VARIABLE: 100 ohms; 32997 part no. 3329H-1-101; 30669 part no. 0109-6420	A-19
A1A1A5R50		Same as A1A1A5R23	A-19
A1A1A5R51		Same as A1A1A5R23	A-19
A1A1A5R52		Not Used	
A1A1A5R53		Not Used	
A1A1A5R54		RESISTOR, FIXED, COMPOSITION: 20 ohms, 1/4 w; 01121 part no. CB2005; 30669 part no. 0235-4210	A-19
A1A1A5R55		Same as A1A1A5R54	A-19
A1A1A5R56		RESISTOR, FIXED, WIRE WOUND: 143 ohms, 2 w; 91637 part no. RS2C; 30669 part no. 0236-2830	A-19
A1A1A5R57		Table 7-3; Item No. 30	A-19
A1A1A5R58		RESISTOR, FIXED, COMPOSITION: 39 ohms, 1/4 w; 01121 part no. CB3905; 30669 part no. 0235-4280	A-19
A1A1A5R59		Same as A1A1A5R58	A-19
A1A1A5XQ1 to A1A1A5XQ13		Same as A1A1A1A1XQ1	A-19

TABLE A-5. OSCILLOSCOPE OS-246A(P)/U(A1), DISPLAY PANEL ASSEMBLY A1A1A6, PARTS LIST

Reference Designation	Notes	Name and Description	Figure Number
A1A1A6		DISPLAY PANEL ASSEMBLY: 30669 part no. 8901-7784	A-20
A1A1A6LT1		LIGHT, INDICATOR: Green lens; 07137 part no. RCLB52-2187-000; 30669 part no. 1201-2610	A-20
A1A1A6MP1		CASTING, BEZEL: 30669 part no. 3507-7573 (Attaching Parts) B (2)	A-20
A1A1A6MP2		TERMINAL, FEEDTHRU: Insulated; 30669 part no. 5102-2750	A-20
A1A1A6MP3		Same as A1A1A6MP2	A-20
A1A1A6MP4		VERNIER DIAL, DELAY: Vernier, 30 turn; 32997 part no. H491-3; 30669 part no. 4501-1020	A-20
A1A1A6MP5		PANEL: 30669 part no. 3201-7711 (Attaching Parts) SCREW, MACHINE: Flat Head, no. 6-32 x 3/8 in. lg.; 30669 part no. 6009-6680 (1)	A-20
A1A1A6MP6		CLIP, RETAINING: 30669 part no. 3702-1220	A-20
A1A1A6MP7		RECEPTICLE: 30669 part no. 5102-2000	A-20
A1A1A6MP8		TERMINAL, LUG: 30669 part no. 5100-5240	A-20
A1A1A6MP9		PANEL: 30669 part no. 3201-7731 (Attaching Parts) SCREW, MACHINE: Flat head, cross recessed, thread forming, no. 6-32 x 5/16 in. lg.; 30669 part no. 6043-0510 (4)	A-20
A1A1A6MP10		CASTING, DISPLAY PANEL: 30669 part no. 3507-7573	A-20
A1A1A6R1		RESISTOR, VARIABLE: 5 megohm, ±30%, 71590 part no. Model 3 - 5 meg; 30669 part no. 0107-3521 (Attaching Parts) NUT, HEXAGON: No. 1/4-32, 5/16 A.F.; 30669 part no. 6103-4510 (1) WASHER, LOCK: Internal tooth, no. 1/4; 30669 part no. 6220-0070 (1)	A-20
A1A1A6R2		Not Used	A-20
A1A1A6R3		RESISTOR, VARIABLE: 2,000 ohms; 32997 part no. 3540S1-202; 30669 part no. 0109-4580 (Attaching Parts) H (1), O (1)	A-20
A1A1A6R4		RESISTOR, VARIABLE: 5,000 ohms, ±20%; 71590 part no. Model 3 - 5K PORM 20; 30669 part no. 0107-3501 (Attaching Parts) NUT, HEXAGON: No. 1/4-32, 5/16 A.F.; 30669 part no. 6103-4510 (1) WASHER, LOCK: Internal tooth, no. 1/4; 30669 part no. 6220-0070 (1)	A-20
A1A1A6R5		RESISTOR, VARIABLE: Dual, 10,000 ohms; 30669 part no. 0107-3481 (Attaching Parts) H (1), O (1)	A-20
A1A1A6R6		RESISTOR, VARIABLE; Part of A1A1A6R5	A-20
A1A1A6S1		SWITCH, TOGGLE: On-off; 95146 part no. MST105D; 30669 part no. 0503-2490	A-20
A1A1A6S2		SWITCH, PUSH: Spdt; 81073 part no. 46-101B; 30669 part no. 0503-2780 (Attaching Parts) NUT, HEXAGON: No. 1/4-32, 5/16 A.F.; 30669 part no. 6103-4510	A-20
A1A1A6S3		Same as A1A1A6S1	A-20
A1A1A6TB1		TERMINAL BOARD: 30669 part no. 4101-3361	A-20

TABLE A-6. OSCILLOSCOPE OS-246A(P)/U(A1), LOW VOLTAGE PRINTED CIRCUIT ASSEMBLY A1A2A6A1, PARTS LIST

Reference Designation	Notes	Name and Description	Figure Number
A1A2A6A1		PRINTED CIRCUIT ASSEMBLY, LOW VOLTAGE: 30669 part no. 8901-7817	A-21
A1A2A6A1CR1 to A1A2A6A1CR7		Same as A1A1A1A1CR1	
A1A2A6A1CR8		SEMICONDUCTOR DEVICE, DIODE: Zener; 04713 part no. 1N4764A; 30669 part no. 2601-0510	A-21 A-21
A1A2A6A1CR9		SEMICONDUCTOR DEVICE, DIODE: Zener; 04713 part no. 1N936A; 30669 part no. 2601-0500	A-21 A-21
A1A2A6A1CR10 to A1A2A6A1CR19		Same as A1A1A4CR1	A-21 A-21
A1A2A6A1CR20		SEMICONDUCTOR DEVICE, DIODE: ZENER; 04713 part no. 1N5250A; 30669 part no. 2601-1290	A-21
A1A2A6A1CR21		Same as A1A2A6A1CR20	A-21
A1A2A6A1CR22		Table 7-3; Item No. 43	A-21
A1A2A6A1CR23		Same as A1A2A6A1CR22	A-21
A1A2A6A1C1		CAPACITOR, FIXED, ELECTROLYTIC: 6.8 uf, 35 vdc; 56289 part no. 150D685X9035; 30669 part no. 0328-1250	A-21
A1A2A6A1C2		CAPACITOR, FIXED, FILM DIELECTRIC: 5,600 pf, 100 vdc; 56289 part no. 225P56291; 30669 part no. 0328-1346	A-21
A1A2A6A1C3		CAPACITOR, FIXED, MICA DIELECTRIC: 200 pf; 72136 part no. DM15-201J; 30669 part no. 0317-5350	A-21
A1A2A6A1C4		Not Used	A-21
A1A2A6A1C5		Same as A1A1A2C13	A-21
A1A2A6A1C6		Same as A1A2A6A1C1	A-21
A1A2A6A1C7		Same as A1A2A6A1C1	A-21
A1A2A6A1C8		Same as A1A2A6A1C2	A-21
A1A2A6A1C9		Same as A1A2A6A1C3	A-21
A1A2A6A1C10		Not Used	
A1A2A6A1C11		Same as A1A1A2C16	A-21
A1A2A6A1C12		Same as A1A1A3C3	A-21
A1A2A6A1C13		Same as A1A1A3C8	A-21
A1A2A6A1C14		Same as A1A2A6A1C3	A-21
A1A2A6A1C15		CAPACITOR, FIXED, ELECTROLYTIC: 100 uf, 50 vdc; 56289 part no. 30D107G050DH2: 30669 part no. 0328-1360	A-21
A1A2A6A1IC1		INTEGRATED CIRCUIT: 04713 part no. MC1709CG; 30669 part no. 2601-0490	A-21
A1A2A6A1IC2		Same as A1A2A6A1IC1	A-21
A1A2A6A1IC3		Same as A1A2A6A1IC1	A-21
A1A2A6A1MP1		TERMINAL, FORMED: 30669 part no. 5102-2800	A-21
A1A2A6A1MP2 to A1A2A6A1MP28		Same as A1A2A6A1MP1	A-21
A1A2A6A1MP29 to A1A2A6A1MP36		Same as A1A1A2MP39	A-21

TABLE A-6. OSCILLOSCOPE OS-246A(P)/U(A1), LOW VOLTAGE PRINTED CIRCUIT ASSEMBLY A1A2A6A1, PARTS LIST (CONT)

Reference Designation	Notes	Name and Description	Figure Number
A1A2A6A1MP37		PRINTED CIRCUIT BOARD: 30669 part no. 4003-1495	A-21
A1A2A6A1Q1		Same as A1A1A2Q7	A-21
A1A2A6A1Q2		Same as A1A1A2Q7	A-21
A1A2A6A1Q3		TRANSISTOR: NPN; 04713 part no. 2N3053; 30669 part no. 2601-0550	A-21
A1A2A6A1Q4		Table 7-3; Item No. 51	A-21
A1A2A6A1Q5		Same as A1A1A1A1Q1	A-21
A1A2A6A1Q6		TRANSISTOR: PNP; 04713 part no. 2N4890; 30669 part no. 2601-0560	A-21
A1A2A6A1R1		RESISTOR, VARIABLE: 500 ohms±10%, 1/2w; 84048 part no. 120-002500 PORM 10; 30669 part no. 0109-6330	A-21
A1A2A6A1R2		RESISTOR, FIXED, FILM: 8,450 ohms, ±1%; 1/8 w; 91637 part no. MFF1-8-8451T1; 30669 part no. 0238-9030	A-21
A1A2A6A1R3		RESISTOR, FIXED, FILM: 4,990 ohms, ±1%, 1/8 w; 91637 part no. MFF1-8-4991T1; 30669 part no. 0238-9010	A-21
A1A2A6A1R4		RESISTOR, FIXED, COMPOSITION: 820 ohms, 1/4 w; 01121 part no. CB8215; 30669 part no. 0235-4600	A-21
A1A2A6A1R5		Same as A1A1A2R27	A-21
A1A2A6A1R6		Same as A1A1A1A1R12	A-21
A1A2A6A1R7		Not Used	A-21
A1A2A6A1R8		Same as A1A2A6A1R7	A-21
A1A2A6A1R9		RESISTOR, FIXED, COMPOSITION: 200 ohms, 1/4 w; 01121 part no. CB2015; 30669 part no. 0235-4450	A-21
A1A2A6A1R10		RESISTOR, FIXED, COMPOSITION: 1,000 ohms, 1w: 01121 part no. GB1025; 30669 part no. 0203-3480	A-21
A1A2A6A1R11		RESISTOR, FIXED, WIREWOUND: 3ohms, ±5%, 2w; 84048 part no. BWH3PORM5-2W; 30669 part no. 0235-1360	A-21
A1A2A6A1R12		RESISTOR, FIXED, FILM: 7,150 ohms, ±1/2%, 1/8w; 91637 part no. MFF1-8-7151T2; 30669 part no. 0238-9330	A-21
A1A2A6A1R13		Same as A1A2A6A1R12	A-21
A1A2A6A1R14		Same as A1A1A2R27	A-21
A1A2A6A1R15		Same as A1A1A1A1R12	A-21
A1A2A6A1R16		Not Used	A-21
A1A2A6A1R17		Same as A1A2A6A1R7	A-21
A1A2A6A1R18		Same as A1A2A6A1R9	A-21
A1A2A6A1R19		RESISTOR, FIXED, WIREWOUND: 2.2 ohms, ±5%, 2w; 84048 part no. BWH2-2PORM5-2W; 30669 part no. 0235-1370	A-21
A1A2A6A1R20		Same as A1A2A6A1R10	A-21
A1A2A6A1R21		RESISTOR, FIXED, COMPOSITION: 3.9 megohm, 1/4 w; 01121 part no. CB3955; 30669 part no. 0235-5470	A-21
A1A2A6A1R22		RESISTOR, FIXED, FILM: 47,500 ohms, ±1/2%; 1/8 w; 91637 part no. MFF1-8-4752T2; 30669 part no. 0238-9340	A-21
A1A2A6A1R23		RESISTOR, FIXED, FILM: 3,570 ohms, ±1/2%; 1/8 w; 91637 part no. MFF1-8 3571T2; 30669 part no. 0238-9320	A-21
A1A2A6A1R24		Same as A1A2A6A1R23	A-21
A1A2A6A1R25		Same as A1A1A2R27	A-21
A1A2A6A1R26		Same as A1A1A1A1R12	A-21
A1A2A6A1R27		Same as A1A1A2R6	A-21
A1A2A6A1R28		RESISTOR, FIXED, COMPOSITION: 560 ohms, 1/4 w; 01121 part no. CB5615; 30669 part no. 0235-4560	A-21
A1A2A6A1R29		RESISTOR, FIXED, WIREWOUND: 10 ohms, 5 w; 56289 part no. 243E1005; 30669 part no. 0238-8540	A-21

TABLE A-6. OSCILLOSCOPE OS-246A(P)/U(A1), LOW VOLTAGE PRINTED CIRCUIT ASSEMBLY A1A2A6A1, PARTS LIST (CONT)

Reference Designation	Notes	Name and Description	Figure Number
A1A2A6A1R30		Same as A1A1A2R32	A-21
A1A2A6A1R31		Same as A1A1A2R68	A-21
A1A2A6A1R32		RESISTOR, FIXED, WIREWOUND: 7,000 ohms, 5w; 56289 part no. 243E7025;30669 part no. 0238-8550	A-21
A1A2A6A1R33		RESISTOR, FIXED, COMPOSITION: 10 ohms, 1/2 w; 01121 part no. EB1005; 30669 part no. 0203-0000	A-21
A1A2A6A1XQ1 to A1A2A6A1XQ6		Same as A1A1A1A1XQ1	A-21
A1A2A6A2		CABLE ASSEMBLY, LOW VOLTAGE POWER SUPPLY: 30669 part no. 5028-9931	A-21

TABLE A-7. OSCILLOSCOPE OS-246A(P)/U(A1), MAIN FRAME COVER A1A3, PARTS LIST

Reference Designation	Notes	Name and Description	Figure Number
A1A3		MAIN FRAME COVER: 30669 part no. 8901-7905	A-22
A1A3MP1		MAIN COVER ASSEMBLY: 30669 part no. 3507-7753	A-22
A1A3MP2		REAR COVER ASSEMBLY: 30669 part no. 3507-7759	A-22
A1A3MP3 to A1A3MP6		BUMPER, RECESSED: 30669 part no. 3801-8841 (Attaching Parts) SCREW, MACHINE: BH, No. 8-32 x 7/8 in. lg; 30669 part no. 6009-6290 (4) LOCKWASHER, INTERNAL TOOTH: No. 8;30669 part no. 6220-0040 (4)	A-22
A1A3MP7 to		BUMPER, RUBBER: 30669 part no. 3802-3120 (Attaching Parts) SCREW, MACHINE: BH, No. 8-32 x 3/8 in. lg; 30669 part no. 6009-6250 (5)	A-22
A1A3MP10		LOCKWASHER, INTERNAL TOOTH: No. 8;30669 part no. 6220-0040 (4)	A-22
A1A3MP11		SHIELD, CONETIC: 30669 part no. 4202-6551	A-22
A1A3MP12		HANDLE GRIP: 30669 part no. 6401-7002	A-22
A1A3MP13		REAR DOOR COVER: 30669 part no. 6401-7006 (Attaching Parts) FOAM, PAD, ADHESIVE BACK: 30669 part no. 7403-5891 (1)	A-22
A1A3MP14 to A1A3MP17		LATCH: 30669 part no. 6401-8290 (Attaching Parts) PIN: 30669 part no. 6401-8310 (4)	A-22
A1A3MP18		EXTRUSION, RUBBER: 30669 part no. 7000-3631	A-22
A1A3MP19 to A1A3MP20		FASTENER, KNURLED: 30669 part no.6401-8350 (Attaching Parts) WASHER, NYLON WARE: 30669 part no. 6201-2040 (2); RETAINER, SPLIT RING: 30669 part no. 3005-2200 (2)	A-22
A1A3MP21 to A1A3MP24		SEALING CAP: 30669 part no. 6401-8370	A-22
A1A3MP25		HANDLE: 30669 part no. 6401-7016	A-22
A1A3MP26		SPACER: 30669 part no. 6401-7015	A-22
A1A3MP27		END COVER: 30669 part no. 6401-7014 (Attaching Parts) SCREW, CUP WASHER: 30669 part no. 6011-1730 (2)	A-22
A1A3MP28		Same as A1A3MP26	A-22
A1A3MP29		Same as A1A3MP27	A-22

TABLE A-8. DUAL TRACE OSCILLOSCOPE PLUG-IN UNIT AM-6566A/U(A2), LOGIC PRINTED CIRCUIT ASSEMBLY A2A3, PARTS LIST

Reference Designation	Notes	Name and Description	Figure Number
A2A3		PRINTED CIRCUIT ASSEMBLY, LOGIC: 30669 part no. 8901-7803	A-23
A2A3CR1		Same as A1A1A3CR5	A-23
A2A3CR2		SEMICONDUCTOR DEVICE, DIODE: Zener; 71590 part no. 1N749A; 30669 part no. 2601-0620	A-23
A2A3CR3 to A2A3CR12		Same as A1A1A1A1CR1	A-23
A2A3C1		Same as A1A1A5C10	A-23
A2A3C2		Same as A1A1A5C10	A-23
A2A3C3		Same as A1A1A2C1	A-23
A2A3C4		Same as A1A1A2C3	A-23
A2A3C5		Same as A1A1A2C1	A-23
A2A3C6		Same as A1A1A2C3	A-23
A2A3C7		CAPACITOR, FIXED, MICA DIELECTRIC: 75 pf, ±5%, 500 vdc; 72136 part no. DM15-750J; 30669 part no. 0317-5250	A-23
A2A3C8		Not Used	A-23
A2A3C9		Not Used	A-23
A2A3C10 to A2A3C12		Same as A1A1A2C1	A-23
A2A3C13		CAPACITOR, FIXED, MICA DIELECTRIC: 200 pf, ±5%, 500 vdc; 72136 part no. DM15-201J; 30669 part no. 0317-5350	A-23
A2A3C14 to A2A3C16		Same as A2A3C13	A-23
A2A3IC1		INTEGRATED CIRCUIT: 18714 part no. CA3046, 30669 part no. 2601-0610	A-23
A2A3L1		Table 7 - 3; Item No. 10	A-23
A2A3L2		Not Used	A-23
A2A3L3		Table 7 - 3; Item No. 10	A-23
A2A3L4		Not Used	A-23
A2A3L5		Table 7 - 3; Item No. 1	A-23
A2A3L6		Table 7 - 3; Item No. 1	A-23
A2A3MP1		PRINTED CIRCUIT BOARD: 30669 part no. 4003-1530	A-23
A2A3MP2		PIN, FORMED: 30669 part no. 5102-2760	A-23
A2A3MP3		TERMINAL, FORMED: 30669 part no. 5102-2800	A-23
A2A3MP4 to A2A3MP22		Same as A2A3MP3	A-23
A2A3MP23 to A2A3MP36		Same as A1A1A2MP36	A-23
A2A3Q1		Same as A1A1A1A1Q1	A-23
A2A3Q2		Same as A1A1A1A1Q1	A-23
A2A3Q3		Table 7-3; Item No. 50	A-23
A2A3Q4		Same as A1A1A1A1Q1	A-23
A2A3Q5		Same as A1A1A1A1Q1	A-23

TABLE A-8. DUAL TRACE OSCILLOSCOPE PLUG-IN UNIT AM-6566A/U(A2), LOGIC PRINTED CIRCUIT ASSEMBLY A2A3, PARTS LIST (CONT)

Reference Designation	Notes	Name and Description	Figure Number
A2A3Q6 to A2A3Q9		Not Used	A-23
A2A3Q10		Same as A1A1A1A1Q1	A-23
A2A3Q11		Same as A1A1A1A1Q1	A-23
A2A3R1		RESISTOR, VARIABLE: 10,000 ohms; 32997 part no. 3329H1103; 30669 part no. 0109-6520	A-23
A2A3R2		Same as A1A1A2R23	A-23
A2A3R3		RESISTOR, FIXED, COMPOSITION: 62,000 ohms, 1/4 w; 01121 part no. CB6235; 30669 part no. 0235-5040	A-23
A2A3R4		Same as A1A1A2R35	A-23
A2A3R5		RESISTOR, FIXED, FILM: 562 ohms, ±1%, 1/8 w; 91637 part no. MFF1-8-5620T1; 30669 part no. 0238-9460	A-23
A2A3R6		Same as A2A3R5	A-23
A2A3R7		Same as A1A2A6A1R28	A-23
A2A3R8		Same as A1A1A2R35	A-23
A2A3R9		Same as A1A1A1A1R25	A-23
A2A3R10		Same as A1A1A2R35	A-23
A2A3R11		Same as A1A1A2R35	A-23
A2A3R12		Same as A1A1A5R42	A-23
A2A3R13		Same as A1A1A5R42	A-23
A2A3R14		RESISTOR, FIXED, COMPOSITION: 9,100 ohms, 1/4 w; 01121 part no. CB9125; 30669 part no. 0235-4840	A-23
A2A3R15		Same as A1A1A2R44	A-23
A2A3R16		Same as A1A1A2R23	A-23
A2A3R17		Same as A1A2A6A1R7	A-23
A2A3R18		RESISTOR, FIXED, COMPOSITION: 390 ohms, 1/4 w; 01121 part no. CB3915; 30669 part no. 0235-4520	A-23
A2A3R19		Same as A1A1A1A1R1	A-23
A2A3R20		RESISTOR, FIXED, COMPOSITION: 62 ohms, 1/4 w; 01121 part no. CB6205; 30669 part no. 0235-4330	A-23
A2A3R21		Same as A1A2A6A1R7	7-16
A2A3R22		Not Used	7-16
A2A3R23		Same as A1A1A2R35	7-16
A2A3R24		Same as A1A1A2R35	7-16
A2A3R25		Same as A1A1A5R6	7-16
A2A3R26		Not Used	7-16
A2A3R27		Same as A1A1A2R68	7-16
A2A3R28		Same as A1A1A2R68	7-16
A2A3R29		Same as A1A1A1A1R1	7-16
A2A3R30		Same as A1A1A1A1R1	7-16
A2A3R31		Same as A1A1A2R23	7-16
A2A3R32		Same as A1A1A2R23	7-16
A2A3R33		Same as A1A1A5R21	7-16
A2A3R34		Same as A1A1A2R64	7-16
A2A3R35		Same as A1A1A2R64	7-16
A2A3R36		Same as A1A1A1A1R19	7-16
A2A3R37		Same as A1A1A1A1R19	
A2A3R38		Same as A1A1A5R6	

TABLE A-8. DUAL TRACE OSCILLOSCOPE PLUG-IN UNIT AM-6566A/U(A2), LOGIC PRINTED CIRCUIT ASSEMBLY A2A3, PARTS LIST (CONT)

Reference Designation	Notes	Name and Description	Figure Number
A2A3R39		Same as A1A1A2R23	A-23
A2A3R40		Same as A1A1A2R23	A-23
A2A3R41		Same as A1A1A5R6	A-23
A2A3R42		Same as A1A1A2R35	A-23
A2A3R43		Same as A1A1A2R35	A-23
A2A3XIC1		SOCKET, INTEGRATED CIRCUIT: 91506 part no. 314AG5D2R; 30669 part no. 3401-1030	A-23
A2A3XQ1 to A2A3XQ5		Same as A1A1A1A1XQ1	A-23
A2A3XQ6 to A2A3XQ9		Not Used	7-16
A2A3XQ10		Same as A1A1A1A1XQ1	A-23
A2A3XQ11		Same as A1A1A1A1XQ1	A-23

TABLE A-9. DUAL TRACE OSCILLOSCOPE PLUG-IN UNIT AM-6566A/U(A2), VERTICAL PREAMPLIFIER A2A6, PARTS LIST

Reference Designation	Notes	Name and Description	Figure Number
A2A6		VERTICAL PRE-AMPLIFIER: 30669 part no. 8901-7788	A-24
A2A6CR1		Table 7-3; Item No. 46	A-24
A2A6CR2 to A2A6CR16		Same as A2A6CR1	A-24
A2A6CR17 to A2A6CR20		Same as A1A1A1A1CR1	A-24
A2A6C1		Same as A1A1A2C3	A-24
A2A6C2		Same as A1A1A2C3	A-24
A2A6C3		CAPACITOR, FIXED, MICA DIELECTRIC: 20pf, ±5%, 72136 part no. DM15-200J;30669 part no. 0317-5100	A-24 A-24
A2A6C4		Table 7-3; Item No. 3	A-24
A2A6C5		Same as A2A6C4	A-24
A2A6C6 to A2A6C8		Not Used	A-24
A2A6C9		CAPACITOR, FIXED, MICA DIELECTRIC: 33 pf, ±5%, 500 vdc; 72136 part no. DM15-330J; 30669 part no. 0317-5150	A-24 A-24
A2A6C10		Same as A2A6C4	A-24
A2A6C11		Same as A2A6C4	A-24
A2A6C12		Same as A1A1A2C1	A-24
A2A6C13		Same as A1A1A2C1	A-24
A2A6C14		Same as A1A1A2C3	A-24
A2A6C15		Same as A1A1A2C3	A-24
A2A6C16		Same as A2A6C4	A-24
A2A6C17		Same as A2A6C4	A-24
A2A6C18		Same as A2A6C3	A-24
A2A6C19		Same as A1A1A2C1	A-24
A2A6C20		Same as A1A1A2C1	A-24
A2A6C21		Same as A2A6C4	A-24
A2A6C22		Same as A2A6C4	A-24
A2A6C23 to A2A6C25		Not Used	A-24
A2A6C26		Same as A1A1A2C1	A-24
A2A6C27		Not Used	A-24
A2A6C28		Not Used	A-24
A2A6C29		Same as A2A6C9	A-24
A2A6C30 to A2A6C35		Not Used	A-24
A2A6C36		CAPACITOR, VARIABLE, CERAMIC DIELECTRIC: 5.5-18 pf; 18796 part no. 538-011A5-5-18PF; 30669 part no. 0327-3610	A-24
A2A6C37		Same as A2A6C36	A-24
A2A6IC1		Same as A2A3IC1	A-24
A2A6IC2		Same as A2A3IC1	A-24

TABLE A-9. DUAL TRACE OSCILLOSCOPE PLUG-IN UNIT AM-6566A/U(A2), VERTICAL PREAMPLIFIER A2A6, PARTS LIST (CONT)

Reference Designation	Notes	Name and Description	Figure Number
A2A6L1		Table 7 - 3; Item No. 11	A-24
A2A6L2 to A2A6L5		Table 7 - 3; Item No. 1	A-24
A2A6L6		Table 7 - 3; Item No. 11	A-24
A2A6L7		Table 7 - 3; Item No. 10	A-24
A2A6L8		Table 7 - 3; Item No. 10	A-24
A2A6L9		Table 7 - 3; Item No. 11	A-24
A2A6L10		Table 7 - 3; Item No. 11	A-24
A2A6MP1		PIN, CONTACT: 30669 part no. 5102-2760	A-24
A2A6MP2 to A2A6MP26		Same as A2A6MP1	A-24
A2A6MP27		TERMINAL, FORMED: 30669 part no. 5102-2800	A-24
A2A6MP28 to A2A6MP60		Same as A2A6MP27	A-24
A2A6MP61		NUT, SELF-LOCKING: 30669 part no. 6103-5671	A-24
A2A6MP62		Same as A2A6MP61	A-24
A2A6MP63 to A2A6MP84		Same as A1A1A2MP39	A-24
A2A6MP85		PRINTED CIRCUIT BOARD: 30669 part no. 4003-1571	A-24
A2A6Q1		TRANSISTOR: Dual; 04713 part no. 2N3424; 30669 part no. 2601-0250	A-24
A2A6Q2		Same as A2A6Q1	A-24
A2A6Q3		Same as A1A1A1A1Q5	A-24
A2A6Q4		Not Used	A-24
A2A6Q5		Not Used	A-24
A2A6Q6 to A2A6Q9		Same as A2A3Q3	A-24
A2A6Q10 to A2A6Q13		Same as A1A1A1A1Q1	A-24
A2A6Q14		Same as A2A6Q1	A-24
A2A6Q15		Same as A2A6Q1	A-24
A2A6Q16		Same as A1A1A1A1Q5	A-24
A2A6Q17		Not Used	A-24
A2A6Q18		Not Used	A-24
A2A6Q19 to A2A6Q22		Same as A2A3Q3	A-24
A2A6Q23		Same as A1A1A1A1Q1	A-24
A2A6Q24		Same as A1A1A1A1Q1	A-24
A2A6R1		Same as A1A1A1A1R12	A-24
A2A6R2		Same as A1A1A2R44	A-24
A2A6R3		Same as A1A1A2R44	A-24
A2A6R4		Same as A1A1A1A1R12	A-24
A2A6R5		Table 7-3; Item No. 40	A-24
A2A6R6		RESISTOR, FIXED, FILM: 2,000 ohms, ±1%, 1/8w; 91637 part no. MFF1-8-2001T1; 30669 part no. 0238-9450	A-24

TABLE A-9. DUAL TRACE OSCILLOSCOPE PLUG-IN UNIT AM-6566A/U(A2), VERTICAL PREAMPLIFIER A2A6, PARTS LIST (CONT)

Reference Designation	Notes	Name and Description	Figure Number
A2A6R7		Same as A1A1A3R15	A-24
A2A6R8		RESISTOR, FIXED, FILM: 30.1 ohms, ±1%, 1/8w; 91637 part no. MFF1-8-30R1T1; 30669 part no. 0238-8730	A-24
A2A6R9		Same as A2A6R8	A-24
A2A6R10		Same as A1A1A3R15	A-24
A2A6R11		Not Used	A-24
A2A6R12		RESISTOR, FIXED, FILM: 301 ohms, ±1%, 1/8w; 91637 part no. MFF1-8-3010T1; 30669 part no. 0238-8820	A-24
A2A6R13		RESISTOR, FIXED, COMPOSITION: 75 ohms, 1/4w; 01121 part no. CB7505; 30669 part no. 0235-4350	A-24
A2A6R14		Same as A1A1A2R14	A-24
A2A6R15		Same as A1A1A2R14	A-24
A2A6R16		Same as A1A2A6A1R7	A-24
A2A6R17		Not Used	A-24
A2A6R18		Not Used	A-24
A2A6R19		Same as A1A1A2R20	A-24
A2A6R20		Same as A2A6R5	A-24
A2A6R21		Table 7-3; Item No. 39	A-24
A2A6R22		Same as A2A6R21	A-24
A2A6R23		Same as A2A6R21	A-24
A2A6R24		Same as A2A6R5	A-24
A2A6R25		Same as A1A1A2R35	A-24
A2A6R26		Same as A1A1A2R35	A-24
A2A6R27		Not Used	A-24
A2A6R28		Not Used	A-24
A2A6R29		RESISTOR, FIXED, COMPOSITION: 20 ohms, 1/4w; 01121 part no. CB2005; 30669 part no. 0235-4210	A-24
A2A6R30		Same as A2A6R29	A-24
A2A6R31		Same as A2A6R21	A-24
A2A6R32		Same as A2A6R21	A-24
A2A6R33		Same as A1A1A2R14	A-24
A2A6R34		Same as A2A3R18	A-24
A2A6R35		Same as A2A3R18	A-24
A2A6R36 to A2A6R39		Not Used	A-24
A2A6R40		RESISTOR, VARIABLE: 100,000 ohms; 32997 part no. 3329H1104; 30669 part no. 0109-6460	A-24
A2A6R41		RESISTOR, FIXED, COMPOSITION: 100 ohms, 1/8w; 01121 part no. BB1015; 30669 part no. 0203-8870	A-24
A2A6R42		Same as A2A6R41	A-24
A2A6R43		RESISTOR, FIXED, COMPOSITION: 15,000 ohms, 1 w; 01121 part no. GB1535; 30669 part no. 0203-3760	A-24
A2A6R44		RESISTOR, FIXED, COMPOSITION: 510 ohms, 1/8w; 01121 part no. BB5115; 30669 part no. 0203-8880	A-24
A2A6R45		Same as A2A6R44	A-24
A2A6R46		RESISTOR, FIXED, COMPOSITION: 510 ohms, 1/4w, 01121 part no. CB5115; 30669 part no. 0235-4550	A-24
A2A6R47		RESISTOR, FIXED, FILM: 93.1 ohms, ±1%, 1/8w; 91637 part no. MFF1-8-93R1T1; 30669 part no. 0238-9250	A-24
A2A6R48		Same as A2A6R47	A-24

TABLE A-9. DUAL TRACE OSCILLOSCOPE PLUG-IN UNIT AM-6566A/U(A2), VERTICAL PREAMPLIFIER A2A6, PARTS LIST (CONT)

Reference Designation	Notes	Name and Description	Figure Number
A2A6R49 to A2A6R51		Not Used	A-24
A2A6R52		Same as A1A1A5R33	A-24
A2A6R53		RESISTOR, FIXED, FILM: 511 ohms, ±1%, 1/8w; 91637 part no. MFF1-8-5110T1; 30669 part no. 0238-9640	A-24 A-24
A2A6R54		RESISTOR, VARIABLE: 200 ohms; 32997 part no. 3329H1201; 30669 part no. 0109-6430	A-24 A-24
A2A6R55		Same as A2A6R53	A-24
A2A6R56		Same as A1A1A2R14	A-24
A2A6R57		Not Used	A-24
A2A6R58		Not Used	A-24
A2A6R59		Same as A1A1A1A1R12	A-24
A2A6R60		Same as A1A1A2R44	A-24
A2A6R61		Same as A1A1A2R44	A-24
A2A6R62		RESISTOR, FIXED, FILM: 715 ohms, ±1%, 1/8w; 91637 part no. MFF1-8-7150T1; 30669 part no. 0238-9430	A-24 A-24
A2A6R63		Same as A2A6R62	A-24
A2A6R64		Same as A1A1A1A1R12	A-24
A2A6R65		Same as A2A6R5	A-24
A2A6R66		Same as A2A6R6	A-24
A2A6R67		Same as A1A1A3R15	A-24
A2A6R68		Same as A2A6R8	A-24
A2A6R69		Same as A2A6R8	A-24
A2A6R70		Same as A1A1A3R15	A-24
A2A6R71		Not Used	A-24
A2A6R72		Same as A2A6R12	A-24
A2A6R73		Same as A1A1A2R14	A-24
A2A6R74		Same as A2A6R13	A-24
A2A6R75		Same as A1A1A2R14	A-24
A2A6R76		Same as A1A2A6A1R7	A-24
A2A6R77		Not Used	A-24
A2A6R78		Not Used	A-24
A2A6R79		Same as A1A1A2R20	A-24
A2A6R80		Same as A2A6R5	A-24
A2A6R81 to A2A6R83		Same as A2A6R21	A-24
A2A6R84		Same as A2A6R5	A-24
A2A6R85		Same as A1A1A2R35	A-24
A2A6R86		Same as A1A1A2R35	A-24
A2A6R87		Not Used	A-24
A2A6R88		Not Used	A-24
A2A6R89		Same as A2A6R29	A-24
A2A6R90		Same as A2A6R29	A-24
A2A6R91		Same as A2A6R21	A-24
A2A6R92		Same as A2A6R21	A-24
A2A6R93		Same as A1A1A2R14	A-24
A2A6R94		Same as A2A3R18	A-24
A2A6R95		Not Used	A-24
A2A6R96		Not Used	A-24

TABLE A-9. DUAL TRACE OSCILLOSCOPE PLUG-IN UNIT AM-6566A/U(A2), VERTICAL PREAMPLIFIER A2A6, PARTS LIST (CONT)

Reference Designation	Notes	Name and Description	Figure Number
A2A6R97		Same as A2A3R18	A-24
A2A6R98		Not Used	A-24
A2A6R99		Not Used	A-24
A2A6R100		Same as A2A6R41	A-24
A2A6R101		Same as A2A6R40	A-24
A2A6R102		Same as A2A6R41	A-24
A2A6R103		Same as A2A6R43	A-24
A2A6R104		Same as A2A6R44	A-24
A2A6R105		Same as A2A6R44	A-24
A2A6R106 to A2A6R108		Not Used	A-24
A2A6R109		Same as A1A1A5R33	A-24
A2A6R110		RESISTOR, FIXED, FILM: 619 ohms, ±1%, 1/8w; 91637 part no. MFF1-8-6190T1; 30669 part no. 0238-9570	A-24
A2A6R111		Same as A2A6R110	A-24
A2A6R112		Same as A1A1A2R14	A-24
A2A6R113		Not Used	A-24
A2A6R114		Not Used	A-24
A2A6R115		RESISTOR, FIXED, FILM: 866 ohms, ±1%, 1/4w; 91637 part no. MFF 1/4-8660-T1; 30669 part no. 0238-9270	A-24
A2A6R116		Same as A2A6R115	A-24
A2A6R117		RESISTOR, FIXED, FILM: 3,010 ohms, ±1%, 1/8w; 91637 part no. MFF1-8-3011T1; 30669 part no. 0238-8880	A-24
A2A6R118		Same as A2A6R117	A-24
A2A6R119 to A2A6R126		Not Used	A-24
A2A6R127		Same as A1A1A2R66	A-24
A2A6T1		INDUCTOR ASSEMBLY: 30669 part no. 2101-9561	A-24
A2A6T2		Same as A2A6T1	A-24
A2A6XIC1		Same as A2A3XIC1	A-24
A2A6XIC2		Same as A2A3XIC1	A-24
A2A6XQ1 to A2A6XQ3		Same as A1A1A1A1XQ1	A-24
A2A6XQ4		Not Used	A-24
A2A6XQ5		Not Used	A-24
A2A6XQ6 to A2A6XQ16		Same as A1A1A1A1XQ1	A-24
A2A6XQ17		Not Used	A-24
A2A6XQ18		Not Used	A-24
A2A6XQ19 to A2A6XQ24		Same as A1A1A1A1XQ1	A-24

TABLE A-10. TIME BASE DELAY OSCILLOSCOPE PLUG-IN UNIT TD-1086A/U(A3), MAIN SWEEP ASSEMBLY A3A2, PARTS LIST

Reference Designation	Notes	Name and Description	Figure Number
A3A2		MAIN SWEEP ASSEMBLY: 30669 part no. 8901-7782 (Attaching Parts) B(5); N(5)	A-25
A3A2CR1		Same as A1A1A2CR21	A-25
A3A2CR2		Same as A1A1A2CR21	A-25
A3A2CR3		Same as A1A1A3CR5	A-25
A3A2CR4 to A3A2CR10		Same as A1A1A1A1CR1	A-25
A3A2CR11		SEMICONDUCTOR DEVICE, DIODE: Tunnel; 03508 part no. 1N3717; 30669 part no. 2600-8150	A-25
A3A2CR12 to A3A2CR15		Same as A1A1A1A1CR1	A-25
A3A2CR16		Same as A3A2CR11	A-25
A3A2CR17 to A3A2CR33		Same as A1A1A1A1CR1	A-25
A3A2CR34		Same as A1A1A3CR5	A-25
A3A2CR35		Same as A1A1A3CR5	A-25
A3A2CR36		Table 7 - 3; Item No. 43	A-25
A3A2CR37		Same as A3A2CR36	A-25
A3A2C1		CAPACITOR, VARIABLE: 1.5-11.6pf: 74970 part no. 189-504-5; 30669 part no. 0328-1130	A-25
A3A2C2		Same as A1A1A2C3	A-25
A3A2C3		Same as A1A1A2C3	A-25
A3A2C4		Same as A3A1C7	A-25
A3A2C5		Same as A2A7A2CR16	A-25
A3A2C6		CAPACITOR, FIXED, MICA DIELECTRIC: 150pf, ±5%, 500vdc; 72136 part no. DM15-1511: 30669 part no. 0317-5320	A-25
A3A2C7 to A3A2C9		Same as A1A1A2C1	A-25
A3A2C10		Same as A3A1C7	A-25
A3A2C11		Same as A1A1A2C1	A-25
A3A2C12		CAPACITOR, FIXED, MICA DIELECTRIC: 100 pf, ±5%, 500 vdc; 72136 part no. DM15-101J; 30669 part no. 0317-5280	A-25
A3A2C13		CAPACITOR, FIXED, CERAMIC DIELECTRIC: 100,000pf, 50vdc; 56289 part no. 5C50A; 30669 part no. 0327-3270	A-25
A3A2C14		CAPACITOR, FIXED, MICA DIELECTRIC: 47pf, ±5%, 500vdc; 72136 part no. DM15-470J; 30669 part no. 0317-5190	A-25
A3A2C15		Same as A1A1A2C3	A-25
A3A2C16		Same as A1A1A2C3	A-25
A3A2C17		Same as A3A1C7	A-25
A3A2C18		CAPACITOR, FIXED, MICA DIELECTRIC: 560pf, ±5%, 500vdc; 72136 part no. DM15-561J; 30669 part no. 0317-5760	A-25
A3A2C19		CAPACITOR, FIXED, MICA DIELECTRIC: 56pf, ±5%, 500vdc; 72136 part no. DM15-560J; 30669 part no. 0317-5220	A-25
A3A2C20		Same as A1A1A2C1	A-25
A3A2C21		CAPACITOR, FIXED, MICA DIELECTRIC: 10pf, ±5%, 500vdc; 72136 part no. DM15-100J; 30669 part no. 0317-5060	A-25

TABLE A-10. TIME BASE DELAY OSCILLOSCOPE PLUG-IN UNIT TD-1086A/U(A3), MAIN SWEEP ASSEMBLY A3A2, PARTS LIST (CONT)

Reference Designation	Notes	Name and Description	Figure Number
A3A2C22		Same as A1A1A2C16	A-25
A3A2C23		CAPACITOR, FIXED, MICA DIELECTRIC: 330pf, ±5%, 500vdc; 72136 part no. DM15-331J; 30669 part no. 0317-5410	A-25
A3A2C24		Same as A1A1A2C1	A-25
A3A2C25		Table 7-3; Item No. 6	A-25
A3A2C26		Same as A1A1A2C13	A-25
A3A2C27		Same as A1A1A2C1	A-25
A3A2C28		Same as A3A2C25	A-25
A3A2L1 to A3A2L3		Same as A1A1A2L1	A-25
A3A2L4		Table 7 - 3; Item No. 1	A-25
A3A2L5		Table 7 - 3; Item No. 1	A-25
A3A2L6		Not Used	A-25
A3A2L7		Same as A1A1A2L1	A-25
A3A2L8		Same as A1A1A2L1	A-25
A3A2MP1		BOARD, PRINTED CIRCUIT: 30669 part no. 4003-1404	A-25
A3A2MP2		RETAINER, CAPACITOR: 74970 part no. 115-189; 30669 part no. 3601-1450	A-25
A3A2MP3		TERMINAL, FEEDTHRU: Teflon; 30669 part no. 5102-2730	A-25
A3A2MP4		Same as A3A2MP3	A-25
A3A2MP5		PIN, FORMED: 30669 part no. 5102-2760	A-25
A3A2MP6 to A3A2MP9		Same as A3A2MP5	A-25
A3A2MP10		SOCKET, LEAD: 30669 part no. 5102-2790	A-25
A3A2MP11		Same as A3A2MP10	A-25
A3A2MP12		TERMINAL, FORMED: 30669 part no. 5102-2800	A-25
A3A2MP13 to A3A2MP51		Same as A3A2MP12	A-25
A3A2MP52 to A3A2MP85		Same as A1A1A2MP39	A-25
A3A2Q1		TRANSISTOR: Field Effect; 17896 part no. 2N4340: 30669 part no. 2601-0440	A-25
A3A2Q2		Same as A1A1A1A1Q1	A-25
A3A2Q3		Same as A1A1A1A1Q5	A-25
A3A2Q4		TRANSISTOR: NPN; 18714 part no. 2N5179; 30669 part no. 2601-0210	A-25
A3A2Q5		Same as A3A2Q4	A-25
A3A2Q6		TRANSISTOR: PNP; 07263 part no. 2N4313; 30669 part no. 2601-0130	A-25
A3A2Q7		Same as A3A2Q6	A-25
A3A2Q8		Same as A3A2Q4	A-25
A3A2Q9		Same as A1A2A6A1Q4	A-25
A3A2Q10		TRANSISTOR: PNP; 07263 part no. 2N4250; 30669 part no. 2601-0140	A-25
A3A2Q11		TRANSISTOR: NPN; 04713 part no. 2N4410; 30669 part no. 2601-0280	A-25
A3A2Q12		Same as A2A3Q3	A-25
A3A2Q13		TRANSISTOR: PNP; 07263 part no. 2N4917; 30669 part no. 2601-0460	A-25
A3A2Q14		TRANSISTOR: PNP; 04713 part no. 2N964; 30669 part no. 2601-0270	A-25
A3A2Q15		Same as A1A2A6A1Q4	A-25

TABLE A-10. TIME BASE DELAY OSCILLOSCOPE PLUG-IN UNIT TD-1086A/U(A3), MAIN SWEEP ASSEMBLY A3A2, PARTS LIST (CONT)

Reference Designation	Notes	Name and Description	Figure Number
A3A2Q16		Same as A1A2A6A1Q4	A-25
A3A2Q17		Same as A1A1A3Q1	A-25
A3A2Q18		Same as A3A2Q11	A-25
A3A2Q19		Same as A3A2Q1	A-25
A3A2Q20		Same as A1A1A3Q1	A-25
A3A2Q21		Same as A3A2Q10	A-25
A3A2Q22		Same as A3A2O10	A-25
A3A2R1		RESISTOR, VARIABLE: 500 ohms, ±10%; 32997 part no. 3345P1-501; 30669 part no. 0109-6330	A-25
A3A2R2		RESISTOR, VARIABLE: 5,000 ohms, ±10%; 32997 part no. 3345P1-502 30669 part no. 0109-6340	A-25
A3A2R3		RESISTOR, VARIABLE; 20,000ohms,±10%; 32997 part no. 3345P1-203; 30669 part no. 0109-6350	A-25
A3A2R4		Same as A1A1A2R5	A-25
A3A2R5		RESISTOR, FIXED, FILM: 1 Megohm, 1/4w; 91637 part no. RN60D1005F; 30669 part no. 0243-4800	A-25
A3A2R6		Same as A2A7A2R19	A-25
A3A2R7		Same as A1A1A2R68	A-25
A3A2R8		Same as A1A1A3R14	A-25
A3A2R9		Table 7-3; Item No. 20	A-25
A3A2R10		Same as A1A1A1A1R12	A-25
A3A2R11		Same as A1A1A5R33	A-25
A3A2R12		RESISTOR, FIXED, COMPOSITION: 360 ohms, 1/4w; 01121 part no. CB3615; 30669 part no. 0235-4510	A-25
A3A2R13		Same as A3A2R83	A-25
A3A2R14		Not Used	
A3A2R15		Same as A1A1A2R32	A-25
A3A2R16		Not Used	
A3A2R17		Same as A1A1A1A1R19	A-25
A3A2R18		RESISTOR, FIXED, COMPOSITION: 5100 ohms, 1/4w; 01121 part no. CB5125; 30669 part no. 0235-4780	A-25
A3A2R19		Same as A1A1A2R23	A-25
A3A2R20		RESISTOR, FIXED, COMPOSITION: 270 ohms, 1/4w; 01121 part no. CB2715; 30669 part no. 0235-4480	A-25
A3A2R21		Same as A1A2A6A1R7	A-25
A3A2R22		Same as A1A1A5R33	A-25
A3A2R23		RESISTOR, FIXED, COMPOSITION: 120,000 ohms, 1/4w; 01121 part no. CB1245; 30669 part no. 0235-5110	A-25
A3A2R24		Same as A3A2R23	A-25
A3A2R25		Same as A1A1A5R33	A-25
A3A2R26		RESISTOR, FIXED, COMPOSITION: 27,000 ohms, 1/2w; 01121 part no. EB2735; 30669 part no. 0203-0820	A-25
A3A2R27		Same as A1A1A2R68	A-25
A3A2R28		Same as A1A1A2R68	A-25
A3A2R29		Same as A1A1A1A1R21	A-25
A3A2R30		Same as A1A1A2R1	A-25
A3A2R31		Not Used	A-25
A3A2R32		RESISTOR, FIXED, COMPOSITION: 68 ohms, 1/4w; 01121 part no. CB6805; 30669 part no. 0235-4340	A-25
A3A2R33		Same as A1A1A1A1R1	A-25
A3A2R34		Same as A1A1A2R68	A-25

TABLE A-10. TIME BASE DELAY OSCILLOSCOPE PLUG-IN UNIT TD-1086A/U(A3), MAIN SWEEP ASSEMBLY A3A2, PARTS LIST (CONT)

Reference Designation	Notes	Name and Description	Figure Number
A3A2R35		RESISTOR, FIXED, COMPOSITION: 43,000 ohms, 1/2w; 01121 part no. EB4335; 30669 part no. 0203-0870	A-25
A3A2R36		Same as A1A1A2R68	A-25
A3A2R37		RESISTOR, FIXED, COMPOSITION: 6,200 ohms, 1/4w; 01121 part no. CB6225; 30669 part no. 0235-4800	A-25
A3A2R38		Same as A1A1A1A1R17	A-25
A3A2R39		Table 7-3; Item No. 18	A-25
A3A2R40		Same as A3A2R37	A-25
A3A2R41		Same as A1A1A2R3	A-25
A3A2R42		Same as A1A1A1A1R9	A-25
A3A2R43		Same as A1A2A6A1R9	A-25
A3A2R44		Not Used	A-25
A3A2R45		Same as A1A1A1A1R24	A-25
A3A2R46		RESISTOR, FIXED, COMPOSITION: 4,300 ohms, 1/4w; 01121 part no. CB4325; 30669 part no. 0235-4760	A-25
A3A2R47		Same as A1A1A5R6	A-25
A3A2R48		Same as A1A1A2R44	A-25
A3A2R49		Same as A1A1A3R20	A-25
A3A2R50		RESISTOR, FIXED, COMPOSITION: 1,300 ohms, 1/4w; 01121 part no. CB1325; 30669 part no. 0237-6280	A-25
A3A2R51		RESISTOR, FIXED, COMPOSITION: 750 ohms, 1/2w; 01121 part no. EB7515; 30669 part no. 0203-0450	A-25 A-25
A3A2R52		Not Used	A-25
A3A2R53		Table 7-3; Item No. 19	A-25
A3A2R54		Same as A1A1A5R6	A-25
A3A2R55		RESISTOR, FIXED, COMPOSITION: 330 ohms, 1/4w; 01121 part no. CB3315; 30669 part no. 0235-4500	A-25
A3A2R56		Same as A1A1A2R35	A-25
A3A2R57		Same as A1A1A2R44	A-25
A3A2R58		Same as A1A1A3R14	A-25
A3A2R59		Same as A1A1A2R68	A-25
A3A2R60		Same as A2A6R43	A-25
A3A2R61		RESISTOR, FIXED, FILM: 3,750 ohms, ±1%, 1/8w; 91637 part no. MFF1-8-3571T1; 30669 part no. 0238-8890	A-25
A3A2R62		Same as A3A2R37	A-25
A3A2R63		RESISTOR, FIXED, COMPOSITION: 5,600 ohms, 1/4w; 01121 part no. CB5625; 30669 part no. 0235-4790	A-25
A3A2R64		Same as A1A1A2R68	A-25
A3A2R65		RESISTOR, FIXED, COMPOSITION: 22,000 ohms, 1w; 01121 part no. GB2235; 30669 part no. 0203-3800	A-25
A3A2R66		Same as A1A1A2R35	A-25
A3A2R67		Same as A1A1A2R68	A-25
A3A2R68		Same as A3A2R39	A-25
A3A2R69		Same as A1A1A2R68	A-25
A3A2R70		RESISTOR, FIXED, COMPOSITION: 820,000 ohms, 1/4w; 01121 part no. CB8245; 30669 part no. 0235-5310	A-25
A3A2R71		RESISTOR, FIXED, COMPOSITION: 1.5 megohm, 1/4w; 01121 part no. CB1555; 30669 part no. 0235-5370	-25
A3A2R72		Same as A1A1A1A1R9	A-25

TABLE A-10. TIME BASE DELAY OSCILLOSCOPE PLUG-IN UNIT TD-1086A/U(A3), MAIN SWEEP ASSEMBLY A3A2, PARTS LIST (CONT)

Reference Designation	Notes	Name and Description	Figure Number
A3A2R73		Not Used	A-25
A3A2R74		Not Used	A-25
A3A2R75		Same as A1A1A5R42	A-25
A3A2R76		Same as A1A2A6A1R7	A-25
A3A2R77		Same as A1A1A5R33	A-25
A3A2R78		Same as A3A2R9	A-25
A3A2R79		Same as A1A1A1R19	A-25
A3A2R80		Same as A1A1A2R35	A-25
A3A2R81		Same as A1A1A5R6	A-25
A3A2R82		Same as A1A1A2R35	A-25
A3A2R83		RESISTOR, FIXED, COMPOSITION: 27,000 ohms, 1/4w; 01121 part no. CB2705; 30669 part no. 0235-4950	A-25
A3A2R84		RESISTOR, FIXED, COMPOSITION: 430,000 ohms, 1/4w; 01121 part no. CB4345; 30669 part no. 0235-5240	A-25
A3A2R85		RESISTOR, FIXED, COMPOSITION: 470,000 ohms, 1/4w; 01121 part no. CB4745, 30669 part no. 0235-5250	A-25
A3A2R86		Same as A3A2R9	A-25
A3A2R87		Same as A3A2R39	A-25
A3A2R88		Same as A3A2R39	A-25
A3A2R89		Same as A3A2R85	A-25
A3A2R90		Same as A1A1A3R15	A-25
A3A2R91		Same as A3A2R9	A-25
A3A2R92		RESISTOR, FIXED, COMPOSITION: 620 ohms, 1/4w; 01121 part no. CB6215; 30669 part no. 0235-4570	A-25
A3A2R93		Same as A3A2R83	A-25
A3A2R94		Same as A3A2R83	A-25
A3A2T1		Same as A2A6T1	A-25
A3A2XQ1 to A3A2XQ18		Same as A1A1A1A1XQ1	A-25
A3A2XQ19		Not Used	A-25
A3A2XQ20 to A3A2XQ22		Same as A1A1A1A1XQ1	A-25
A3A2Z1		INDUCTOR ASSEMBLY: 30669 part no. 2101-9552	A-25

TABLE A-11. TIME BASE DELAY OSCILLOSCOPE PLUG-IN UNIT TD-1086A/U(A3), DELAYED SWEEP ASSEMBLY A3A5, PARTS LIST

Reference Designation	Notes	Name and Description	Figure Number
A3A5		DELAYED SWEEP ASSEMBLY: 30669 part no. 8901-7783 Attaching Parts: B(5); N(5)	A-26
A3A5CR1		Same as A1A1A2CR21	A-26
A3A5CR2		Same as A1A1A2CR21	A-26
A3A5CR3		Same as A1A1A3CR5	A-26
A3A5CR4 to A3A5CR7		Same as A1A1A1A1CR1	A-26
A3A5CR8		Same as A3A2CR11	A-26
A3A5CR9		Same as A1A1A1A1CR1	A-26
A3A5CR10		Same as A1A1A1A1CR1	A-26
A3A5CR11		Same as A3A2CR11	A-26
A3A5CR12 to A3A5CR17		Same as A1A1A1A1CR1	A-26
A3A5CR18		Same as A3A2CR11	A-26
A3A5CR19 to A3A5CR32		Same as A1A1A1A1CR1	A-26
A3A5C1		Same as A2A7A2C16	A-26
A3A5C2		Same as A3A2C6	A-26
A3A5C3		Same as A1A1A2C1	A-26
A3A5C4		Same as A1A1A2C1	A-26
A3A5C5		Same as A3A2C13	A-26
A3A5C6		Same as A2A3C15	A-26
A3A5C7		Same as A1A1A2C1	A-26
A3A5C8		Same as A1A1A2C3	A-26
A3A5C9		Same as A1A1A2C3	A-26
A3A5C10		Same as A3A1C7	A-26
A3A5C11		CAPACITOR, FIXED, ELECTROLYTIC: 90uf, 15vdc; 56289 part no. 30D906G015CCA; 30669 part no. 0328-1260	A-26
A3A5C12		Same as A1A1A2C1	A-26
A3A5C13		Same as A3A2C25	A-26
A3A4C14		Same as A3A2C13	A-26
A3A5C15		CAPACITOR, FIXED, FILM ELECTRIC: 22,000pf, 100 vdc; 56289 part no. 225P22391WD; 30669 part no. 0328-1390	A-26
A3A5C16 to A3A5C18		Same as A1A1A2C1	A-26
A3A5C19		Same as A3A2C25	A-26
A3A5C20		Same as A1A1A2C1	A-26
A3A5C21		Same as A1A1A2C1	A-26
A3A5C22		Same as A3A2C21	A-26
A3A5C23		Same as A3A2C18	A-26
A3A5C24		Same as A1A1A2C3	A-26
A3A5C25		Same as A1A1A2C3	A-26
A3A5C26		Same as A3A1C7	A-26
A3A5C27		CAPACITOR, FIXED, MICA DIELECTRIC: 22pf, +5%, 500vdc, 72136 part no. DM15-220J; 30669 part no. 0317-5110	A-26
A3A5C28		Same as A3A2C13	A-26
A3A5C29		Same as A3A2C19	A-26
A3A5C30		Same as A3A2C23	A-26

TABLE A-11. TIME BASE DELAY OSCILLOSCOPE PLUG-IN UNIT TD-1086A/U(A3), DELAYED SWEEP ASSEMBLY A3A5, PARTS LIST (CONT)

Reference Designation	Notes	Name and Description	Figure Number
A3A5C31		Same as A1A1A2C1	A-26
A3A5C32		Same as A3A2C1	A-26
A3A5C33		Same as A3A2C25	A-26
A3A5L1		Same as A1A1A2L1	A-26
A3A5L2		Same as A1A1A2L1	A-26
A3A5L3		Table 7-3; Item No. 1	A-26
A3A5L4		Table 7-3; Item No. 1	A-26
A3A5L5		Not Used	A-26
A3A5L6		Same as A1A1A2L1	A-26
A3A5L7		Same as A1A1A2L1	A-26
A3A5L8		Table 7-3; Item No. 11	A-26
A3A5MP1		BOARD, PRINTED CIRCUIT: 30669 part no. 4003-1415	A-26
A3A5MP2		RETAINER, CAPACITOR: 74970 part no. 115-189 30669 part no. 3601-1450	A-26
A3A5MP3		TERMINAL, FEEDTHRU: Teflon; 30669 part no. 5102-2730	A-26
A3A5MP4		Same as A3A5MP3	A-26
A3A5MP5		PIN, FORMED: 30669 part no. 5102-2760	A-26
A3A5MP6 to A3A5MP8		Same as A3A5MP5	A-26
A3A5MP9		SOCKET, LEAD: 30669 part no. 5102-2790	A-26
A3A5MP10		Same as A3A5MP9	A-26
A3A5MP11		TERMINAL, FORMED: 30669 part no. 5102-2800	A-26
A3A5MP12 to A3A5MP48		Same as A3A5MP11	A-26
A3A5MP49		TERMINAL, FORMED: 30669 part no. 5102-2880	A-26
A3A5MP50		Same as A3A5MP49	A-26
A3A5MP51 to A3A5MP74		Same as A1A1A2MP39	A-26
A3A5Q1		Same as A3A2Q1	A-26
A3A5Q2		Same as A1A1A1A1Q1	A-26
A3A5Q3		Same as A1A1A1A1Q5	A-26
A3A5Q4		Same as A3A2Q4	A-26
A3A5Q5		Same as A3A2Q4	A-26
A3A5Q6		Same as A3A2Q6	A-26
A3A5Q7		TRANSISTOR: NPN, Dual: 56289 part no. TD101; 30669 part no. 2601-0390	A-26 A-26
A3A5Q8		Same as A1A1A3Q1	A-26
A3A5Q9		Same as A1A1A1A1Q1	A-26
A3A5Q10		Same as A1A2A6A1Q4	A-26
A3A5Q11		Same as A1A2A6A1Q4	A-26
A3A5Q12		Same as A3A2Q14	A-26
A3A5Q13		Table 7-3; Item No. 50	A-26
A3A5Q14		Same as A3A2Q13	A-26
A3A5Q15		Same as A3A2Q10	A-26
A3A5Q16		Same as A3A2Q10	A-26
A3A5Q17		Same as A3A2Q1	A-26
A3A5Q18		Same as A1A1A3Q1	A-26
A3A5Q19		Same as A3A2Q11	A-26

TABLE A-11. TIME BASE DELAY OSCILLOSCOPE PLUG-IN UNIT TD-1086A/U(A3), DELAYED SWEEP ASSEMBLY A3A5, PARTS LIST (CONT)

Reference Designation	Notes	Name and Description	Figure Number
A3A5Q20		Same as A1A1A2Q14	A-26
A3A5R1		Same as A1A1R3	A-26
A3A5R2		Same as A2A7A2R19	A-26
A3A5R3		Same as A1A1A2R68	A-26
A3A5R4		Same as A1A1A3R14	A-26
A3A5R5		Same as A3A2R9	A-26
A3A5R6		RESISTOR, VARIABLE: 5,000 ohms, 1/2 w; 32997 part no.3345P1-501; 30669 part no. 0109-6330	A-26
A3A5R7		Same as A1A1A1A1R12	A-26
A3A5R8		Same as A1A1A5R33	A-26
A3A5R9		Same as A1A1A2R32	A-26
A3A5R10		Not Used	A-26
A3A5R11		Same as A1A1A1A1R21	A-26
A3A5R12		Same as A1A1A2R1	A-26
A3A5R13		Not Used	A-26
A3A5R14		Same as A3A2R32	A-26
A3A5R15		Same as A1A1A1A1R1	A-26
A3A5R16		Same as A1A1A2R68	A-26
A3A5R17		Same as A1A1A3R14	A-26
A3A5R18		Same as A1A1A2R68	A-26
A3A5R19		Same as A3A2R37	A-26
A3A5R20		Not Used	A-26
A3A5R21		Not Used	A-26
A3A5R22		Same as A1A1A1A1R19	A-26
A3A5R23		Table 7-3; Item No. 19	A-26
A3A5R24		Same as A3A5R6	A-26
A3A5R25		Same as A3A5R6	A-26
A3A5R26		Same as A1A1A1A1R19	A-26
A3A5R27		Same as A3A2R37	A-26
A3A5R28		Same as A1A1A2R68	A-26
A3A5R29		RESISTOR, FIXED, COMPOSITION: 7500 ohms, 1/2w; 01121 part no. EB7525; 30669 part no. 0203-0690	A-26
A3A5R30		Same as A1A1A2R35	A-26
A3A5R31		RESISTOR, FIXED, COMPOSITION: 33 ohms; 1/4w; 01121 part no. CB3305; 30669 part no. 0235-4260	A-26
A3A5R32		Same as A1A1A2R5	A-26
A3A5R33		Same as A2A6R13	A-26
A3A5R34		Same as A1A1A2R54	A-26
A3A5R35		Same as A1A1A2R68	A-26
A3A5R36		Same as A1A1A2R44	A-26
A3A5R37		Same as A1A2A61R7	A-26
A3A5R38		Same as A1A2A6A1R9	A-26
A3A5R39		Same as A1A1A5R6	A-26
A3A5R40		Same as A1A1A2R35	A-26
A3A5R41		Same as A1A1A2R35	A-26
A3A5R42		Same as A1A1A5R33	A-26
A3A5R43		Same as A1A2A6A1R7	A-26
A3A5R44		Same as A1A1A5R42	A-26
A3A5R45		Same as A3A2R9	A-26
A3A5R46		Same as A1A1R3	A-26
A3A5R47		Same as A1A1A1A1R19	A-26
A3A5R48		Same as A1A2A6A1R9	A-26

TABLE A-11. TIME BASE DELAY OSCILLOSCOPE PLUG-IN UNIT TD-1086A/U(A3), DELAYED SWEEP ASSEMBLY A3A5, PARTS LIST (CONT)

Reference Designation	Notes	Name and Description	Figure Number
A3A5R49		Not Used	A-26
A3A5R50		Same as A1A1A2R3	A-26
A3A5R51		Same as A1A1A2R32	A-26
A3A5R52		Same as A1A1A2R35	A-26
A3A5R53		Same as A1A1A3R14	A-26
A3A5R54		Same as A3A2R55	A-26
A3A5R55		Same as A1A1A5R6	A-26
A3A5R56		Not Used	A-26
A3A5R57		Same as A3A2R50	A-26
A3A5R58		Same as A1A1A1A1R24	A-26
A3A5R59		Same as A3A2R50	A-26
A3A5R60		Same as A3A2R51	A-26
A3A5R61		Same as A1A1A2R44	A-26
A3A5R62		Same as A1A1A2R23	A-26
A3A5R63		Same as A1A1A5R6	A-26
A3A5R64		Same as A3A2R46	A-26
A3A5R65		Same as A1A1A1A1R24	A-26
A3A5R66		Same as A1A1A2R68	A-26
A3A5R67		Same as A1A1A2R35	A-26
A3A5R68		Same as A1A1A2R68	A-26
A3A5R69		Same as A3A2R65	A-26
A3A5R70		Same as A1A1A2R44	A-26
A3A5R71		Same as A1A1A2R68	A-26
A3A5R72		Same as A1A1A3R14	A-26
A3A5R73		Same as A2A6R43	A-26
A3A5R74		Same as A3A2R61	A-26
A3A5R75		Same as A3A2R37	A-26
A3A5R76		Same as A3A2R3	A-26
A3A5R77		Same as A3A2R63	A-26
A3A5R78		Same as A1A1A2R68	A-26
A3A5R79		Same as A1A1A2R5	A-26
A3A5R80, A3A5R81		Same as A1A1A2R5	A-26
		RESISTOR, FIXED, COMPOSITION: 13,000 ohms, 1w; 01121 part no. GB1335; 30669 part no. 0203-3750	A-26
A3A5R82		RESISTOR, VARIABLE: 5,000 ohms; 32997 part no. 3329H1-502; 30669 part no. 0109-6450	A-26
A3A5R83		Same as A1A1A5R6	A-26
A3A5R84		Same as A3A2R39	A-26
A3A5R85		Same as A2A6R40	A-26
A3A5R86		Not Used	
A3A5R87		Same as A3A2R83	A-26
A3A5R88		Same as A3A2R83	A-26
A3A5R89		Same as A3A2R83	A-26
A3A5T1		Same as A2A6T1	A-26
A3A5XQ1 to A3A5XQ6		Same as A1A1A1A1XQ1	A-26

TABLE A-11. TIME BASE DELAY OSCILLOSCOPE PLUG-IN UNIT TD-1086A/U(A3), DELAYED SWEEP ASSEMBLY A3A5, PARTS LIST (CONT)

Reference Designation	Notes	Name and Description	Figure Number
A3A5XQ7A		Same as A1A1A1A1XQ1	A-26
A3A5XQ7B		Same as A1A1A1A1XQ1	A-26
A3A5XQ8 to A3A5XQ16		Same as A1A1A1A1XQ1	
A3A5XQ17		Not Used	
A3A5XQ18 to A3A5XQ20		Same as A1A1A1A1XQ1	

TABLE A-12. TIME BASE DELAY OSCILLOSCOPE PLUG-IN UNIT TD-1086A/U(A3), TIME BASE FUNCTION ASSEMBLY A3A6, PARTS LIST

Reference Designation	Notes	Name and Description	Figure Number
A3A6		TIME BASE FUNCTION ASSEMBLY: 30669 part no. 8901-7890	A-27
A3A6C1		CAPACITOR, FIXED, FILM DIELECTRIC: 1 uf; 72928 part no. 398-033-0-5; 30669 part no. 0328-0850	A-27
A3A6C2 to A3A6C4		Same as A3A6C1	A-27
A3A6DS1		LAMP; Part of A3A6S2	A-27
A3A6J1		Same as A1A1A1J1	A-27
A3A6J2		Same as A1A1A1J1	A-27
A3A6J3		CONNECTOR, RECEPTACLE, ELECTRICAL: 24 pin, male contacts; 00779 part no. 26-159-24; 30669 part no. 0906-0230; (Attaching Parts)D(2); NUT, HEXAGON, SELFLOCKING No. 4-40 30669 part no. 6102-8530 (2)	A-27
A3A6J4		Same as A2A5J4	A-27
A3A6MP1		TERMINAL, LUG; 30669 part no. 5100-2310 (Attaching Parts) C (1)	A-27
A3A6MP2		TERMINAL, STANDOFF: Threaded No. 4; 30669 part no. 5102-2850	A-27
A3A6MP3		Same as A3A6MP2	A-27
A3A6MP4		TERMINAL, LUG: 30669 part no. 5101-3720	A-27
A3A6MP5		Same as A3A6MP4	A-27
A3A6MP6		FASTENER, SNAP SLIDE: 6401-8220	A-27
A3A6MP7		Same as A3A6MP6	A-27
A3A6MP8		TERMINAL, STUD: 30669 part no. 4101-1400	A-27
A3A6MP9 to A3A6MP11		Same as A3A6MP8	A-27
A3A6MP12		TERMINAL, LUG: Ground; 30669 part no. 5100-9010	A-27
A3A6MP13		BRACKET, CONNECTOR: 30669 part no. 3506-2593; (Attaching Parts) D(4); M(4)	A-27
A3A6MP14		SUPPORT, VERTICAL; Right side; 30669 part no. 3103–5658	A-27
A3A6MP15		PANEL, FRONT; Function; 30669 part no. 3201-7671	A-27
A3A6R1A,B,C		RESISTOR, VARIABLE: 30669 part no. 0107-3472; (Attaching Parts) NUT, HEXAGON: no. 1/4-32 NEF 2A; 30669 part no. 6103-4510 (1); P(1)	A-27
A3A6R2		Same as A1A1A6R4	A-27
A3A6S1		SWITCH, TOGGLE: spdt; 95146 part no. MST105E; 30669 part no. 0503-2730	A-27
A3A6S2		SWITCH, PUSH: spst, contains lamp DSI; 07137 part no. MBLA42-000A2BT; 30669 part no. 0503-2800	A-27
A3A6S3		SWITCH, ROTARY: Horizontal Mode; 30669 part no. 0501-8633	A-27
A3A6A1		SWITCH ASSEMBLY, TRIGGER: 30669 part no. 8901-7615 Attaching Parts: SPACER, THREADED: No. 4; 30669 part no. 4301-4421 (4); WASHER, LOCK: Split, No. 4; 30669 part no. 6210-0010	A-28
A3A6A1C1		CAPACITOR, FIXED, COMPOSITION: 5.6pf, ±5%; 84171 part no. JM5-32POR M5PCT; 30669 part no. 0313-3680	A-28
A3A6A1C2		CAPACITOR, FIXED, COMPOSITION: 10 pf, ±10%; 29604 part no. GA10PFPOR M10PCT; 30669 part no. 0313-3960	A-28

TABLE A-12. TIME BASE DELAY OSCILLOSCOPE PLUG-IN UNIT TD-1086A/U(A3), TIME BASE FUNCTION ASSEMBLY A3A6, PARTS LIST (CONT)

Reference Designation	Notes	Name and Description	Figure Number
A3A6A1C3		CAPACITOR, FIXED, MICA DIELECTRIC: 37pf, ±5%, 500 vdc; 72136 part no. DM15-370J; 30669 part no. 0317-5160	A-28
A3A6A1C4		Same as A3A2C25	A-28
A3A6A1C5		CAPACITOR, FIXED, FILM: 2,700 pf, ±10%, 84048 part no. 663XF272; 30669 part no. 0328-3160	A-28
A3A6A1MP1		TERMINAL, LUG: 30669 part no. 5101-9010	A-28
A3A6A1MP2		Same as A3A6A1MP1	A-28
A3A6A1MP3		Same as A3A6A1MP1	A-28
A3A6A1R1		Same as A1A1A2R5	A-28
A3A6A1R2		Same as A3A2R39	A-28
A3A6A1R3		RESISTOR, FIXED, FILM: 110,000 ohms, 1/8w; 91637 part no. RN55D1103K; 30669 part no. 0241-3880	A-28
A3A6A1R4		RESISTOR, FIXED, FILM: 900,000 ohms; 1/4w; 91637 part no. RN60D9003F; 30669 part no. 0243-5800	A-28
A3A6A1S1A		SWITCH, LEVER: 3 SECTION: 30669 part no. 0502-8001	A-28
A3A6A1S1B		Part of A3A6A1S1A	A-28
A3A6A1S1C		Part of A3A6A1S1A	A-28
A3A6A2		Same as A3A6A1	A-28
A3A6A2C1		Same as A3A6A1C1	A-28
A3A6A2C2		Same as A3A6A1C2	A-28
A3A6A2C3		Same as A3A6A1C3	A-28
A3A6A2C4		Same as A3A2C25	A-28
A3A6A2C5		Same as A3A6A1C5	A-28
A3A6A1MP1		TERMINAL, LUG: 30669 part no. 5101-9010	A-28
A3A6A2MP2		Same as A3A6A2MP1	A-28
A3A6A2MP3		Same as A3A6A2MP1	A-28
A3A6A2R1		Same as A1A1A2R5	A-28
A3A6A2R2		Same as A3A2R39	A-28
A3A6A2R3		Same as A3A6A1R3	A-28
A3A6A2R4		Same as A3A6A1R4	A-28
A3A6A2S1A		Same as A3A6A1S1A	A-28
A3A6A2S1B		Part of A3A6A2S1A	A-28
A3A6A2S1C		Part of A3A6A2S1A	A-28

TABLE A-13. FRONT COVER ASSEMBLY A4, PARTS LIST

Reference Designation	Notes	Name and Description	Figure Number
A4		COVER ASSEMBLY, FRONT: Consists of accessories MP1 through MP28: 30669 part no. 8700-2551	A-29
A4MP1		PROBE: 30669 part no. 8901-7902	A-29
A4MP2		Same as A4MP1	A-29
A4MP3		ADAPTER, CONNECTOR: MIL Type UG-255/U part no. 0906-0320	A-29
A4MP4		Same as A4MP3	A-29
A4MP5		ADAPTER, CONNECTOR: MIL Type UG-273/U part no. 0906-0310	A-29
A4MP6		Same as A4MP5	A-29
A4MP7		ADAPTER, CONNECTOR: MIL Type UG-274/U part no. 0906-0330	A-29
A4MP8		Same as A4MP7	A-29
A4MP9		CABLE ASSEMBLY: 30669 part no. 5028-9669	A-29
A4MP10		Same as A4MP9	A-29
A4MP11		POST, BINDING: MIL Type UG-1035/U part no. 0906-0300	A-29
A4MP12		Same as A4MP11	A-29
A4MP13		PLUG, TIP BANANA: 78947 part no. 152239; 30669 part no. 0905-9850	A-29 A-29
A4MP14		Same as A4MP13	A-29
A4MP15		SPRING, JACK: 30669 part no. 3005-7412	A-29
A4MP16		Same as A4MP15	A-29
A4MP17		Table 7-3; Item No. 41	A-29
A4MP18 to A4MP22		Same as A4MP17	A-29
A4MP23		CLIP, ALLIGATOR: 30669 part no. 3600-6621	A-29
A4MP24		Same as A4MP23	A-29
A4MP25		HOOK, TIP: part of A4MP1; 30669 part no 3005-9036	A-29
A4MP26		Same as A4MP25	A-29
A4MP27		PINCHER, TIP: part of A4MP1; 30669 part no. 3005-9038	A-29
A4MP28		Same as A4MP27	A-29
A4MP29		PIN, TIP: part of A4MP1; 30669 part no. 3005-9039	A-29
A4MP30		Same as A4MP29	A-29
A4MP31		GROUND CABLE ASSEMBLY: part of A4MP1; 30669 part no. 5028-9782	A-29
A4MP32		Same as A4MP31	A-29
A4MP33		STANDOFF: 30669 part no. 3005-2400	A-29
A4MP34		Not Used	
A4MP35		RELEASE, SQUEEZE: 30669 part no. 3802-3470	A-29
A4MP36		DOOR, COVER: 30669 part no. 3507-7729 (Attaching Parts) E (2)	A-29
A4MP37		DOOR, BACKING: 30669 part no. 6803-2506	A-29
A4MP38		BRACKET, COVER: 30669 part no. 3507-7728 (Attaching Parts) RIVET: 30669 part no. 6303-1050 (2); RIVET 30669 part no. 30669 part no. 6303-1120 (2)	A-29
A4MP39		Same as A1A3MP14	A-29
A4MP40 to A4MP42		Same as A4MP39	A-29

TABLE A-13. FRONT COVER ASSEMBLY A4, PARTS LIST (CONT)

Reference Designation	Notes	Name and Description	Figure Number
A4MP43		EXTRUSION, RUBBER: 30669 part no. 7000-3631	A-29
A4MP44		Same as A4MP29	A-29
A4MP45		INSERT, COVER: Top. 30669 part no. 6803-2504	A-29
A4MP46		INSERT, COVER: Bottom: 30669 part no. 6803-2505	A-29
A4MP47		LINER, FRONT COVER: 30669 part no. 6803-2507	A-29
A4MP48		COVER, FRONT: 30669 part no. 4202-6561	A-29

TABLE A-14. LIST OF COMMON ITEM DESCRIPTIONS

ITEM NO.	DESCRIPTION
1	BEAD FERRITE: 02114 part no. 56-59065-3B; 30669 part no. 2110-1560
2	CAPACITOR, FIXED, CERAMIC DIELECTRIC: 20,000 pf, 150 vdc; 71590 part no. DDM203; 30669 part no. 0319-1050
3	CAPACITOR, FIXED, CERAMIC DIELECTRIC: 1,000 pf; 18796 part no. 861-000Z5U0102M; 30669 part no. 0328-1410
4	CAPACITOR, FIXED, ELECTROLYTIC: 3 uf, 150 vdc; 56289 part no. 30D305G150CG2; 30669 part no. 0328-0770
5	CAPACITOR, FIXED, ELECTROLYTIC: 8 uf, 25 vdc; 56289 part no. 30D805G025BA4; 30669 part no. 0238-0640
6	CAPACITOR, FIXED, MICA DIELECTRIC: 39 pf, ±5%, 500 vdc; 72136 part no. DM15-390J; 30669 part no. 0317-5170
7	CAPACITOR, VARIABLE, CERAMIC DIELECTRIC: 2-1.5 pf; 18796 part no. 530-000-2-1-5PF; 30669 part no. 0327-3920
8	CAPACITOR, VARIABLE: 0.7-3 pf; 30669 part no. 0319-1254
9	COIL, RADIO REQUENCY: 100 uf; 82412 part no. 1315-12; 30669 part no. 2110-2520
10	COIL, RADIO FREQUENCY: 47 uf; 82412 part no. 1315-4; 30669 part no. 2110-2510
11	COIL, RADIO FREQUENCY: 4.7 uh; 82412 part no. 4425-14; 30669 part no. 2110-2500
12	CONNECTOR, RECEPTACLE, ELECTRICAL: BNC type; 81349 part no. UG1094U; 30669 part no. 0906-0120
13	KNOB: LEVER SWITCH: 76854 part no. 29720-001; 30669 part no. 4501-0880
14	RESISTOR, FIXED, COMPOSITION: 10 ohms, 1/4 w; 01121 part no. CB1005; 30669 part no. 0235-4140
15	RESISTOR, FIXED, COMPOSITION: 100 ohms, 1/4 w; 01121 part no. CB1015; 30669 part no. 0235-4380
16	RESISTOR, FIXED, COMPOSITION: 1,000 ohms, 1/4 w; 01121 part no. CB1025; 30669 part no. 0235-4620
17	RESISTOR, FIXED, COMPOSITION: 10,000 ohms, 1/4 w; 01121 part no. CB1035; 30669 part no. 0235-4850
18	RESISTOR, FIXED, COMPOSITION: 100,000 ohms, 1/4 w; 01121 part no. CB1045; 30669 part no. 0235-5090
19	RESISTOR, FIXED, COMPOSITION: 1,100 ohms, 1/4 w; 01121 part no. CB1125; 30669 part no. 0235-4630
20	RESISTOR, FIXED, COMPOSITION: 1,200 ohms, 1/4 w; 01121 part no. CB1225; 30669 part no. 0235-4640
21	RESISTOR, FIXED, COMPOSITION: 1,500 ohms, 1/4 w; 01121 part no. CB1525; 30669 part no. 0235-4650
22	RESISTOR, FIXED, COMPOSITION: 15,000 ohms, 1/4 w; 01121 part no. CB1535; 30669 part no. 0235-4890
23	RESISTOR, FIXED, COMPOSITION: 1,800 ohms, 1/4 w; 01121 part no. CB1825; 30669 part no. 0235-4670
24	RESISTOR, FIXED, COMPOSITION: 2,000 ohms, 1/4 w; 01121 part no. CB2025; 30669 part no. 0235-4680
25	RESISTOR, FIXED, COMPOSITION: 220 ohms, 1/4 w; 01121 part no. CB2215; 30669 part no. 0235-4460
26	RESISTOR, FIXED, COMPOSITION: 2,400 ohms, 1/4 w; 01121 part no. CB2425; 30669 part no. 0235-4700
27	RESISTOR, FIXED, COMPOSITION: 2,700 ohms, 1/4 w; 01121 part no. CB2725; 30669 part no. 0235-4710

TABLE A-14. LIST OF COMMON ITEM DESCRIPTIONS (CONT)

ITEM NO.	DESCRIPTION
28	RESISTOR, FIXED, COMPOSITION: 3,000 ohms, 1/4 w; 01121 part no. CB3025; 30669 part no. 0235-4720
29	RESISTOR, FIXED, COMPOSITION: 3,300 ohms, 1/4 w; 01121 part no. CB3325; 30669 part no. 0235-4730
30	RESISTOR, FIXED, COMPISITION: 47 ohms, 1/4 w; 01121 part no. CB4705; 30669 part no. 0235-4300
31	RESISTOR, FIXED, COMPOSITION: 470 ohms, 1/4 w; 01121 part no. CB4715; 30669 part no. 0235-4540
32	RESISTOR, FIXED, COMPOSITION: 4,700 ohms, 1/4 w; 01121 part no. CB4725; 30669 part no. 0235-4770
33	RESISTOR, FIXED, COMPOSITION: 47,000 ohms, 1/4 w; 01121 part no. CB4735; 30669 part no. 0235-5010
34	RESISTOR, FIXED, COMPOSITION: 51 ohms, 1/4 w; 01121 part no. CB5105; 30669 part no. 0235-4310
35	RESISTOR,FIXED,COMPOSITION: 680 ohms, 1/4 w;01121 part no. CB6815; 30669 part no. 0235-4580
36	RESISTOR, FIXED, COMPOSITION: 6,800 ohms, 1/4 w; 01121 part no. CB6825; 30669 part no. 0235-4810
37	RESISTOR, FIXED, COMPOSITION: 750 ohms, 1/4 w; 01121 part no. CB7515; 30669 part no. 0235-4590
38	RESISTOR, FIXED, FILM: 100 ohms, ±1%, 1/8 w; 91637 part no. MFF1-8-1000T1; 30669 part no. 0238-8770
39	RESISTOR, FIXED, FILM: 261 ohms, ±1%, 1/8 w; 01637 part no. MFF1-8-2610T1; 30669 part no. 0238-9210
40	RESISTOR, FIXED, FILM: 909 ohms, ±1%, 1/8 w; 91637 part no. MFF1-8-9090T1; 30669 part no. 0238-9440
41	SCREW, TIP: 30669 part no. 3005-9058
42	SEMICONDUCTOR DEVICE, DIODE: 07263 part no. FD300; 30669 part no. 2601-2320
43	SEMICONDUCTOR DEVICE, DIODE: 07263 part no. FD600; 30669 part no. 2600-6930
44	SEMICONDUCTOR DEVICE, DIODE: 400 piv; 11961 part no. S1400; 30669 part no. 2601-0570
45	SEMICONDUCTOR DEVICE, DIODE: Zener; 01295 part no. 1N752A; 30669 part no. 2600-9360
46	SEMICONDUCTOR DEVICE, DIODE: Matched pair; 30669 part no. 2600-3181
47	SOCKET, TRANSISTOR: 71785 part no. 133-23-92-041; 30669 part no. 3401-1020
48	TRANSISTOR: NPN; 07263 part no. 2N3563; 30669 part no. 2631-3490
49	TRANSISTOR: NPN; 07263 part no. 2N3565; 30669 part no. 2600-9860
50	TRANSISTOR: PNP; 07263 part no. 2N3640; 30669 part no. 2600-9810
51	TRANSISTOR: NPN; 07263 part no. 2N3646; 30669 part no. 2600-9880
52	TRANSISTOR: NPN; 07263 part no. 2N3964; 30669 part no. 2601-0420
53	TRANSISTOR: PNP; 07263 part no. 2N4916; 30669 part no. 2601-0160

TABLE A-15. LIST OF ATTACHING HARDWARE

ITEM NO.	DESCRIPTION
A.	LUG, SOLDER, STEEL CADMIUM PLATED, no. 4, 30669 part no. 5101-3720
B.	MACHINE SCREW, BH, STAINLESS STEEL, 32 x 1/4, no. 6, 30669 part no. 6009-6150
C.	MACHINE SCREW, BH, STAINLESS STEEL, 40 x 1/2, no. 4, 30669 part no. 6009-6080
D.	MACHINE SCREW, BH, STAINLESS STEEL, 4-40 x 5/16, no. 4, 30669 part no. 6009-6090
E.	MACHINE SCREW, BH, STAINLESS STEEL, 32 x 5/16, no. 6, 30669 part no. 6009-6160
F.	MACHINE SCREW, BH, STAINLESS STEEL, 32 x 5/8, no. 10, 30669 part no. 6009-6430
G.	MACHINE SCREW, FLAT HEAD, STAINLESS STEEL‘ 32 x 1/4, no. 6, 30669 part no. 6009-6660
H.	NUT, HEX, STEEL CADMIUM PLATED, no. 3/8-32 x 3/32 in. thk, 1/2 A.F. 30669 part no. 6101-3860
I.	NUT, HEX, STEEL CADMIUM PLATED, 32 x 1/4, no. 6, 30669 part no. 6100-0600
J.	NUT, HEX, STEEL CADMIUM PLATED, 32 x 3/8 x 1/8, no. 10, 30669 part no. 6100-1630
K.	NUT/LOCKWASHER, STEEL CADMIUM PLATED, no. 6-32, 30669 part no. 6103-2730
L.	NUT, SPRING, STEEL CADMIUM PLATED, no. 6-32, 30669 part no. 6103-9060
M.	WASHER, SPLIT, STEEL CADMIUM PLATED, no. 4, 30669 part no. 6210-0010
N.	WASHER, INTERNAL, STEEL CADMIUM PLATED, no. 6, 30669 part no. 6220-0030
O.	LOCKWASHER, TYPE “A”, STEEL CADMIUM PLATED, no. 3/8, 30669 part no. 6220-0100
P.	LOCKWASHER, TYPE “A”, STEEL CADMIUM PLATED, no. 1/4, 30669 part no. 6220-1810

TABLE A-16. LIST OF MANUFACTURER'S CODES

H4-1 CODES	MANUFACTURER AND ADDRESS
00779	AMP Inc., Harrisburg, Pa.
01121	Allen Bradley Co., Milwaukee, Wis.
01295	Texas Instruments Inc., Semiconductor Components Div., Dallas, Texas
02114	Ferrozcube Corp., Saugerties, N.Y.
03508	General Electric Co., Semiconductor Products Dept., Syracuse, N.Y.
03888	Pyrofilm Resistor Co. Inc., Whippany, N.J.
04713	Motorola Semiconductor Products Inc., Phoenix, Arizona
04850	Permag Corp., Jamaica, N.Y.
05010	Gulton Industries Inc., Instrumentation Products Division, Metuchen, N.J.
05820	Wakefield Engineering, Wakefield, Mass.
07137	Tec Inc., South Eden Prairie, Minn.
07263	Fairchild Semiconductor, a Div. of Fairchild Camera and Instrument Corp., Mountain View, Calif.
12697	Clarostat Mfg. Co. Inc., St. Cover, N.H.
17896	Siliconix Inc., Santa Clara, Calif.
18714	RCA Corp. Solid State Division, Findlay, Ohio
18796	Erie Technological Products Inc., State College, Pa.
22753	UID Electronics Corp., Hollywood, Fla.
24546	Corning Glass Works, Bradford, Pa.
28959	Hoffman Electronics Corp., El Monte, Calif.
29604	Stackpole Components Co., Raleigh, N.C.
30669	Dumont Oscilloscope Laboratories Inc., West Caldwell, N.J.
32767	Griffith Plastics Products Co., Burlingame, Calif.
32997	Bourns Inc., Trimpot Products Division, Riverside, Calif.
34114	See 76854
56289	Sprague Electric Co., North Adams, Mass.
71400	Bussman Mfg. Division of McGraw-Edison Co., St. Louis, Mo.
71590	Globe Union Inc., Centralab Div., Milwaukee, Wis.
71785	Cinch Mfg. Co., Howard B. Jones Div., Chicago, Ill.
72136	Electro Motive Mfg. Co. Inc., Willimantic, Conn.
72928	Gudeman Div. of Gulton Industries Inc., Chicago, Ill.
73445	Amperex Electronic Corp., Hicksville, Long Island, N.Y.
74970	Johnson EF Co., S.W. Waseca, Minn.
75915	Littlefuse Inc., Des Plaines, Ill.
76854	Oak Mfg. Co., Div. Oak Electro/Netics Corp., Crystal Lakes, Ill.
80031	Mepco Inc. Div. of Sessions Clock Co., Morristown, N.J.
81073	Grayhill Inc., La Grange, Ill.
82412	Airco Speer Electronics Components, Du Bois, Pa.
82389	Switchcraft Inc., Chicago, Ill.
82893	Vector Engineering,Sylmar, Ca.
84048	IRC Division of TRW Inc., St. Petersburg Plant, St. Petersburg, Florida
84171	Arco Electronics Inc., Great Neck, N.Y.
84411	TRW Capacitor Division, St. Ogallala, Nebr.
89737	King Electronics and Mfg. Co., Cleveland, Ohio
90201	Mallory Capacitor Co., Indianapolis, Ind.
91418	Radio Materials Co., Chicago, Ill.
91506	Augat Inc., Attleboro, Mass.
91637	Dale Electronics Inc., Columbus, Nabr.
91934	Miller Electric Co., Div. of Avnet Corp., Woonsocket, R.I.
94222	Southco, Lester, Pa.
95146	Alco Electronics Products Inc., Lawrence, Mass.
96924	Grigsby Inc., Washington, D.C.
98291	Scalectro Corp., Mamaroneck, N.Y.

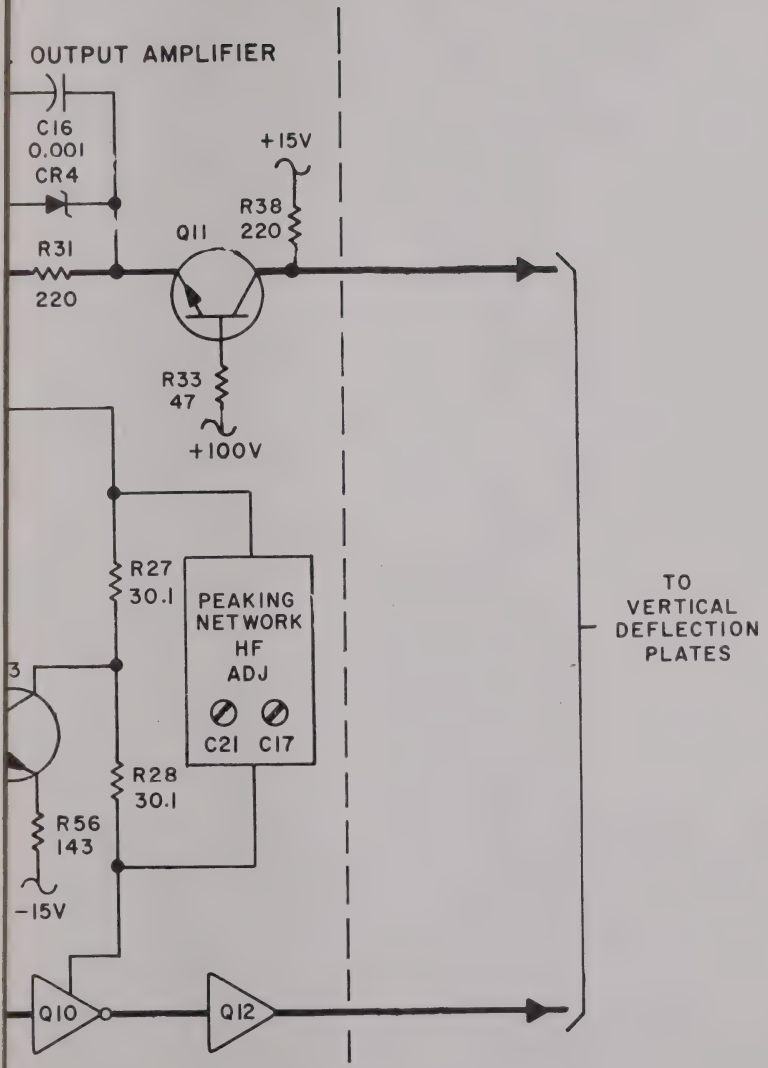

Figure A-1. Vertical Output Amplifier, Simplified Diagram

TABLE A-16. LIST OF MANUFACTURER'S CODES

H4-1 CODES	MANUFACTURER AND ADDRESS
00779	AMP Inc., Harrisburg, Pa.
01121	Allen Bradley Co., Milwaukee, Wis.
01295	Texas Instruments Inc., Semiconductor Components Div., Dallas, Texas
02114	Ferrozcube Corp., Saugerties, N.Y.
03508	General Electric Co., Semiconductor Products Dept., Syracuse, N.Y.
03888	Pyrofilm Resistor Co. Inc., Whippany, N.J.
04713	Motorola Semiconductor Products Inc., Phoenix, Arizona
04850	Permag Corp., Jamaica, N.Y.
05010	Gulton Industries Inc., Instrumentation Products Division, Metuchen, N.J.
05820	Wakefield Engineering, Wakefield, Mass.
07137	Tec Inc., South Eden Prairie, Minn.
07263	Fairchild Semiconductor, a Div. of Fairchild Camera and Instrument Corp., Mountain View, Calif.
12697	Clarostat Mfg. Co. Inc., St. Cover, N.H.
17896	Siliconix Inc., Santa Clara, Calif.
18714	RCA Corp. Solid State Division, Findlay, Ohio
18796	Erie Technological Products Inc., State College, Pa.
22753	UID Electronics Corp., Hollywood, Fla.
24546	Corning Glass Works, Bradford, Pa.
28959	Hoffman Electronics Corp., El Monte, Calif.
29604	Stackpole Components Co., Raleigh, N.C.
30669	Dumont Oscilloscope Laboratories Inc., West Caldwell, N.J.
32767	Griffith Plastics Products Co., Burlingame, Calif.
32997	Bourns Inc., Trimpot Products Division, Riverside, Calif.
34114	See 76854
56289	Sprague Electric Co., North Adams, Mass.
71400	Bussman Mfg. Division of McGraw-Edison Co., St. Louis, Mo.
71590	Globe Union Inc., Centralab Div., Milwaukee, Wis.
71785	Cinch Mfg. Co., Howard B. Jones Div., Chicago, Ill.
72136	Electro Motive Mfg. Co. Inc., Willimantic, Conn.
72928	Gudeman Div. of Gulton Industries Inc., Chicago, Ill.
73445	Amperex Electronic Corp., Hicksville, Long Island, N.Y.
74970	Johnson EF Co., S.W. Waseca, Minn.
75915	Littlefuse Inc., Des Plaines, Ill.
76854	Oak Mfg. Co., Div. Oak Electro/Netics Corp., Crystal Lakes, Ill.
80031	Mepco Inc. Div. of Sessions Clock Co., Morristown, N.J.
81073	Grayhill Inc., La Grange, Ill.
82412	Airco Speer Electronics Components, Du Bois, Pa.
82389	Switchcraft Inc., Chicago, Ill.
82893	Vector Engineering,Sylmar, Ca.
84048	IRC Division of TRW Inc., St. Petersburg Plant, St. Petersburg, Florida
84171	Arco Electronics Inc., Great Neck, N.Y.
84411	TRW Capacitor Division, St. Ogallala, Nebr.
89737	King Electronics and Mfg. Co., Cleveland, Ohio
90201	Mallory Capacitor Co., Indianapolis, Ind.
91418	Radio Materials Co., Chicago, Ill.
91506	Augat Inc., Attleboro, Mass.
91637	Dale Electronics Inc., Columbus, Nabr.
91934	Miller Electric Co., Div. of Avnet Corp., Woonsocket, R.I.
94222	Southco, Lester, Pa.
95146	Alco Electronics Products Inc., Lawrence, Mass.
96924	Grigsby Inc., Washington, D.C.
98291	Sealectro Corp., Mamaroneck, N.Y.

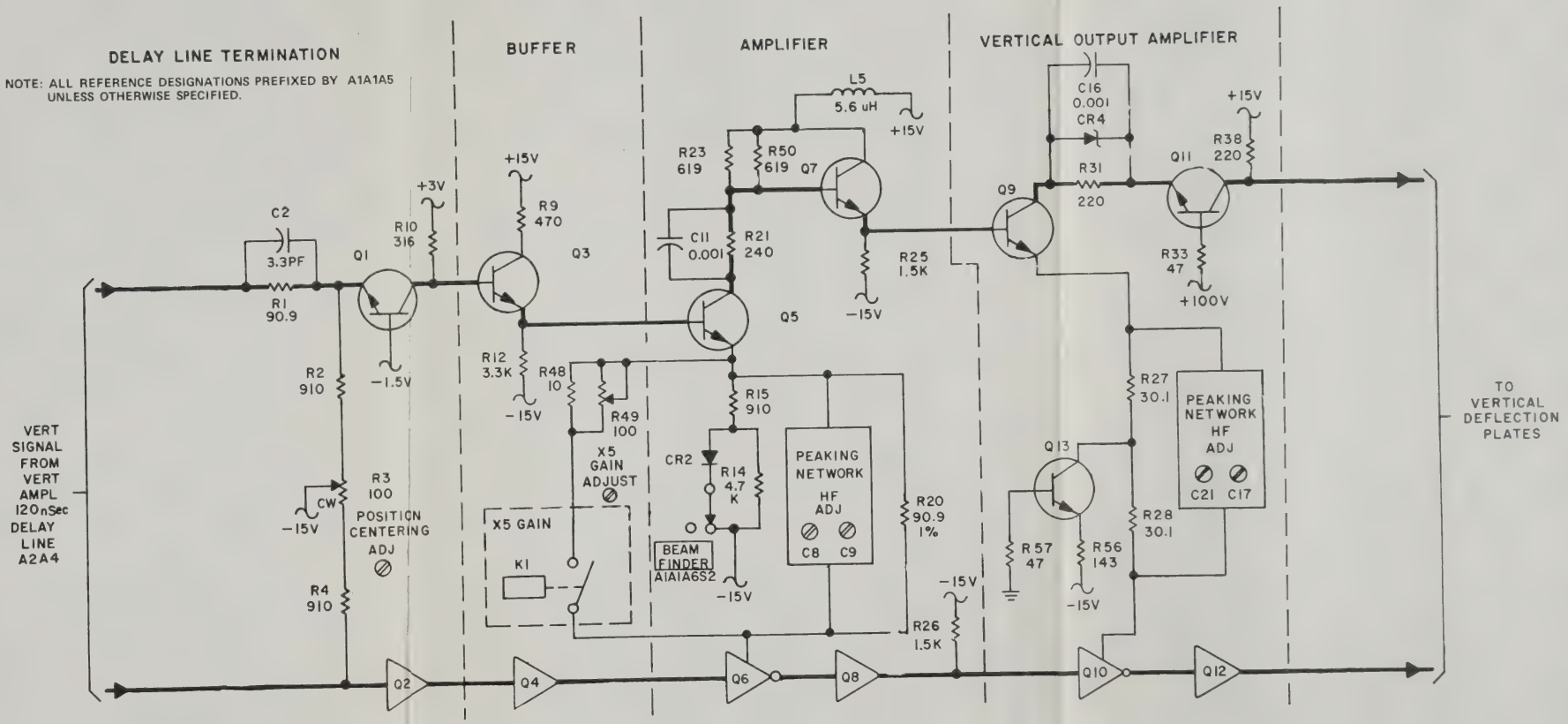

FOR USE ON AN/USM-281E ONLY. REFER TO CHAPTER 3 FOR AN/USM-281D CONFIGURATION.

Figure A-1. Vertical Output Amplifier, Simplified Diagram

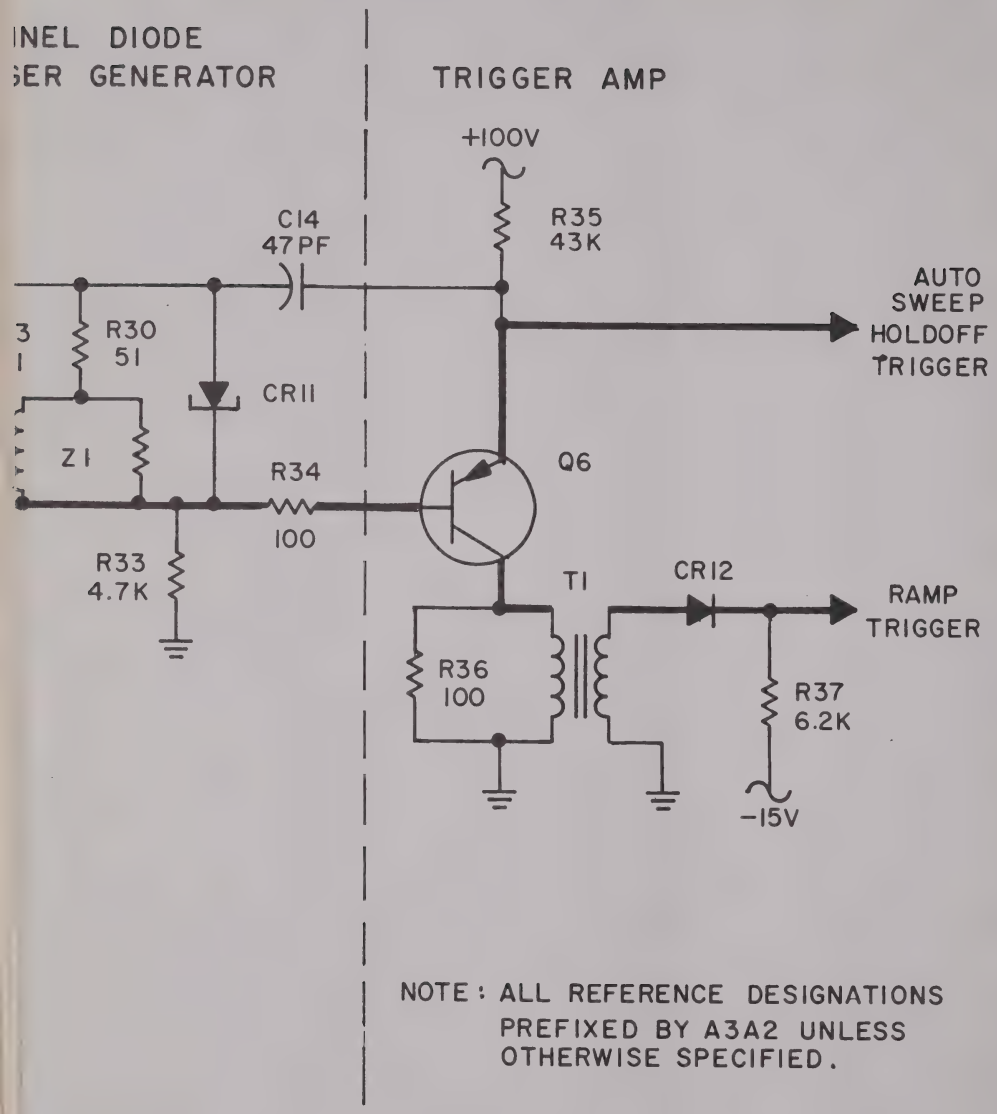

Figure A-2. Comparator and Pulse Generator, Simplified Diagram

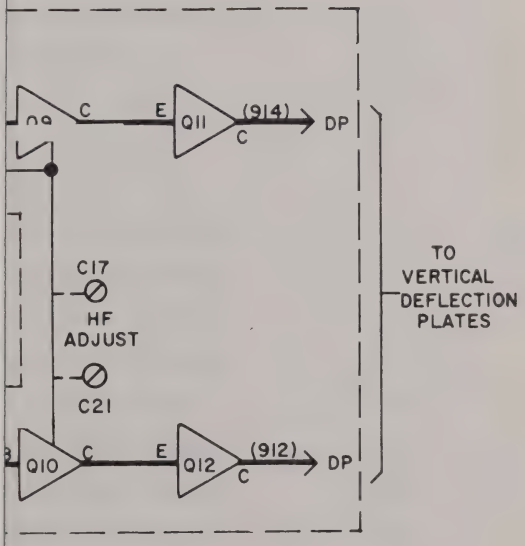

Figure A-3. Vertical Output Amplifier, Functional Signal Flow Diagram

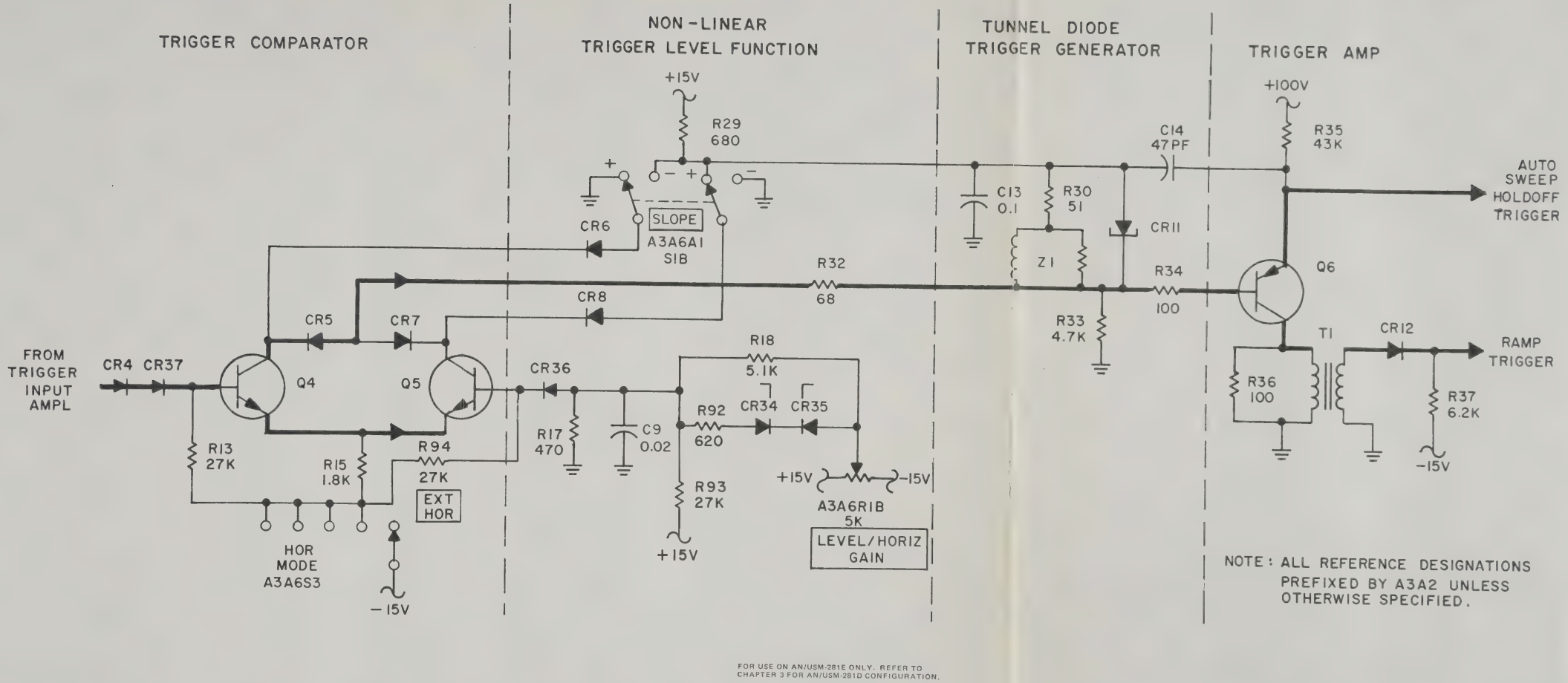

FOR USE ON AN/USM-281E ONLY. REFER TO CHAPTER 3 FOR AN/USM-281D CONFIGURATION.

Figure A-2. Comparator and Pulse Generator, Simplified Diagram

TEST DATA

GENERAL NOTES

A. Oscilloscope AN/USM-281 required.

B. Voltages measured with no signal, VERTICAL MODE/TRIG MODE (36) set to ADD, POSITION (25) (37) controls centered.

C. Unless otherwise indicated, waveform tolerances are ±10%.

D. If necessary refer to paragraph 5-23 for troubleshooting sequences, and figure 5-21 for test point location.

SPECIFIC NOTES

1. Make the following control settings:

CONTROL	POSITION
AC GND DC (29) (32)	DC
VOLTS/DIV Vernier (26) (35)	CAL
VOLTS/DIV (26) (35)	Push in
VERTICAL MODE/TRIG MODE (36)	ALT and DSPLY
VOLTS/DIV (26) (35)	.2
MAIN TRIG COUPLING (23)	AC
DLY'D TRIG COUPLING (14)	AC
MAIN TRIG SLOPE (22)	+
DLY'D TRIG SLOPE (13)	+
MAIN TRIG SOURCE (20)	INT
DLY'D TRIG SOURCE (11)	INT
TRIG AUTO SINGLE (18)	AUTO
HORIZ MODE SWITCH (16)	NORM
TIME/DIV Vernier (17)	CAL
HORIZ POSITION (6)	Push in
VERT GAIN X1 X5	X1

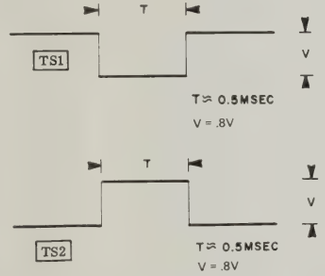

2. Test Steps:
   Connect CAL IV (8) to INPUT (CH1) (31) and INPUT (CH2) (28) and adjust LEVEL-HOR GAIN/STABILITY for stable trace on CRT. Trigger test oscilloscope with CAL (10) signal.

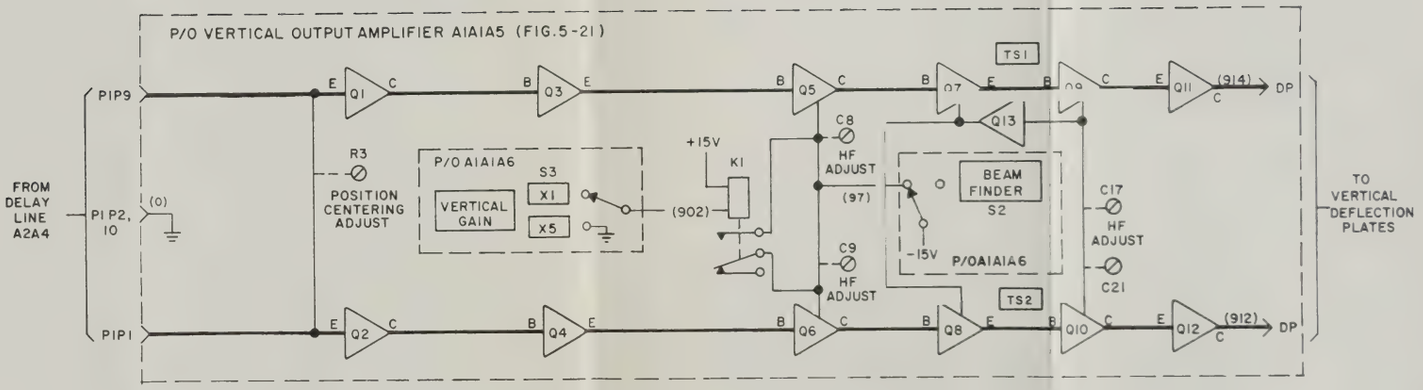

FOR USE ON AN/USM-281E ONLY. REFER TO CHAPTER 5 FOR AN/USM-281D CONFIGURATION.

Figure A-3. Vertical Output Amplifier, Functional Signal Flow Diagram

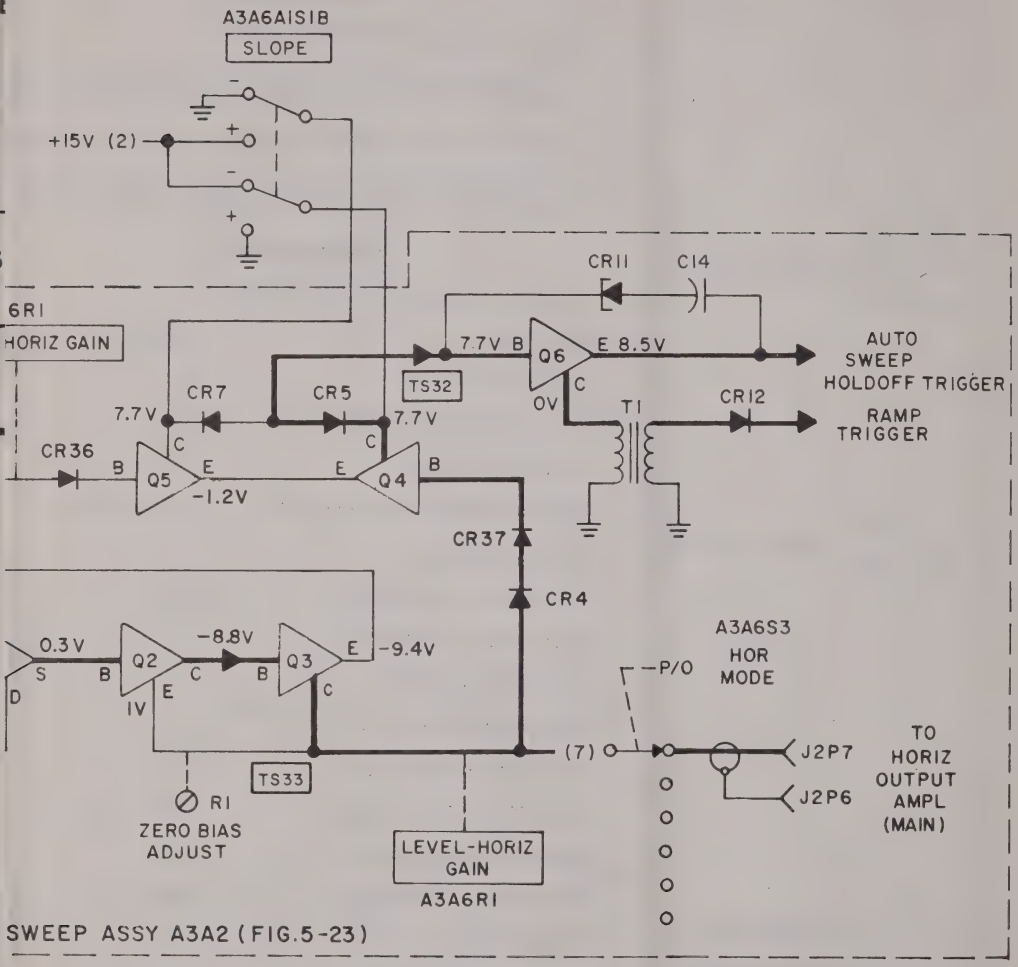

Figure A-4. Main Sweep and Trigger Input Amplifier, Comparator and Pulse Generator, Functional Signal Flow Diagram

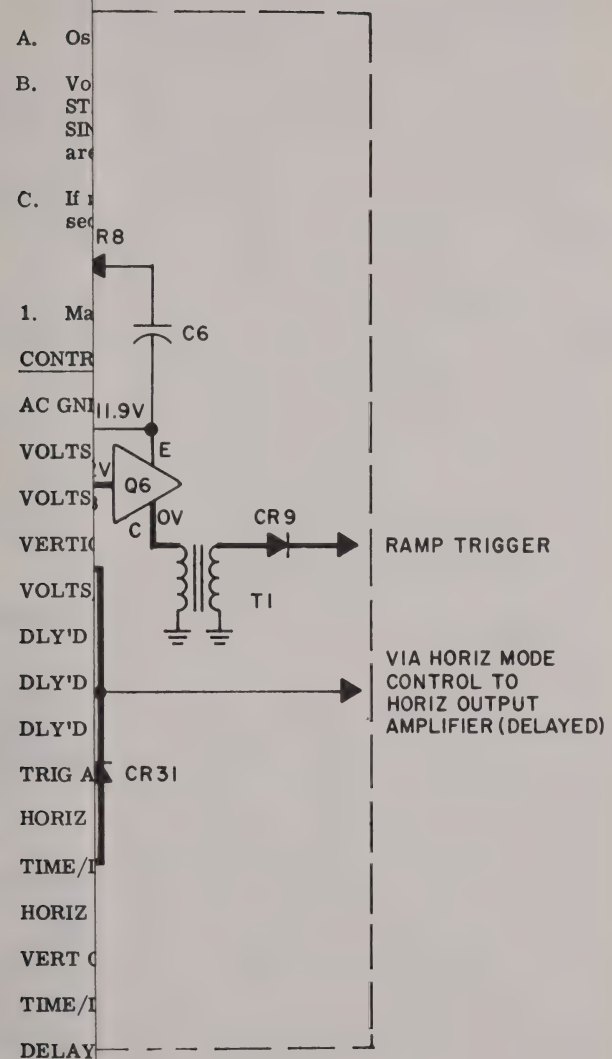

Figure A-5. Delayed SweepTrigger Input Amplifier Comparator, Functional Signal Flow Diagram

TEST DATA

GENERAL NOTES

A. Oscilloscope AN/USM-281 required.

B. Voltages measured with no signal, LEVEL-HOR GAIN/ STABILITY (24) centered, TRIG AUTO SINGLE set at SINGLE. Unless otherwise indicated, waveform tolerances are ±10%.

C. If necessary refer to paragraph 5-25 for troubleshooting sequence and figure 5-23 for location of test points.

SPECIFIC NOTES

1. Make the following control settings:

CONTROL	POSITION
AC GND DC (29) (32)	DC
VOLTS/DIV Vernier (26) (35)	CAL
VOLTS/DIV (26) (35)	Push in
VERTICAL MODE/TRIG MODE (36)	ALT and DSPLY
VOLTS/DIV (26) (35)	.2
MAIN TRIG COUPLING (23)	AC
DLY'D TRIG COUPLING (14)	AC
MAIN TRIG SLOPE (22)	+
DLY'D TRIG SLOPE (13)	+
MAIN TRIG SOURCE (20)	EXT/10
DLY'D TRIG SOURCE (11)	EXT/10
TRIG AUTO SINGLE (18)	TRIG
HORIZ MODE SWITCH (16)	NORM
TIME/DIV Vernier (17)	CAL
HORIZ POSITION (6)	Push in
VERT GAIN X1 X5	X1
TIME/DIV (17)	50 μsec

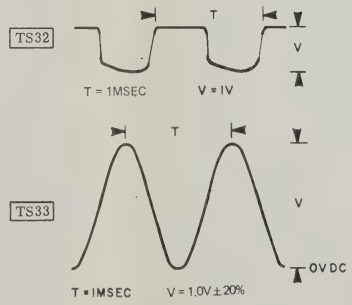

2. Test Steps:
Connect a 1 kHz, 12 volt peak-to-peak sine wave to TRIG IN EXT HOR (21), also trigger test oscilloscope from this signal.

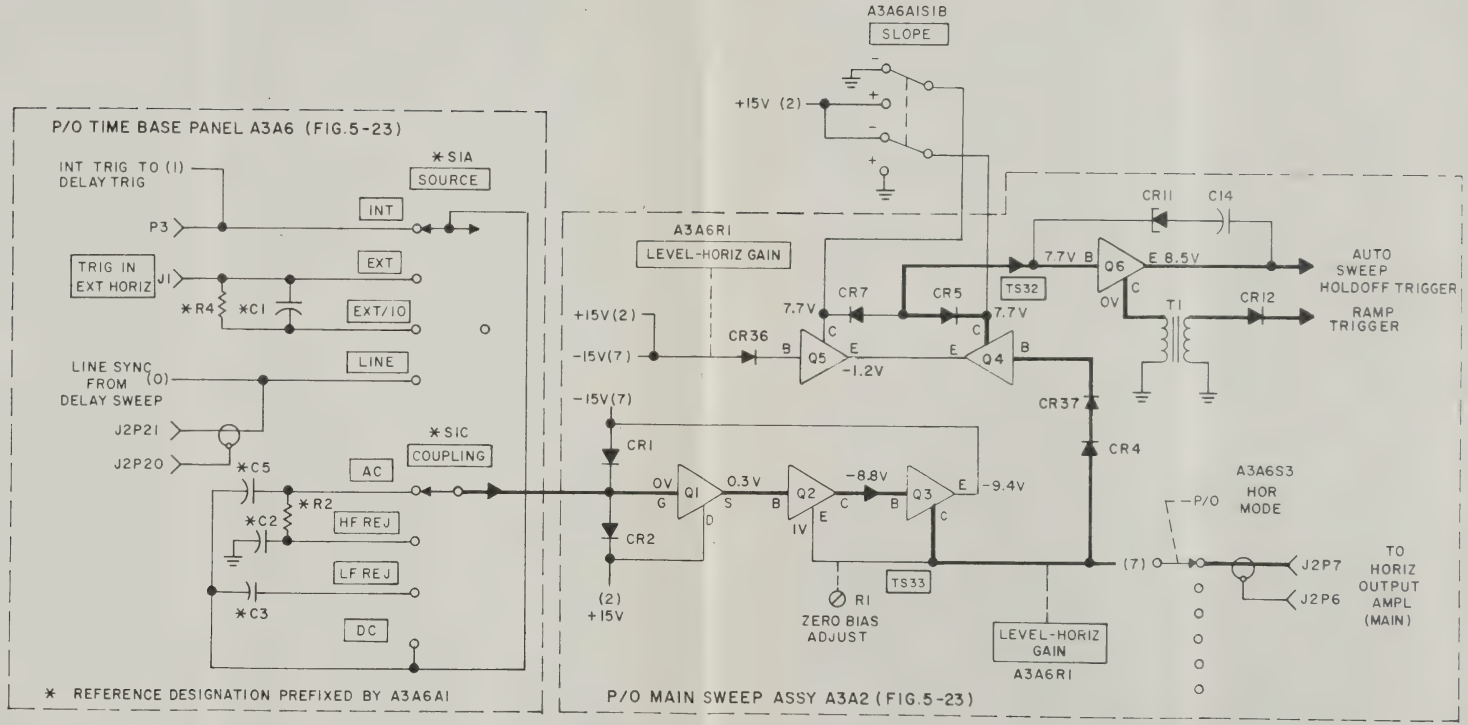

FOR USE ON AN/USM-281E ONLY. REFER TO CHAPTER 5 FOR AN/USM-281D CONFIGURATION.

Figure A-4. Main Sweep and Trigger Input Amplifier, Comparator and Pulse Generator, Functional Signal Flow Diagram

TEST DATA

GENERAL NOTES

A. Oscilloscope AN/USM-281 required.

B. Voltages measured with no signal LEVEL-HOR GAIN/ STABILITY (24) centered, TRIG AUTO SINGLE (18) at SINGLE. Unless otherwise indicated, waveform tolerances are ±10%.

C. If necessary refer to paragraph 5-28 for troubleshooting sequence and figure 5-24 for test point location.

SPECIFIC NOTES

1. Make the following control settings:

CONTROL	POSITION
AC GND DC (29) (32)	DC
VOLTS/DIV Vernier (26) (35)	CAL
VOLTS/DIV (26) (35)	Push in
VERTICAL MODE/TRIG MODE (36)	ALT and DSPLY
VOLTS/DIV (26) (35)	.2
DLY'D TRIG COUPLING (14)	AC
DLY'D TRIG SLOPE (13)	+
DLY'D TRIG SOURCE (11)	EXT/10
TRIG AUTO SINGLE (18)	TRIG
HORIZ MODE SWITCH (16)	DLY'D
TIME/DIV Vernier (17)	CAL
HORIZ POSITION (6)	Push in
VERT GAIN X1 X5 (4)	X1
TIME/DIV (17)	50 μsec
DELAY VERNIER (9)	1
LEVEL (15)	0

TS37

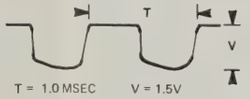

TS38

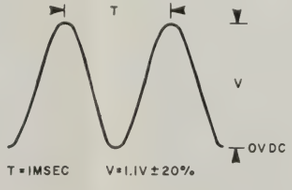

2. Test Steps:

Connect a 1 kHz, 12 volt peak-to-peak sine wave to TRIG IN EXT HOR (21), also trigger test oscilloscope from this signal.

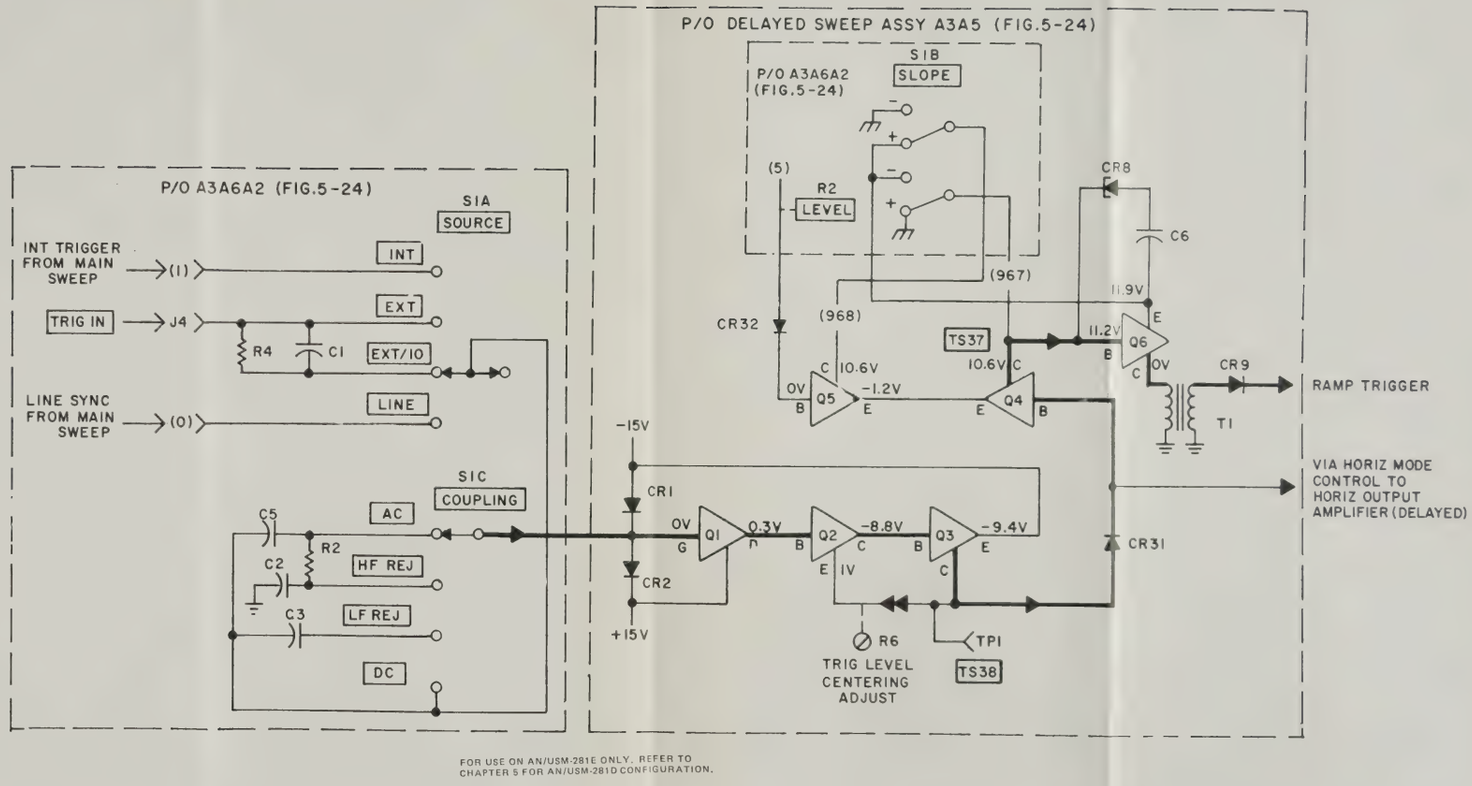

FOR USE ON AN/USM-281E ONLY. REFER TO CHAPTER 5 FOR AN/USM-281D CONFIGURATION.

Figure A-5. Delayed SweepTrigger Input Amplifier Comparator, Functional Signal Flow Diagram

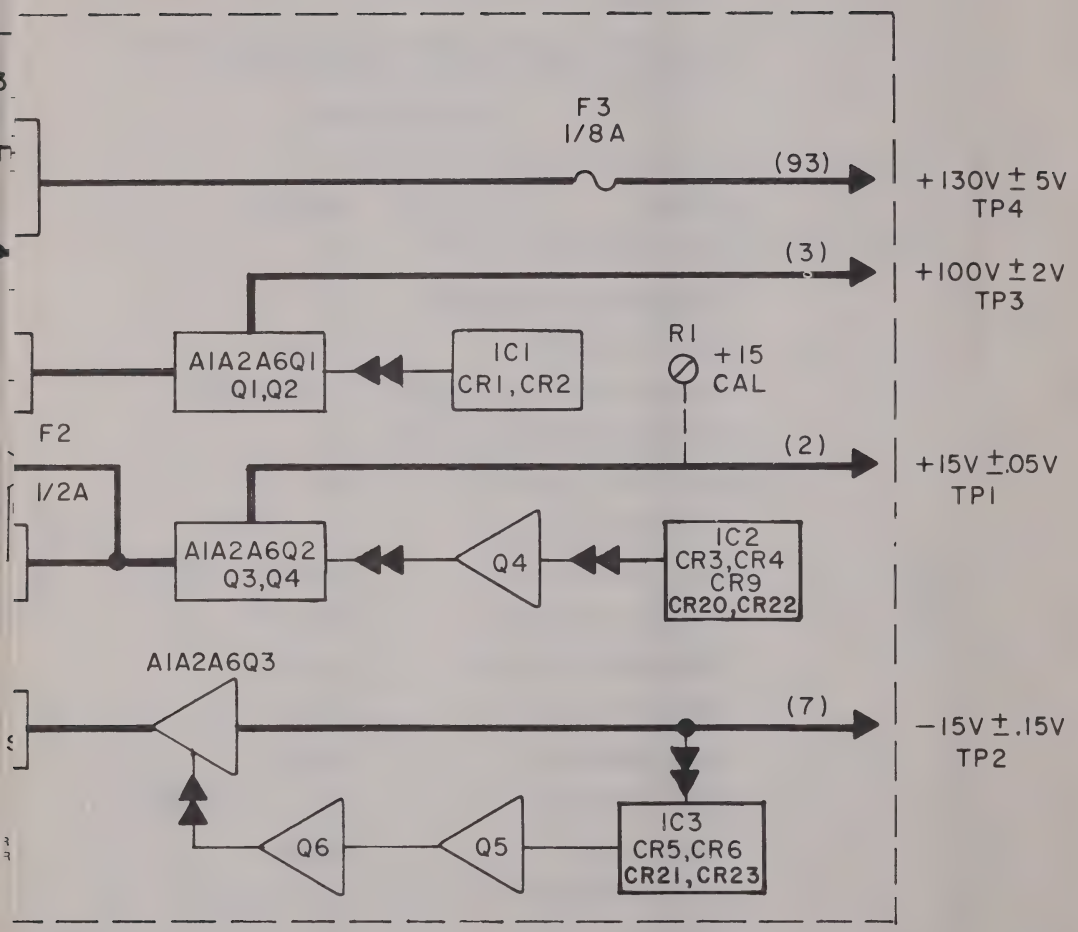

Figure A-6. Low Voltage Power Supply, Functional Signal Flow Diagram

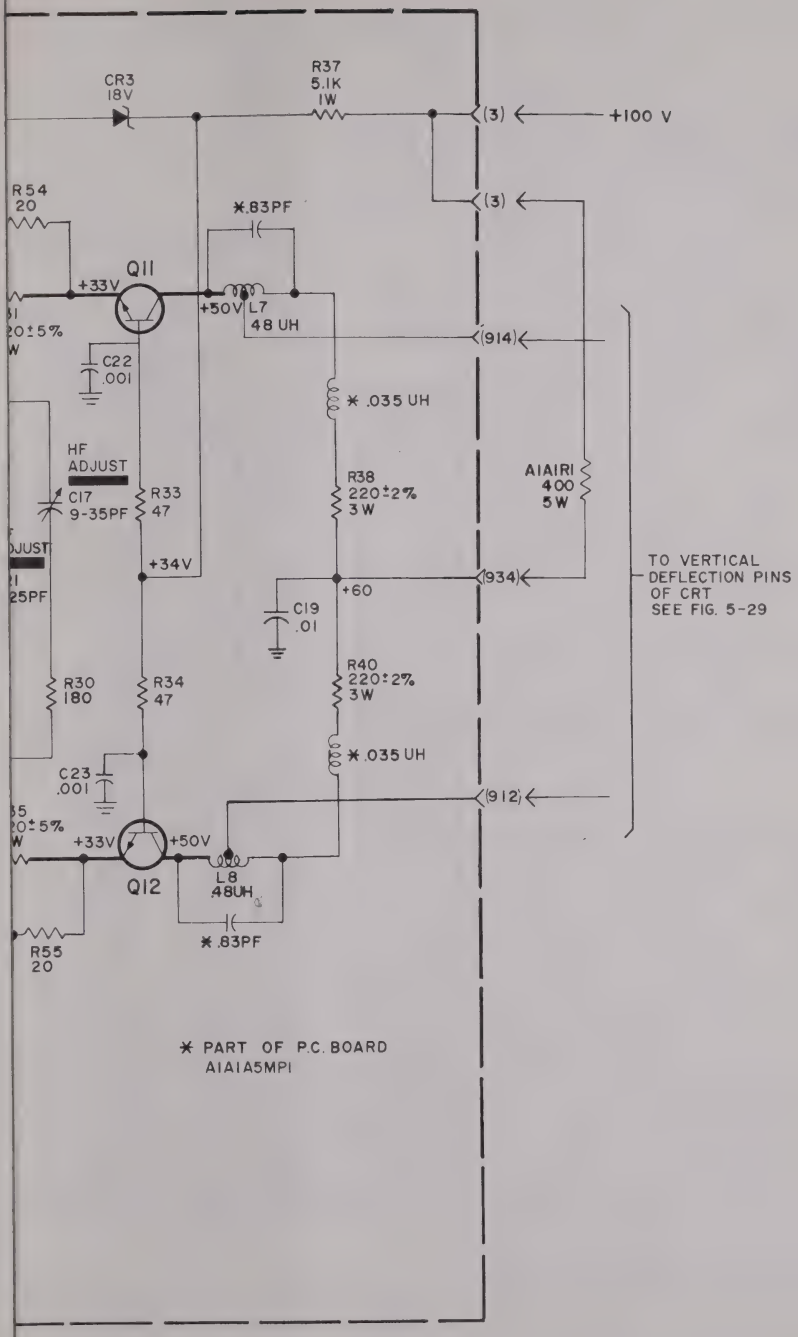

Figure A-7. Vertical Output Amplifier

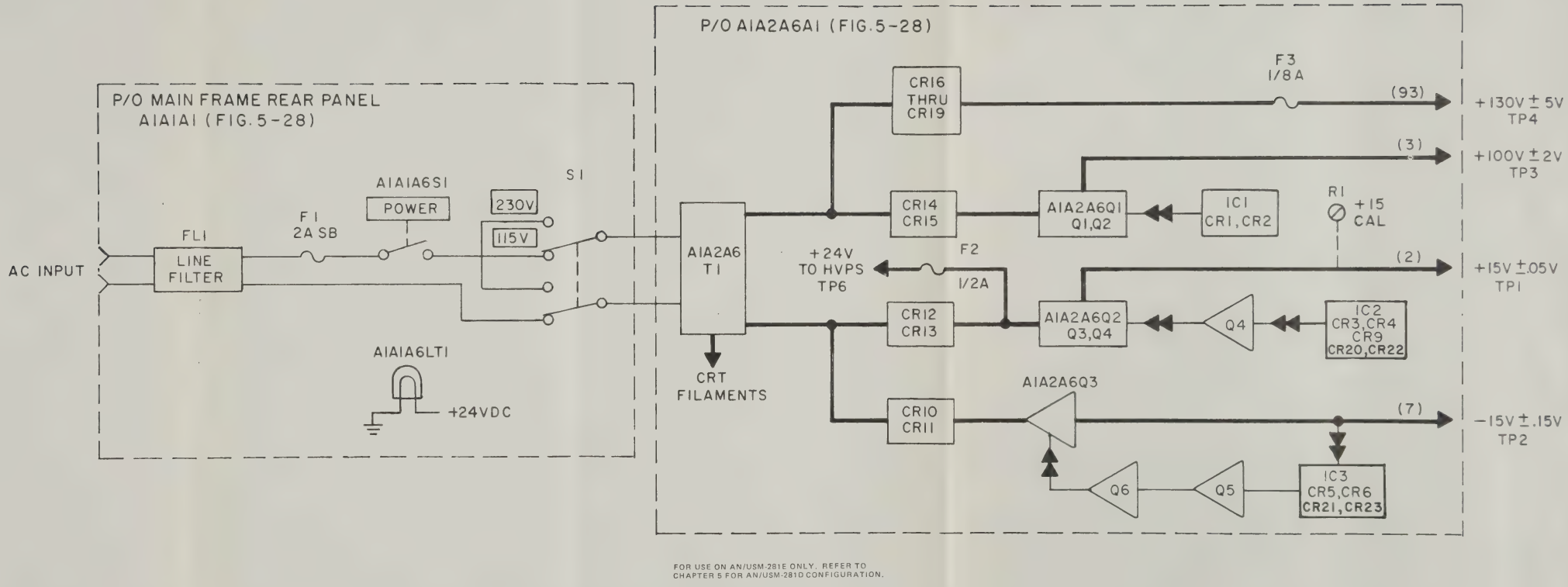

Figure A-6. Low Voltage Power Supply, Functional Signal Flow Diagram

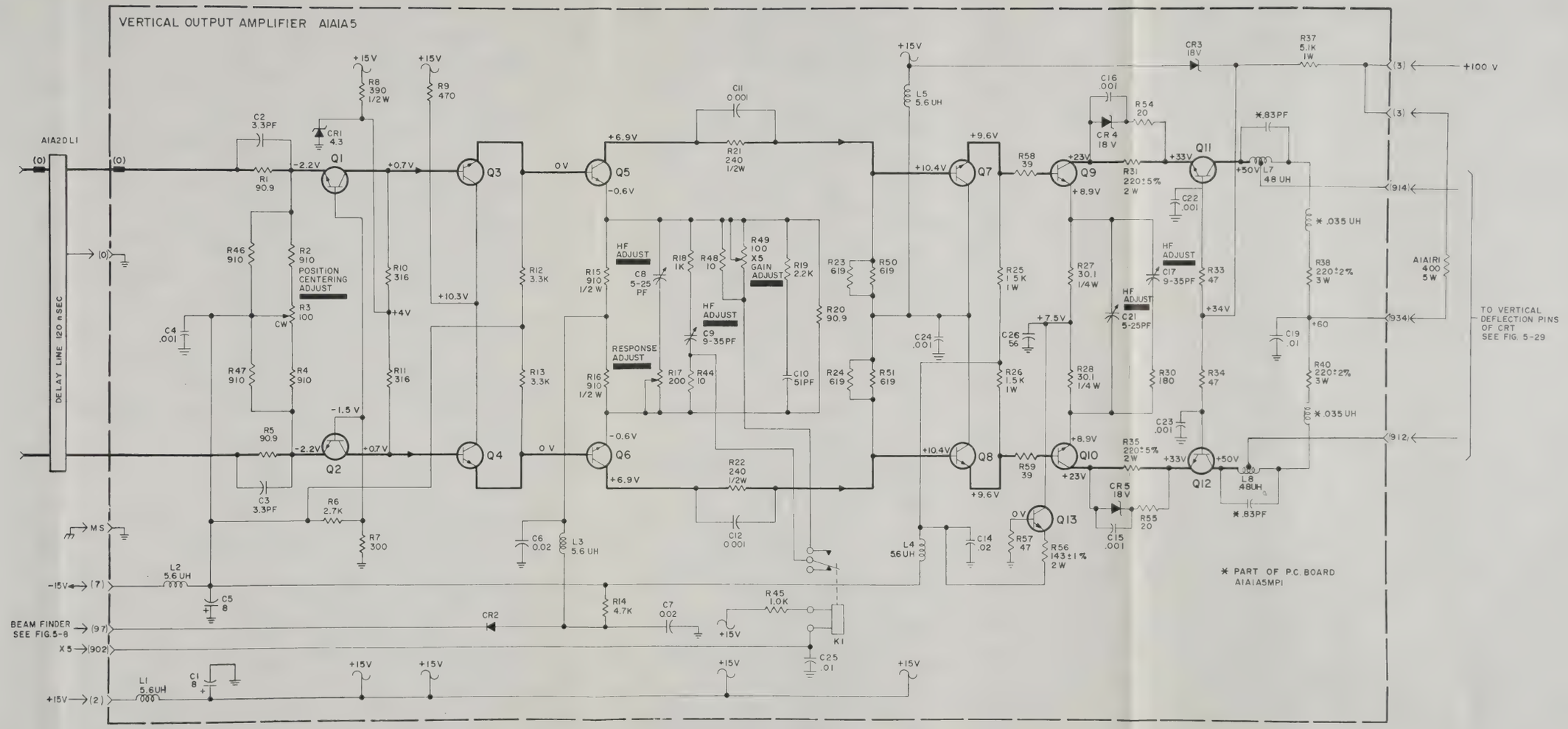

Figure A-7. Vertical Output Amplifier

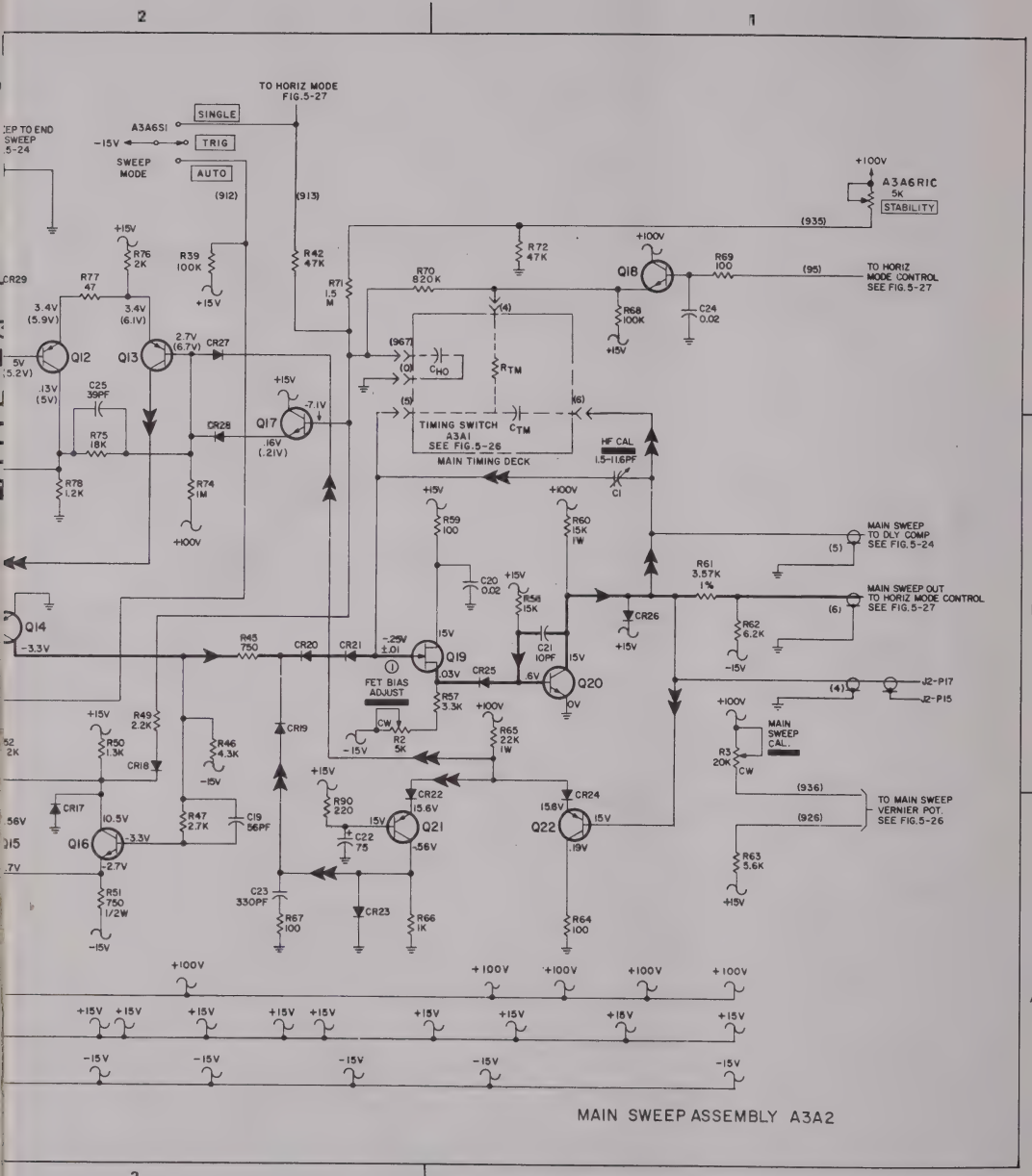

Figure A-8. Main Trigger and Sweep Generator

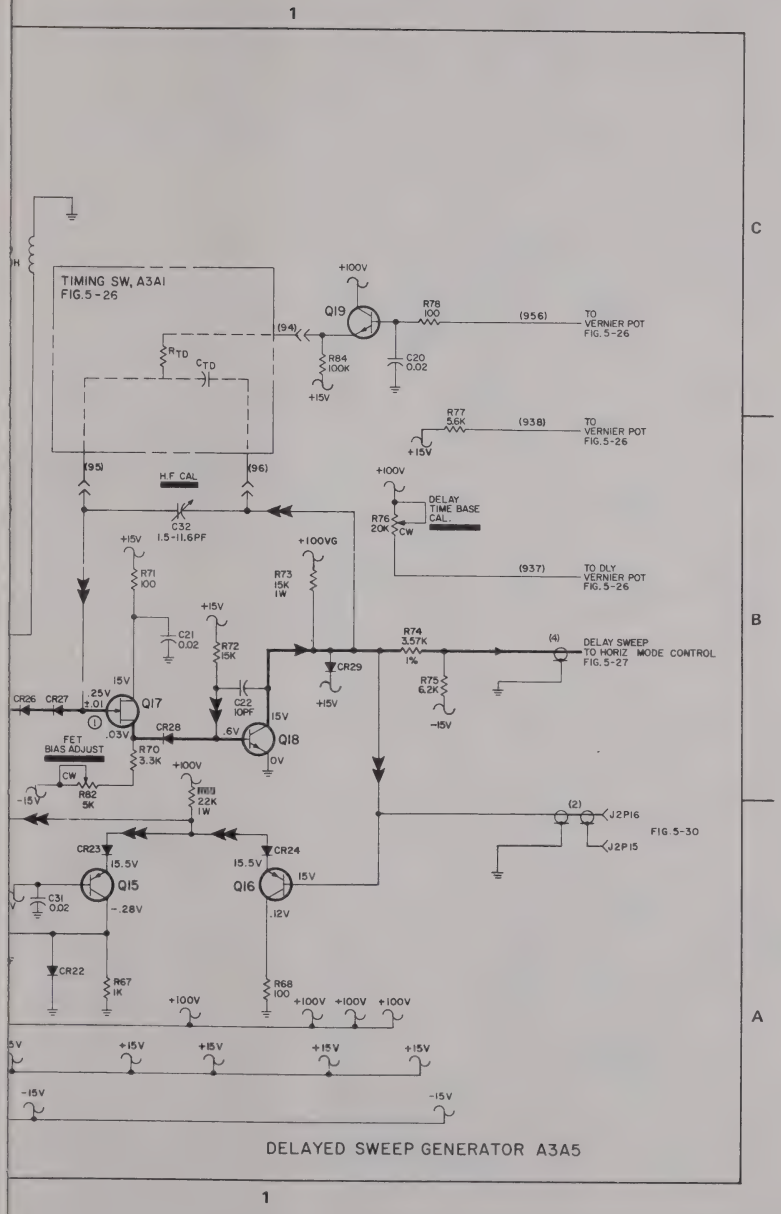

Figure A-9. Delayed Trigger and Sweep Generator

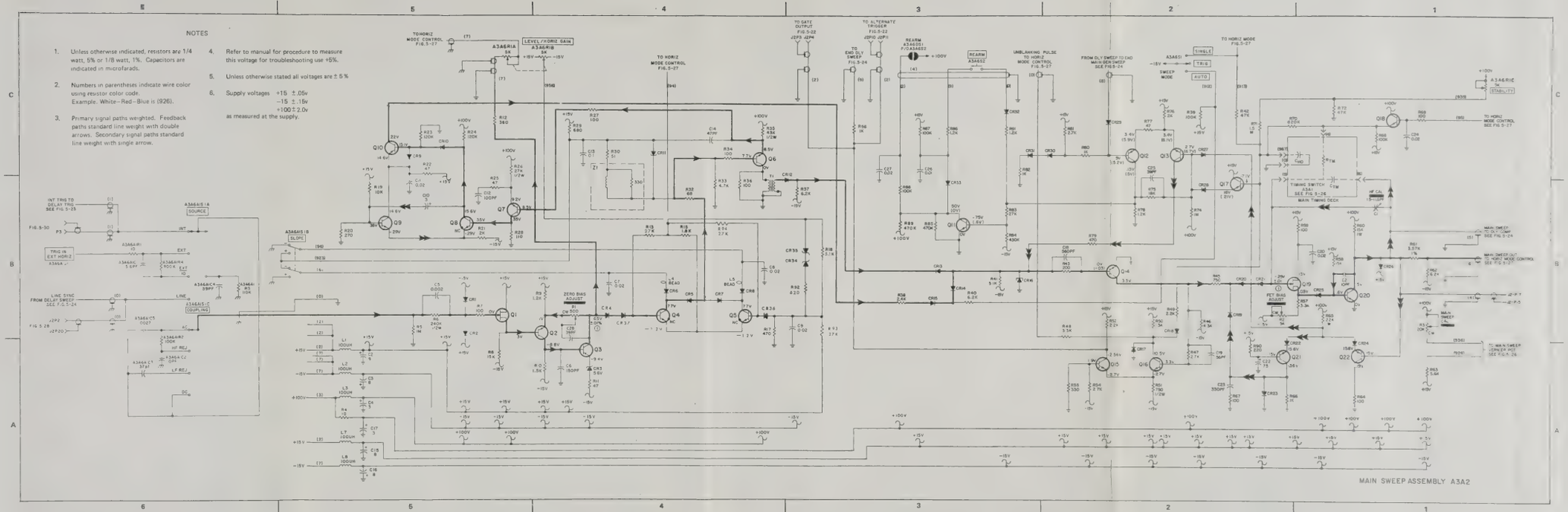

NOTES

1. Unless otherwise indicated, resistors are 1/4 watt, 5% or 1/8 watt, 1%. Capacitors are indicated in microfarads.
2. Numbers in parentheses indicate wire color using resistor color code. Example. White–Red–Blue is (926).
3. Primary signal paths weighted. Feedback paths standard line weight with double arrows. Secondary signal paths standard line weight with single arrow.
4. Refer to manual for procedure to measure this voltage for troubleshooting use +5%.
5. Unless otherwise stated all voltages are ± 5 %
6. Supply voltages +15 ±.05v
   −15 ±.15v
   +100 ±2.0v
   as measured at the supply.

PART LOCATION INDEX

REF DES	ZONE	REF DES	ZONE	REF DES	ZONE	REF DES	ZONE
C1	5B	[illegible]	[illegible]	Q22	1A	R49	2B
C2	5A	[illegible]	[illegible]	R1	4B	R50	2B
C3	5A	[illegible]	[illegible]	R2	2B	R51	2A
C4	5A	[illegible]	[illegible]	R3	1B	R52	2B
C5	5B	[illegible]	[illegible]	R4	5A	R54	2A
C6	4A	[illegible]	[illegible]	R5	5B	R55	2A
C7	4B	[illegible]	[illegible]	R6	5B	R56	3C
C8	4B	[illegible]	[illegible]	R7	5B	R57	1B
C9	4B	CR28	2B	R8	5A	R58	1B
C10	5B	CR29	2C	R9	4B	R59	1B
C11	5B	[illegible]	[illegible]	R10	4A	R60	1B
C12	5B	[illegible]	[illegible]	R11	4A	R61	1B
C13	4C	[illegible]	[illegible]	R13	4B	R62	1B
C14	4C	[illegible]	[illegible]	R14	4B	R63	1A
C15	5A	[illegible]	[illegible]	R15	4B	R64	1A
C16	5A	[illegible]	[illegible]	R16	4B	R65	1B
C17	5A	[illegible]	[illegible]	R17	4B	R66	2A
C18	5B	[illegible]	[illegible]	R18	5B	R67	2A
C19	2B	[illegible]	[illegible]	R19	5B	R68	1C
C20	2A	[illegible]	[illegible]	R20	5B	R69	1C
C21	1B	[illegible]	[illegible]	R21	5B	R70	2C
C22	2A	[illegible]	[illegible]	R22	5C	R71	2C
C23	2A	L5	4B	R23	5C	R72	2B
C24	1C	L7	5A	R24	5C	R73	2B
C25	2C	[illegible]	[illegible]	R25	5B	R74	2C
C26	2C	[illegible]	[illegible]	R26	5C	R75	2C
C27	2C	Q2	4B	R27	4C	R76	2B
C28	4A	Q3	4A	R28	5B	R77	2B
CR1	5B	Q4	4B	R29	4C	R78	2B
CR2	5B	Q5	4B	R30	4C	R79	2B
[illegible]	4A	Q6	4C	R32	4B	R80	2C
[illegible]	4B	Q7	5B	R33	4B	R81	2C
[illegible]	4B	Q8	5B	R34	4C	R82	3C
[illegible]	4B	Q9	5B	R35	4C	R83	3B
[illegible]	4B	Q10	5C	R36	4B	R84	3B
[illegible]	4B	Q11	3B	R37	3B	R85	3B
[illegible]	5C	Q12	2C	R38	3B	R86	3C
[illegible]	5C	Q13	2C	R39	2C	R87	3C
[illegible]	4C	Q14	2B	R40	3B	R88	3B
[illegible]	4C	Q15	2A	R41	3B	R89	3B
[illegible]	3B	Q16	2A	R42	2C	R90	2A
[illegible]	3B	Q17	2B	R43	2B	R91	3C
[illegible]	3B	Q18	1C	R45	2B	R92	3B
[illegible]	3B	Q19	2B	R46	2B	R93	3B
[illegible]	2A	Q20	1B	R47	2A	R94	4B
[illegible]	2B	Q21	2A	R48	2A	T1	4B
						Z1	4C

FOR USE ON AN/USM-281E ONLY. REFER TO CHAPTER 5 FOR AN/USM-281D CONFIGURATION.

Figure A-8. Main Trigger and Sweep Generator

PARTS LOCATION INDEX

REF DES	ZONE	REF DES	ZONE	REF DES	ZONE	REF DES	ZONE
C1	4B	CR14	2B	R1	4B	R50	2B
C2	3A	CR15	2B	R2	4B	R51	2A
C3	3B	CR16	1C	R3	4B	R52	2A
C4	3B	CR17	1C	R4	4B	R53	2A
C5	4C	CR18	2B	R5	3B	R54	2A
C6	3C	CR19	2B	R6	3B	R55	2A
C7	2B	CR20	2A	R7	3A	R57	2A
C8	4A	CR21	2A	R8	3A	R58	2A
C9	4A	CR22	1A	R9	3B	R59	2A
C10	4A	CR23	1A	R11	4C	R60	2A
C11	3C	CR24	1A	R12	4C	R61	1C
C12	2C	CR25	1B	R14	3C	R62	1C
C13	2C	CR26	1B	R15	3C	R63	1A
C14	2C	CR27	1B	R16	3C	R64	1A
C15	2C	CR28	1B	R17	3C	R65	1B
C16	2B	CR29	1B	R18	3C	R66	1A
C17	2C	CR30	2A	R19	3C	R67	1A
C18	2C	CR31	3B	R20	3B	R68	1A
C19	2B	CR32	3B	R22	3B	R69	1A
C20	1C	L1	4A	R23	3B	R70	1B
C21	1B	L2	4A	R24	3C	R71	1B
C22	1B	L3	3B	R25	2C	R72	1B
C23	2B	L4	3B	R26	2C	R73	1B
C24	4A	L6	4A	R27	3B	R74	1B
C25	4A	L7	4A	R28	2B	R75	1B
C26	4A	L8	1C	R29	2C	R76	1B
C27	2A			R30	2C	R77	1B
C28	2A	Q1	4B	R31	2C	R78	1C
C29	1A	Q2	3B	R32	2C	R79	4A
C30	1A	Q3	3B	R33	2C	R80	4A
C31	1A	Q4	3B	R34	2B	R81	2C
C32	1B	Q5	3C	R35	2B	R82	1B
C33	2D	Q6	3C	R36	2C	R83	1C
		Q7	2D	R37	2C	R84	1C
CR1	4B	Q8	2B	R38	2C	R85	1C
CR2	4B	Q9	2A	R39	2B	R86	3B
CR3	3A	Q10	2A	R40	2C	R87	3A
CR4	3A	Q11	2A	R41	2B	R88	3B
CR5	3B	Q12	2B	R42	2C	R89	3A
CR6	3B	Q13	2C	R43	2C		
CR7	3B	Q14	1C	R44	2B	T1	3C
CR8	3C	Q15	1A	R45	2B		
CR9	3C	Q16	1A	R46	1B	TP1	3B
CR10	3B	Q17	1B	R47	2B		
CR11	3B	Q18	1D	R48	2B	Z1	4C
CR12	3B	Q19	1C				
CR13	3B	Q20	2C				

NOTES

1. Unless otherwise indicated, resistors are 1/4 watt, 5% or 1/8 watt, 1%. Capacitors are indicated in microfarads.
2. Numbers in parentheses indicate wire color using resistor color code. Example: White–Red–Blue is (926).
3. Primary signal paths weighted. Feedback paths standard line weight with double arrows. Secondary signal paths standard line weight with single arrow.
4. Supply voltages +15 ±.05v
   −15 ±.15v
   +100 ±2.0v
   as measured at the supply.

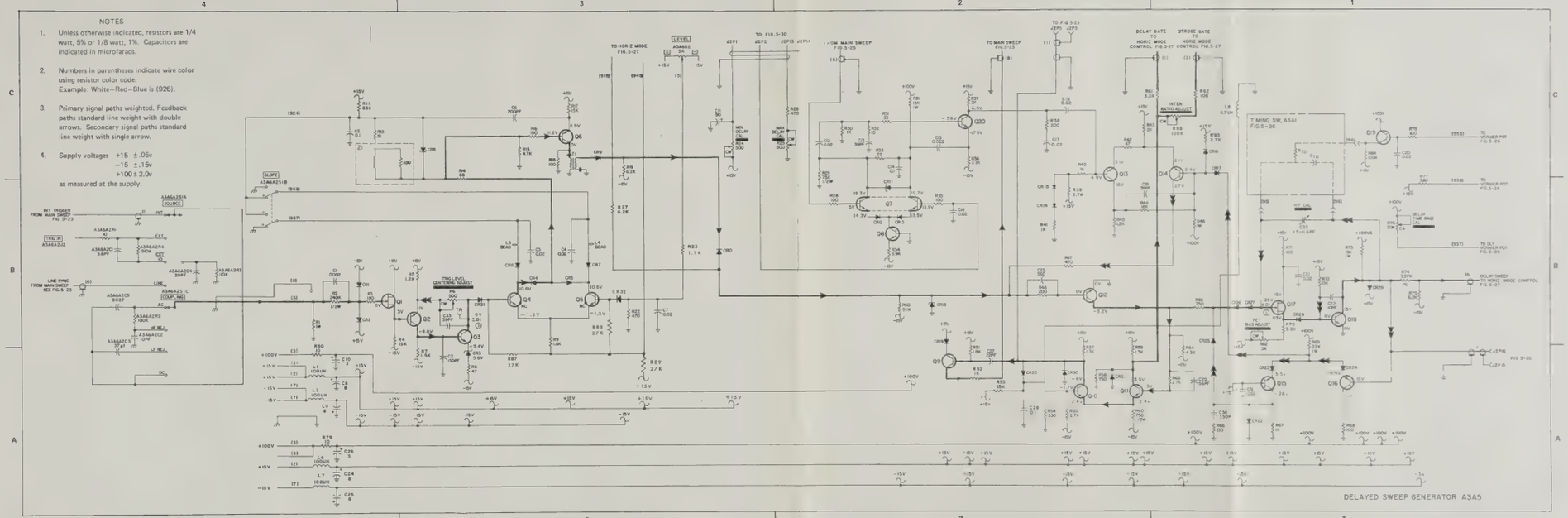

FOR USE ON AN/USM-281E ONLY. REFER TO CHAPTER 5 FOR AN/USM-281D CONFIGURATION.

Figure A-9. Delayed Trigger and Sweep Generator

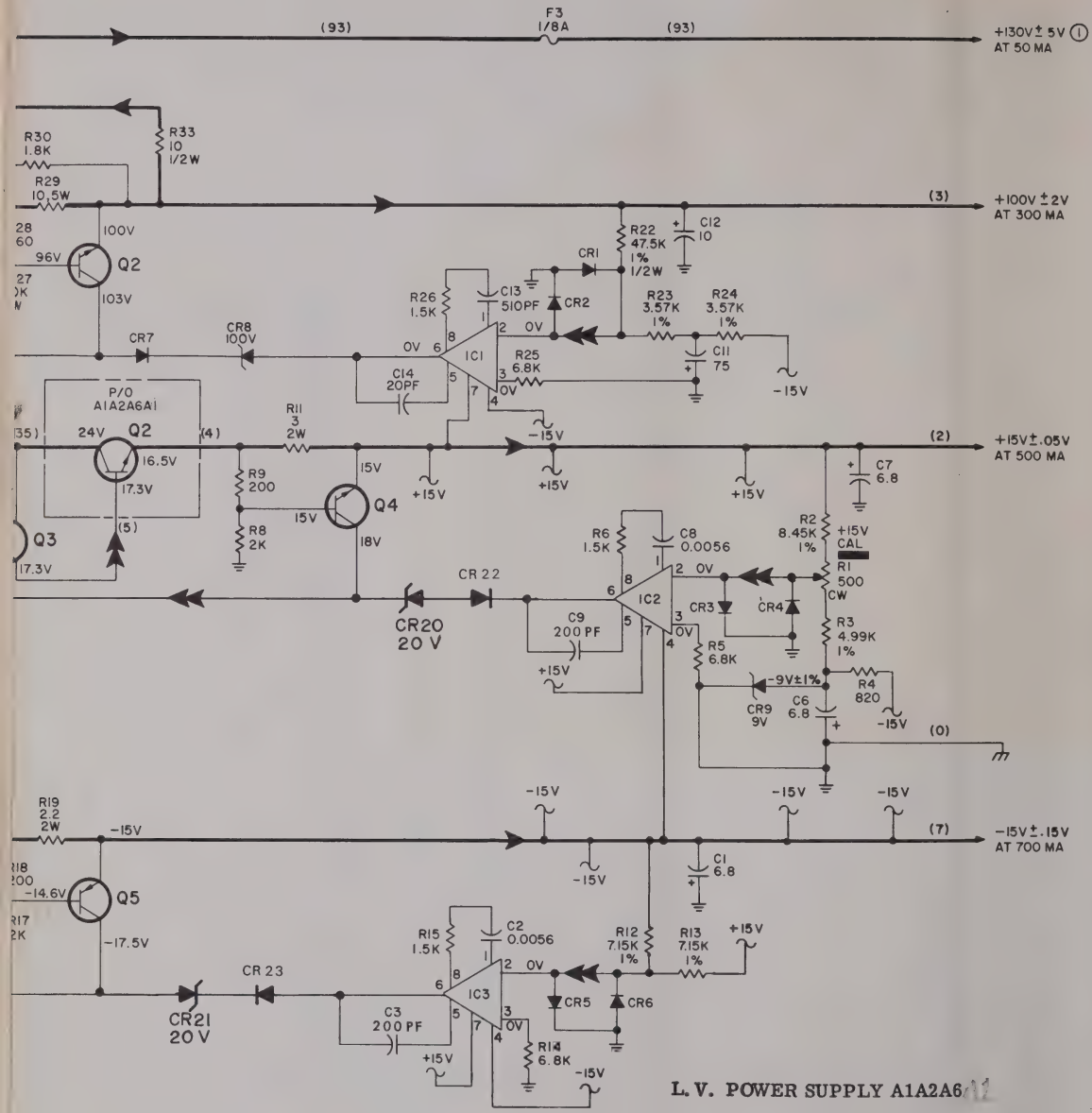

Figure A-10. Low Voltage Power Supply

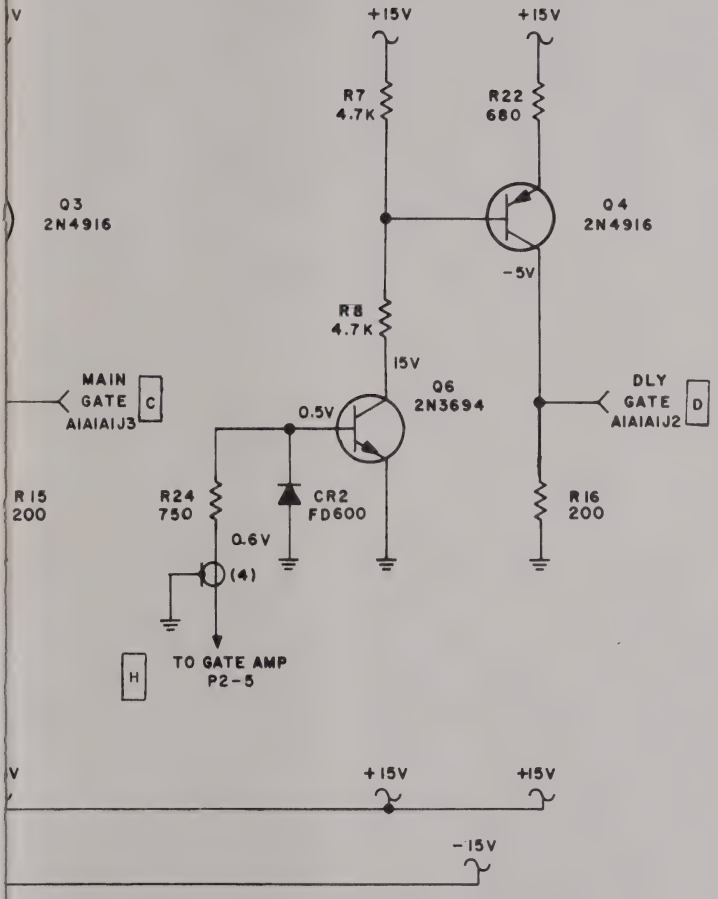

Figure A-11. Auxiliary Output Amplifier

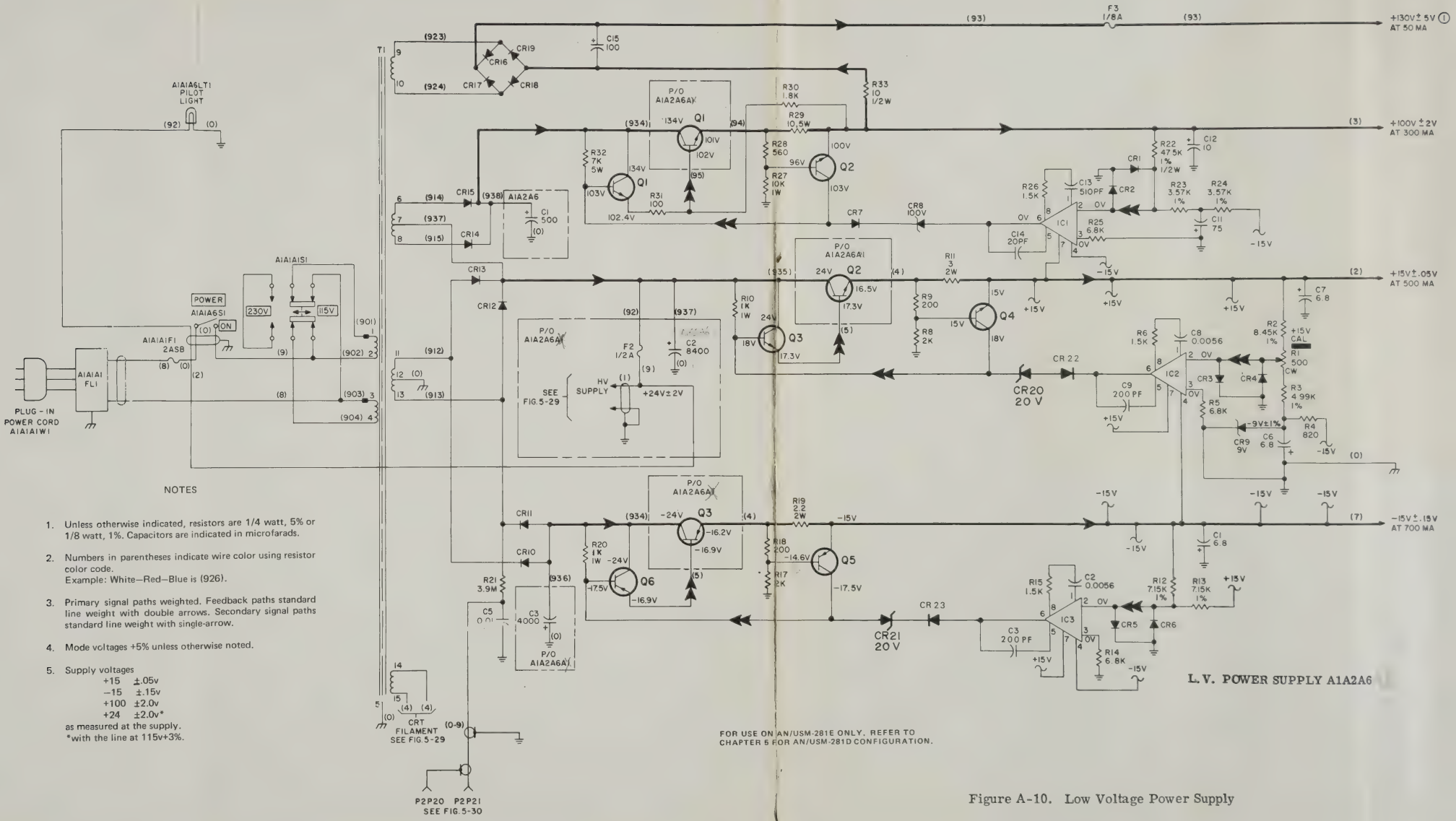

NOTES

1. Unless otherwise indicated, resistors are 1/4 watt, 5% or 1/8 watt, 1%. Capacitors are indicated in microfarads.
2. Numbers in parentheses indicate wire color using resistor color code.
   Example: White–Red–Blue is (926).
3. Primary signal paths weighted. Feedback paths standard line weight with double arrows. Secondary signal paths standard line weight with single-arrow.
4. Mode voltages +5% unless otherwise noted.
5. Supply voltages

+15	±.05v
−15	±.15v
+100	±2.0v
+24	±2.0v*

   as measured at the supply.
   *with the line at 115v+3%.

Figure A-10. Low Voltage Power Supply

For waveform measurements, set controls as follows:

CONTROL	SET TO
AC GND DC (29) (32)	DC
VOLTS/DIV (26) (35)	.2
Vernier	CAL
Invert	Pull
VERTICAL MODE (36)	ALT
TRIG MODE	DSPLY
MAIN TRIG COUPLING (23)	AC
DLY'D TRIG COUPLING (14)	AC
MAIN TRIG SLOPE (22)	+
DLY'D TRIG SLOPE (13)	+
MAIN TRIG SOURCE (20)	INT
DLY'D TRIG SOURCE (11)	INT
AUTO TRIG SINGLE (18)	AUTO
HORIZ MODE SWITCH (16)	INTEN
TIME/DIV Vernier (17)	CAL
HORIZ POSITION X10 (6)	Push in
TIME/DIV (Main) (17)	1mSEC
TIME/DIV (Delayed) (17)	2mSEC
DELAY Vernier (9)	4.00

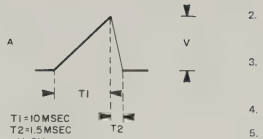

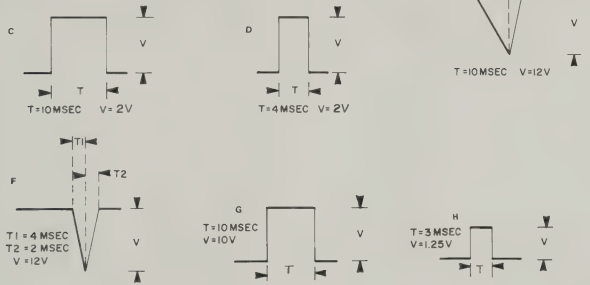

NOTES

1. Unless otherwise indicated, resistors are 1/4 watt, 5% or 1/8 watt, 1%. Capacitors are indicated in microfarads.
2. Numbers in parentheses indicate wire color using resistor color code.
   Example: White–Red–Blue is (926).
3. Primary signal paths weighted. Feedback paths standard line weight with double arrows. Secondary signal paths standard line weight with single-arrow.
4. Mode voltages +5% unless otherwise noted.
5. Supply voltages
   +15 +.05v
   −15 +.15v
   +100 +2.0v
   +24 +2.0v*
   as measured at the supply.
   *with the line at 115v+3%.

NOTE: Reference designators are prefixed by A1A1A1A1 unless otherwise indicated.

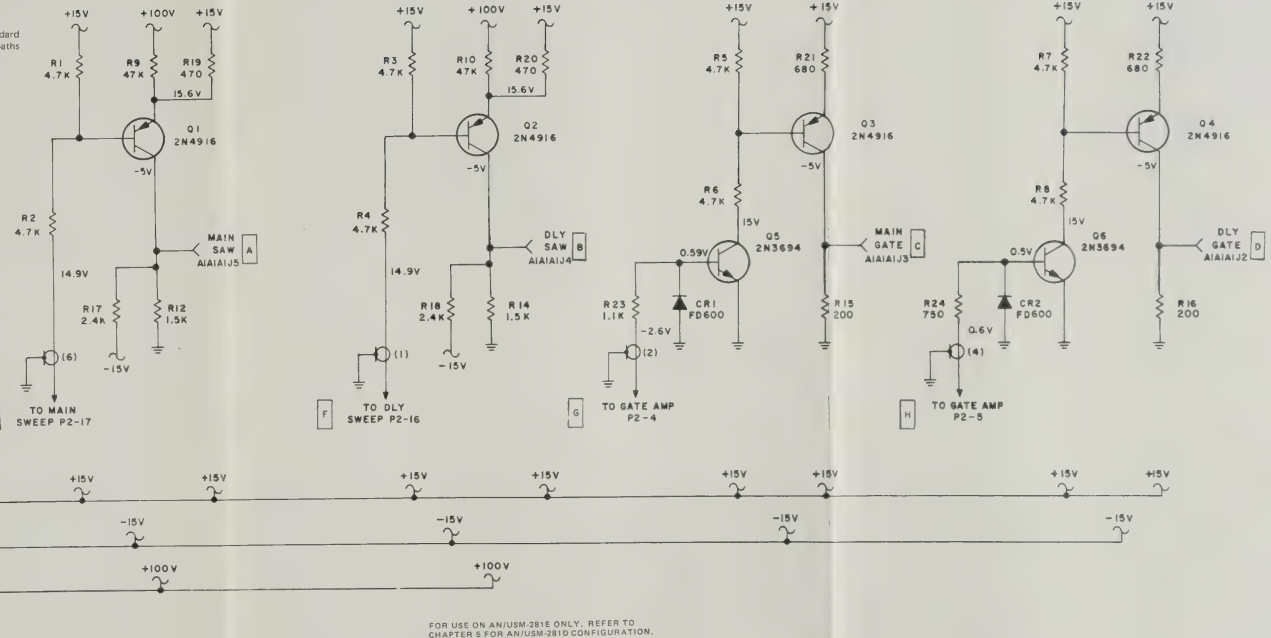

FOR USE ON AN/USM-281E ONLY. REFER TO CHAPTER 5 FOR AN/USM-281D CONFIGURATION.

Figure A-11. Auxiliary Output Amplifier

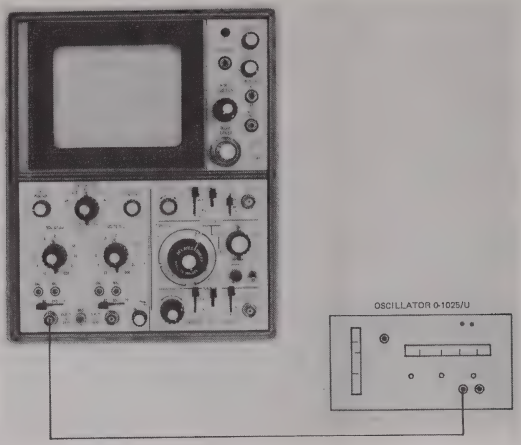

Figure A-12. Vertical Position Centering Adjustment, Test Setup

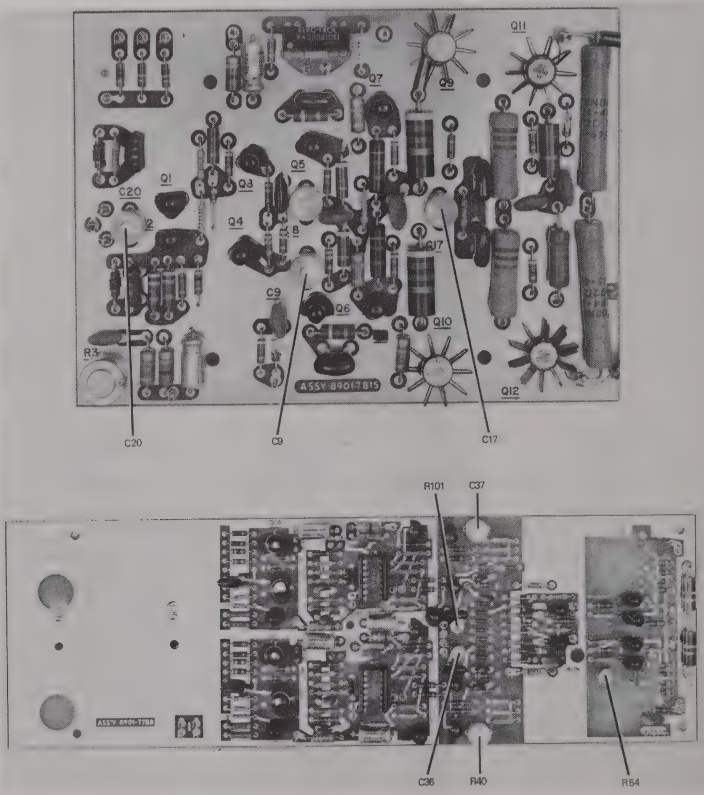

Figure A-13. Vertical Amplifier Response Adjustments

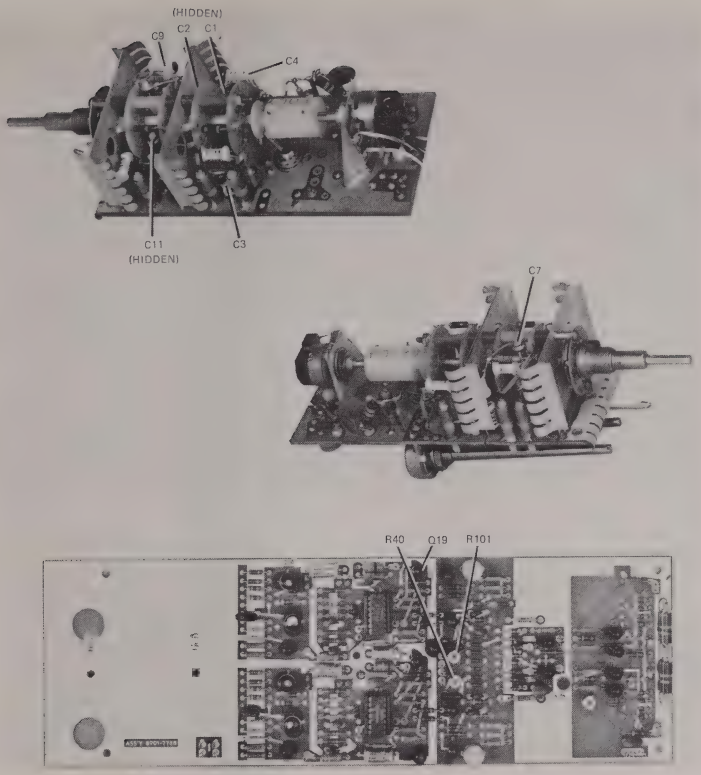

Figure A-14. Attenuator and Input Capacitance Adjustments

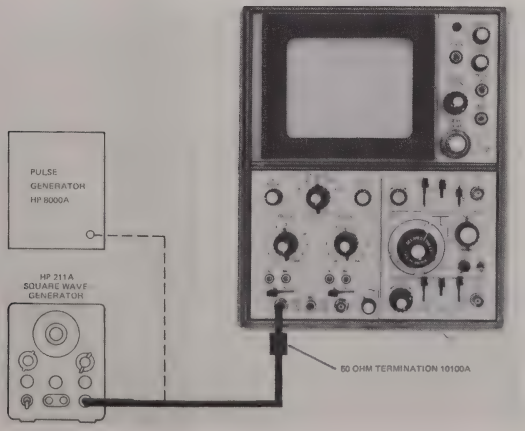

Figure A-15. Attenuator and Capacitance Adjustment, Test Setup

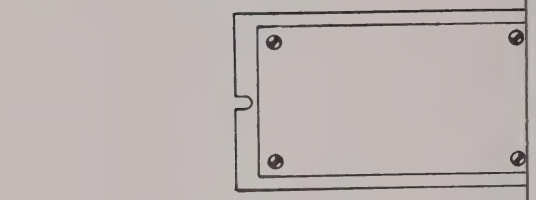

VIEW B-B

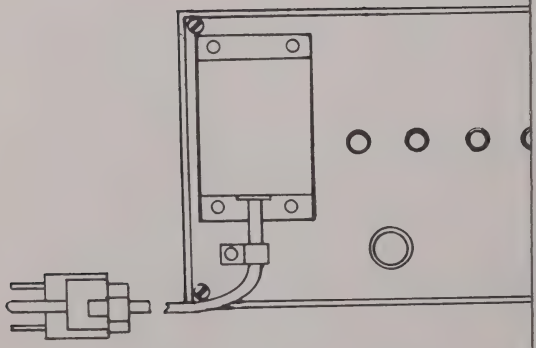

VIEW C-C

Figure A-16. Display Section Assembly (A1A1) (Sheet 1 of 2)

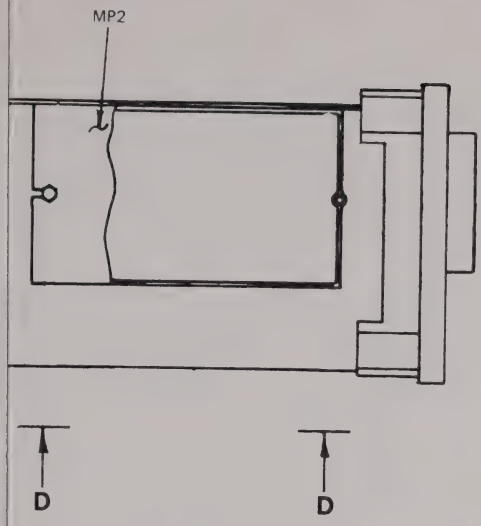

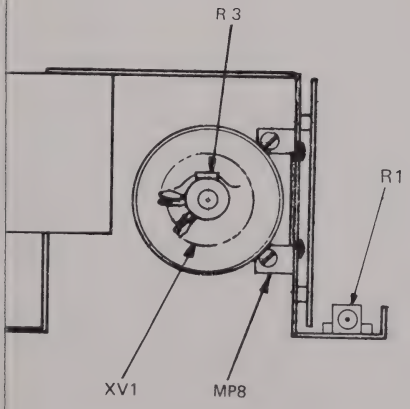

VIEW C-C

y (A1A1) (Sheet 2 of 2)

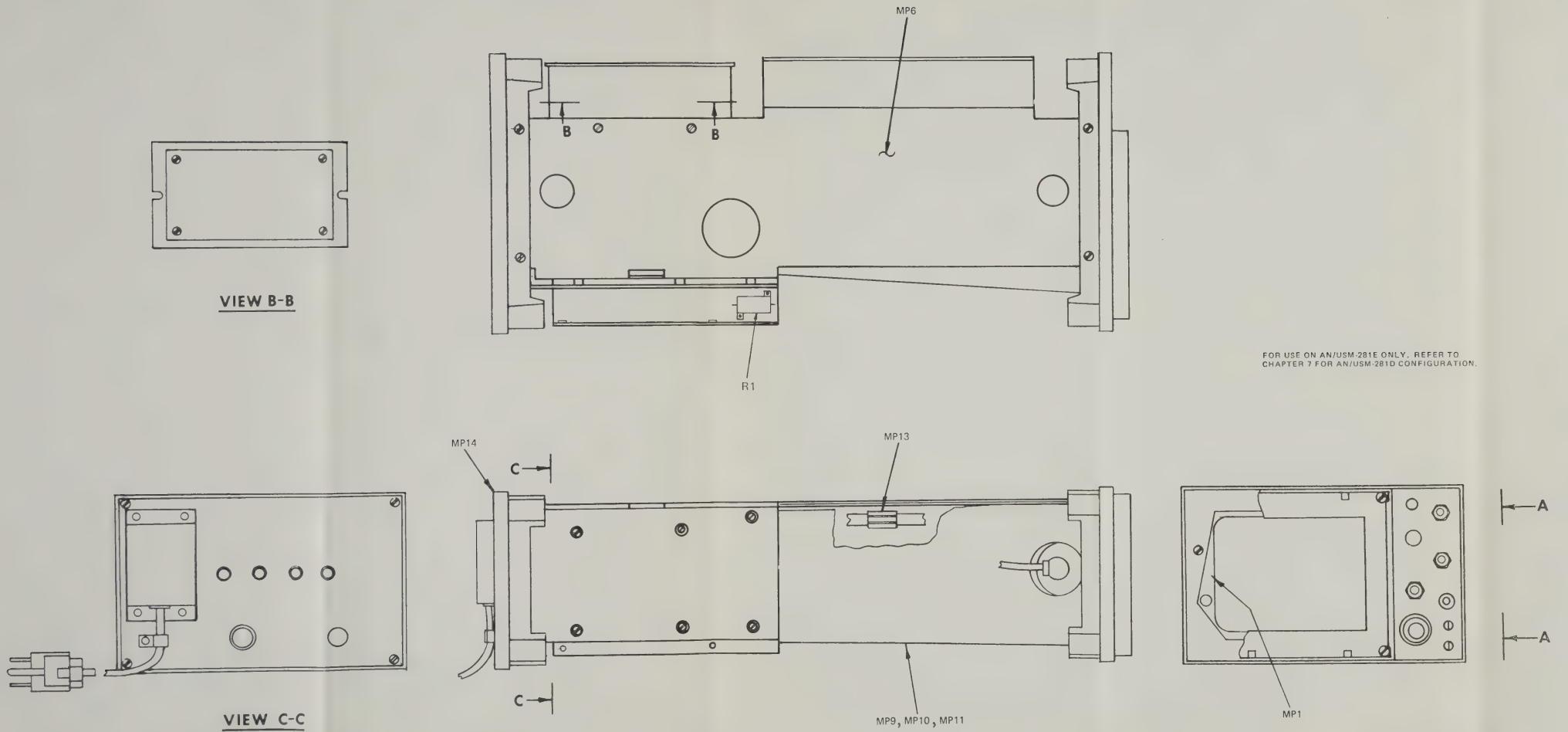

Figure A-16. Display Section Assembly (A1A1) (Sheet 1 of 2)

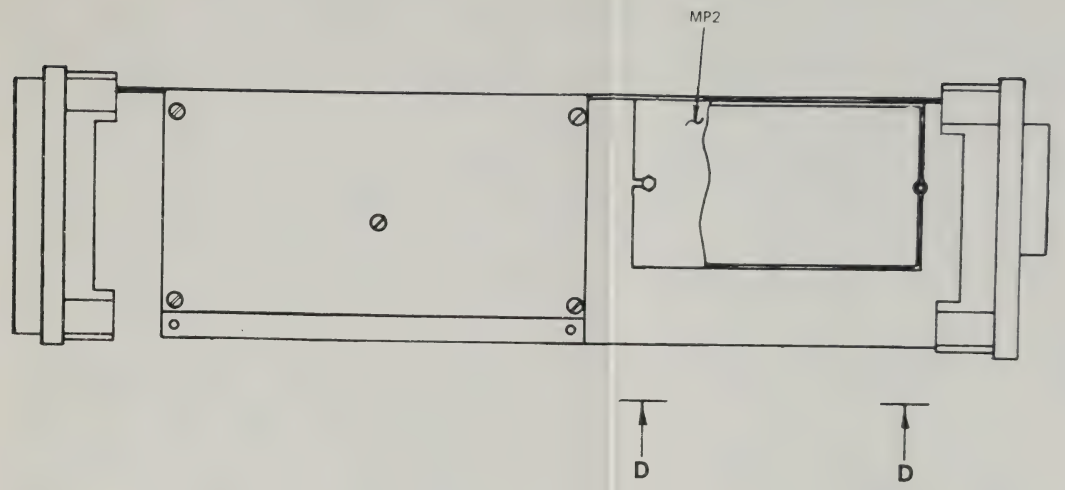

VIEW A-A

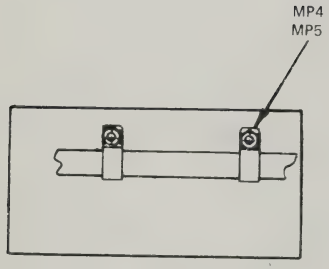

VIEW D-D

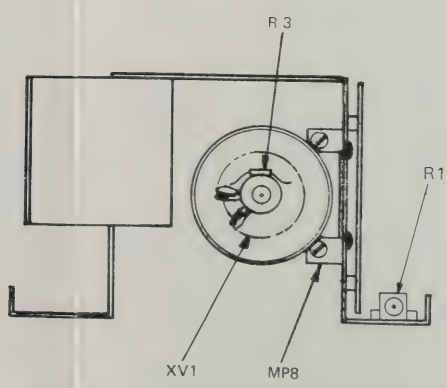

VIEW C-C

FOR USE ON AN/USM-281E ONLY. REFER TO CHAPTER 7 FOR AN/USM-281D CONFIGURATION.

Figure A-16. Display Section Assembly (A1A1) (Sheet 2 of 2)

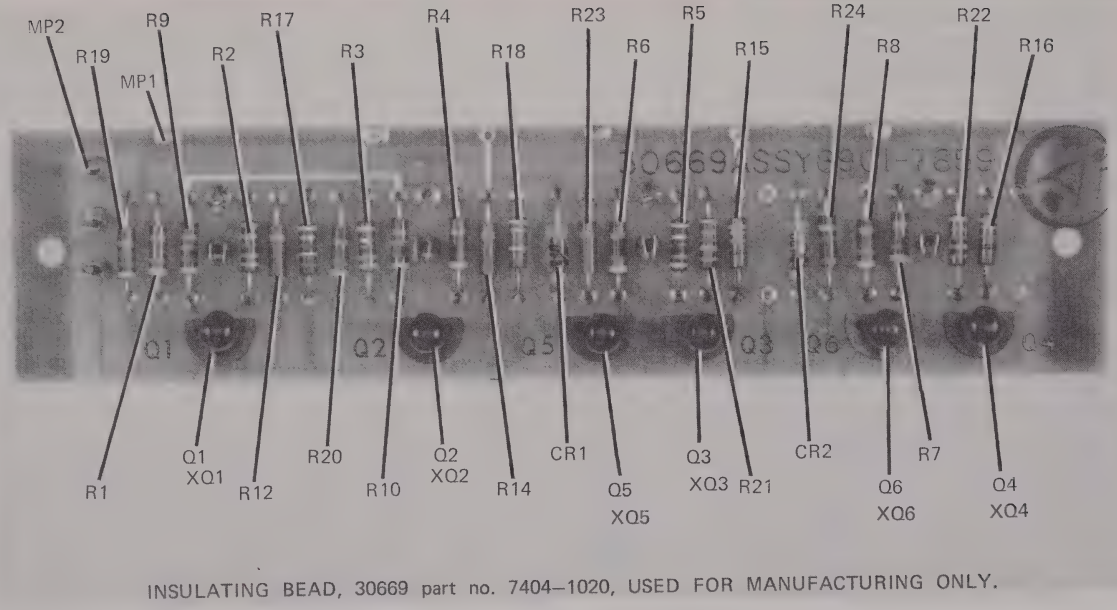

INSULATING BEAD, 30669 part no. 7404–1020, USED FOR MANUFACTURING ONLY.

Figure A-17. Auxiliary Output Assembly (A1A1A1A1)

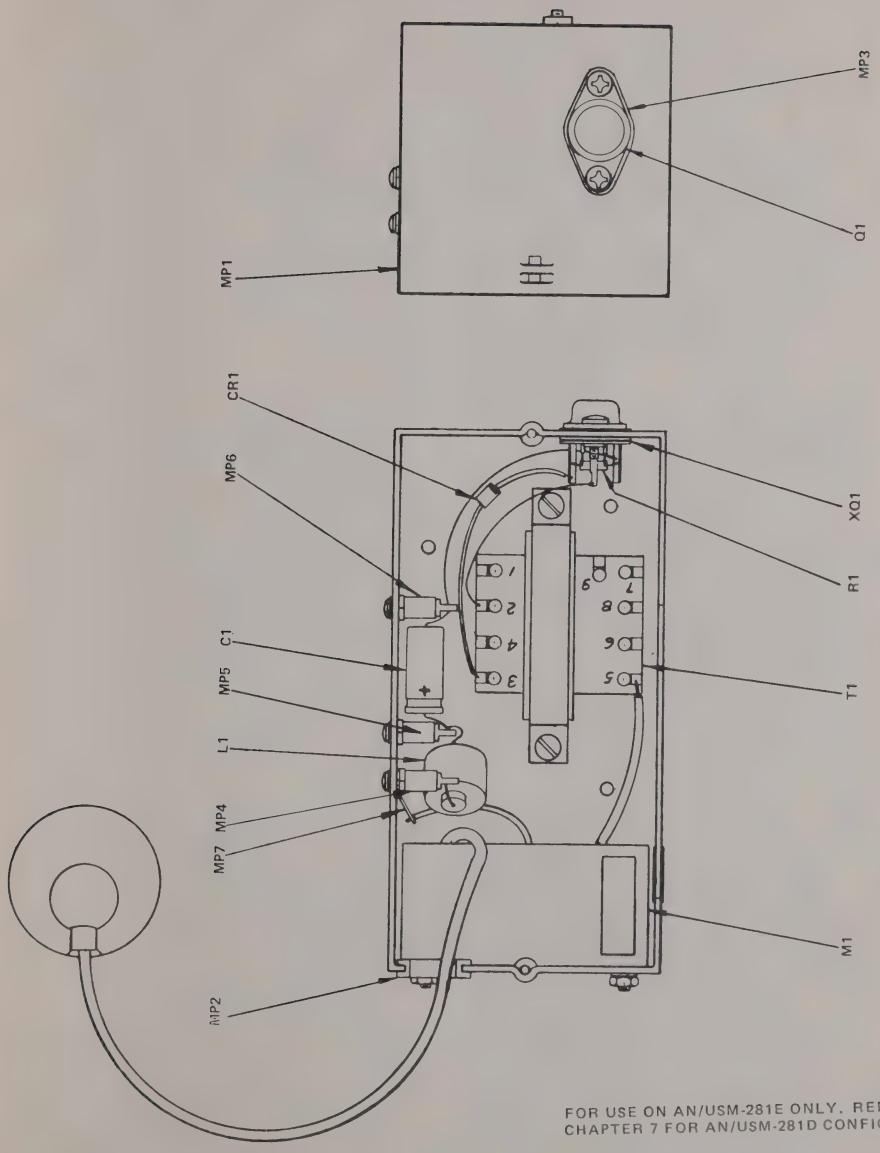

Figure A-18. High Voltage Chassis Assembly (A1A1A4)

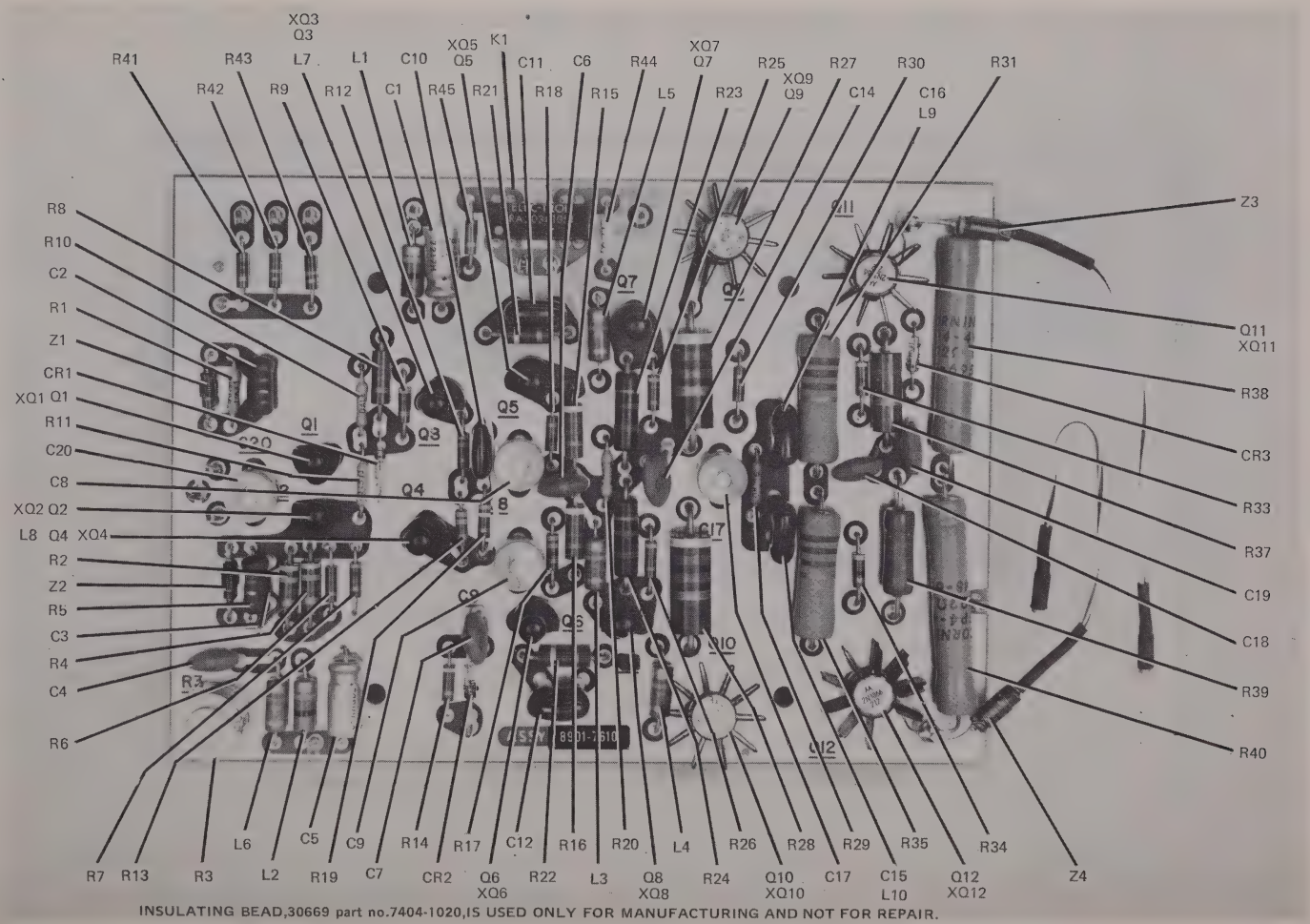

Figure A-19. Vertical Output Assembly (A1A1A5) (Sheet 1 of 2)

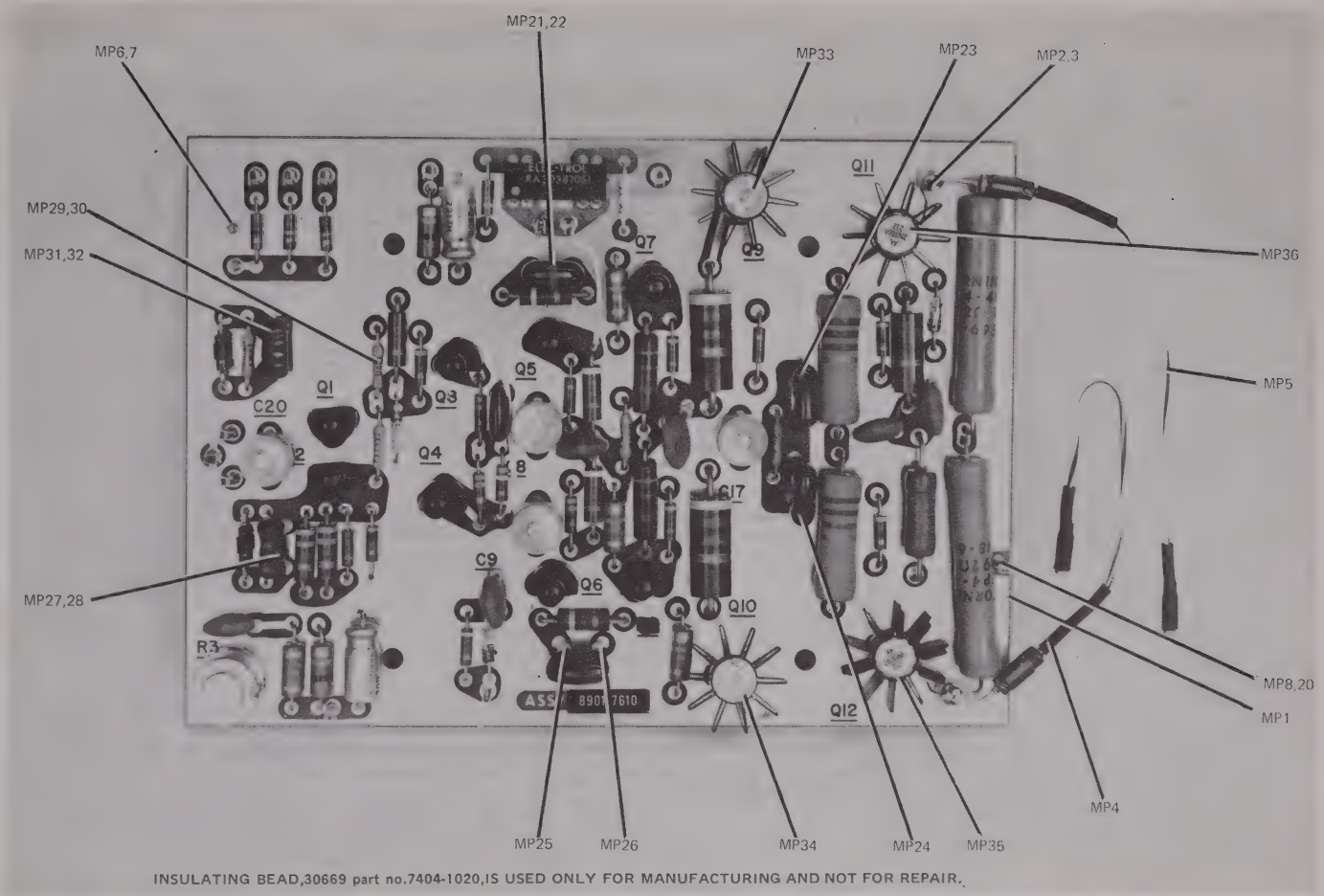

Figure A-19. Vertical Output Assembly (A1A1A5) (Sheet 2 of 2)

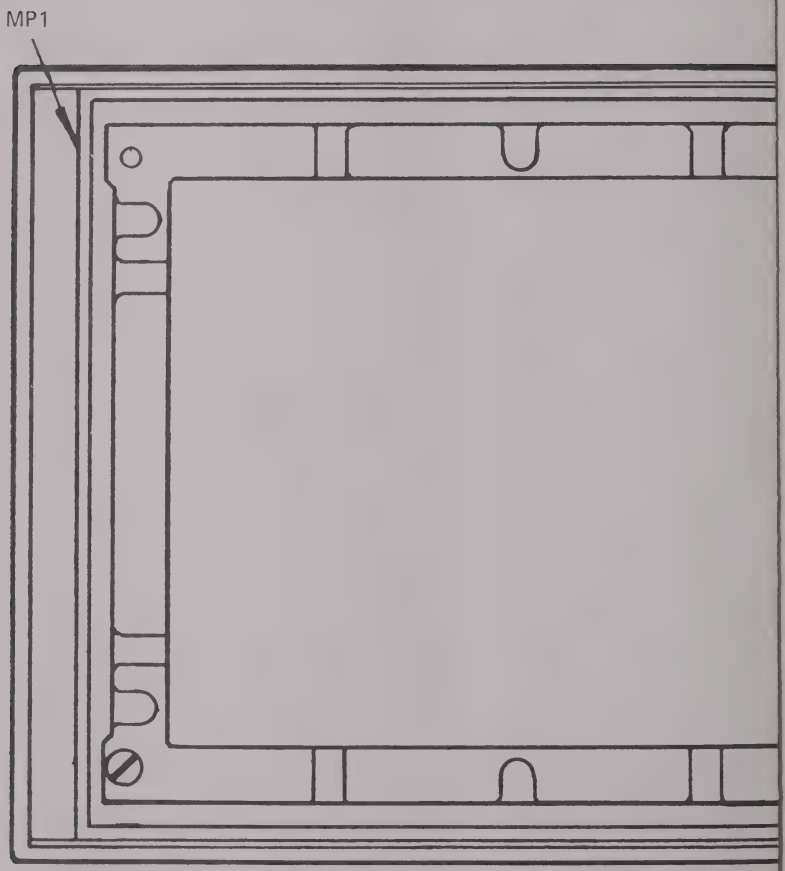

Figure A-20. Display Panel Assembly (A1A1A6)

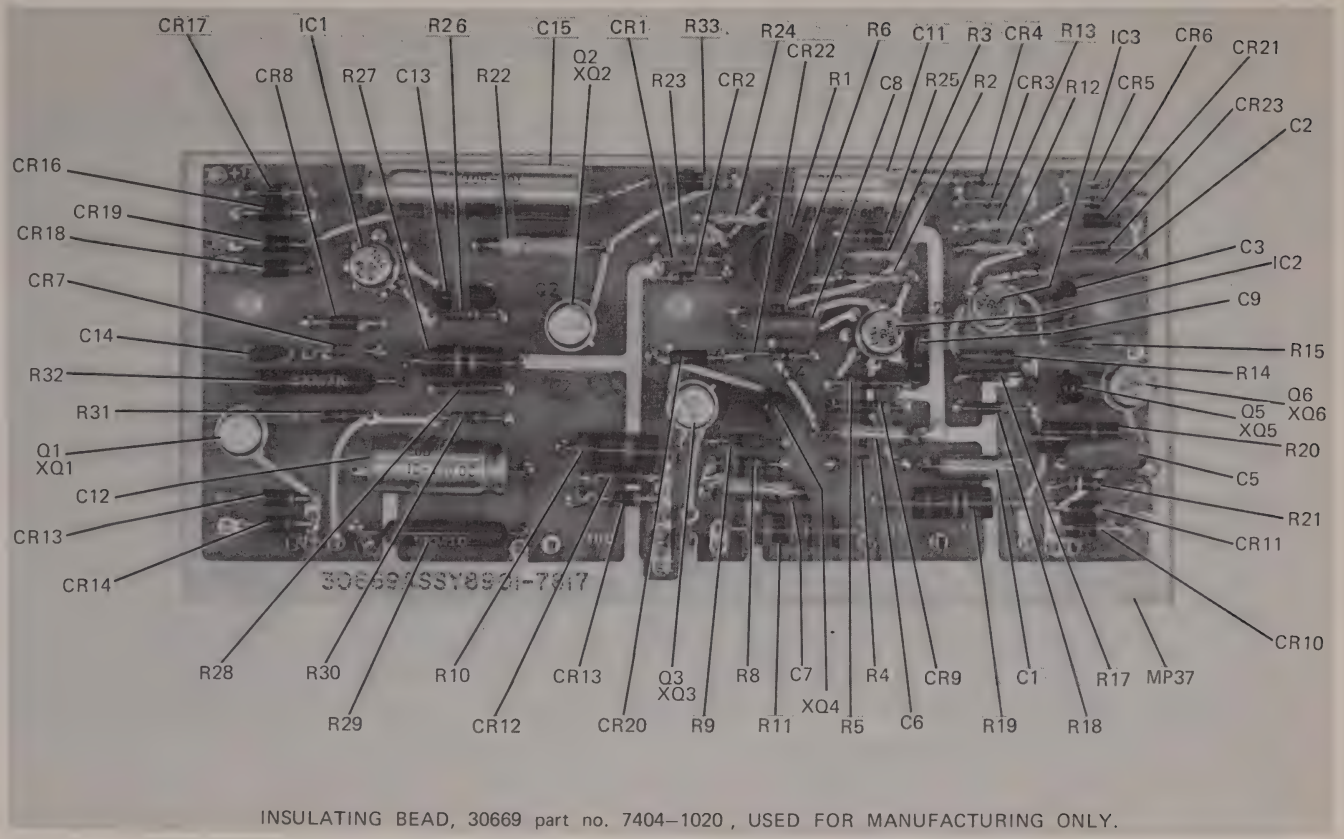

Figure A-21. Low Voltage Printed Circuit Assembly (A1A2A6A1) (Sheet 1 of 2)

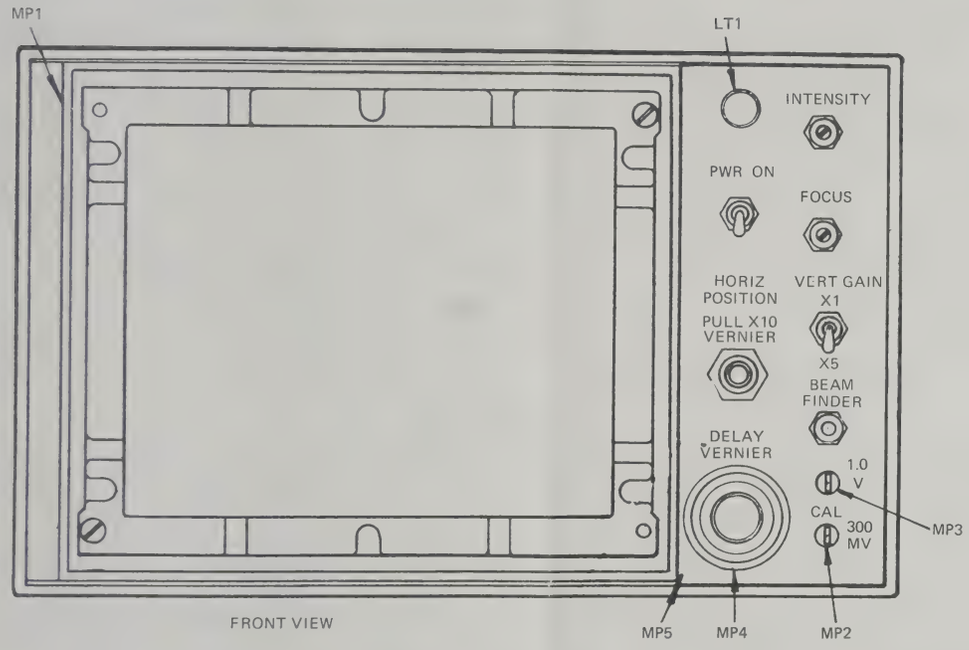

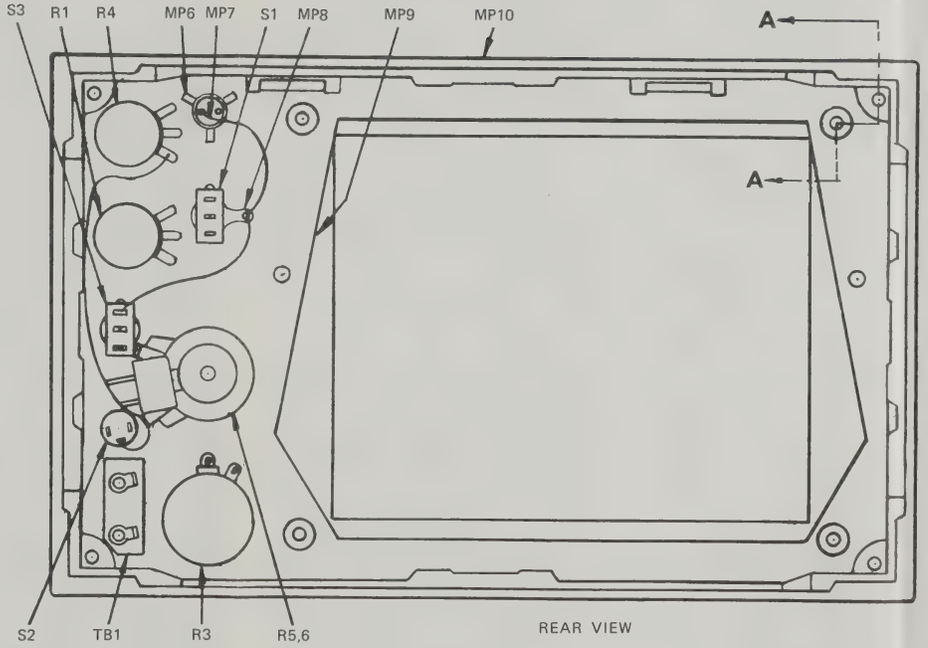

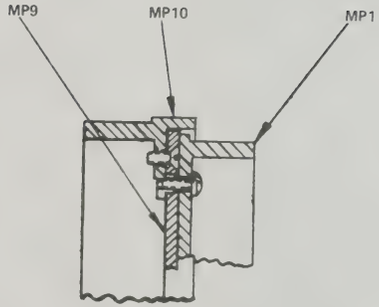

FOR USE ON AN/USM-281E ONLY. REFER TO CHAPTER 7 FOR AN/USM-281D CONFIGURATION.

Figure A-20. Display Panel Assembly (A1A1A6)

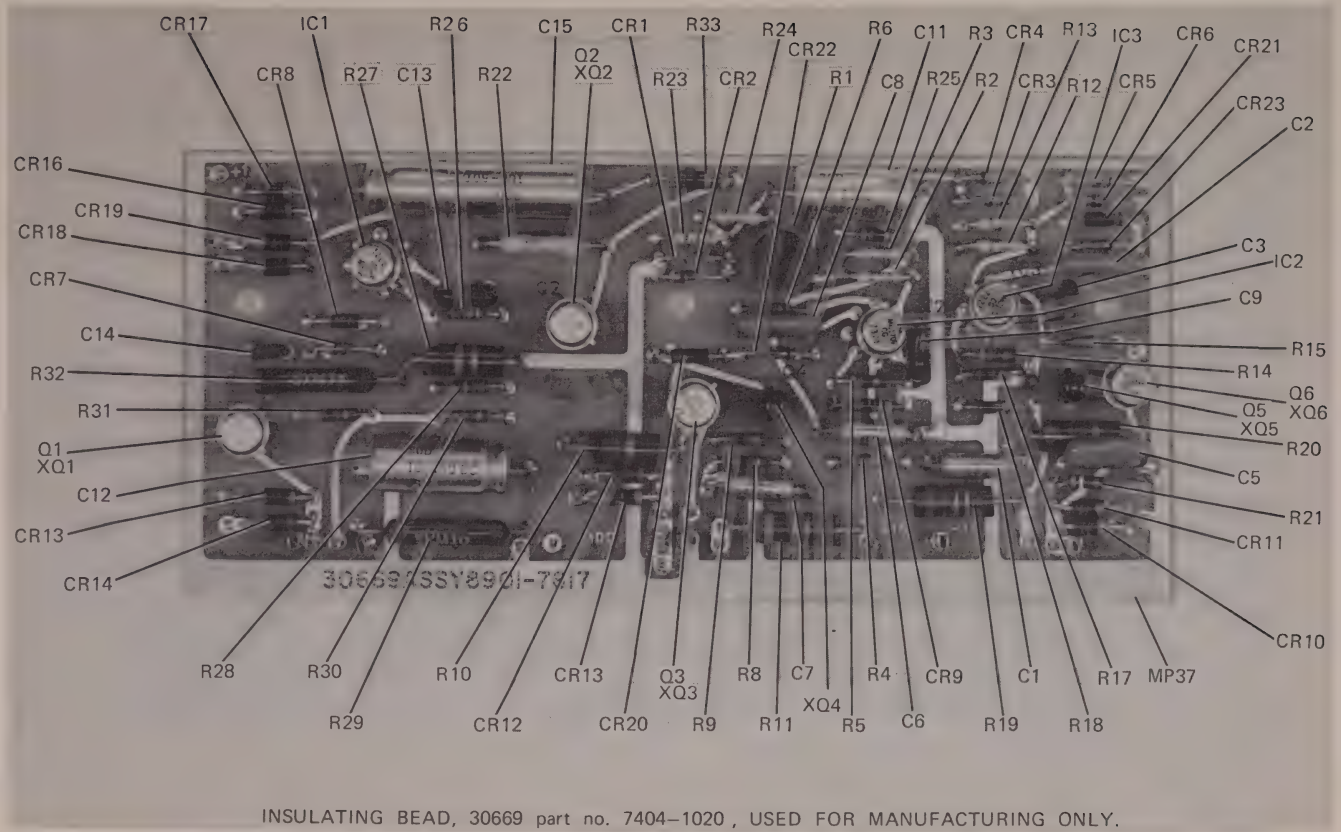

Figure A-21. Low Voltage Printed Circuit Assembly (A1A2A6A1) (Sheet 1 of 2)

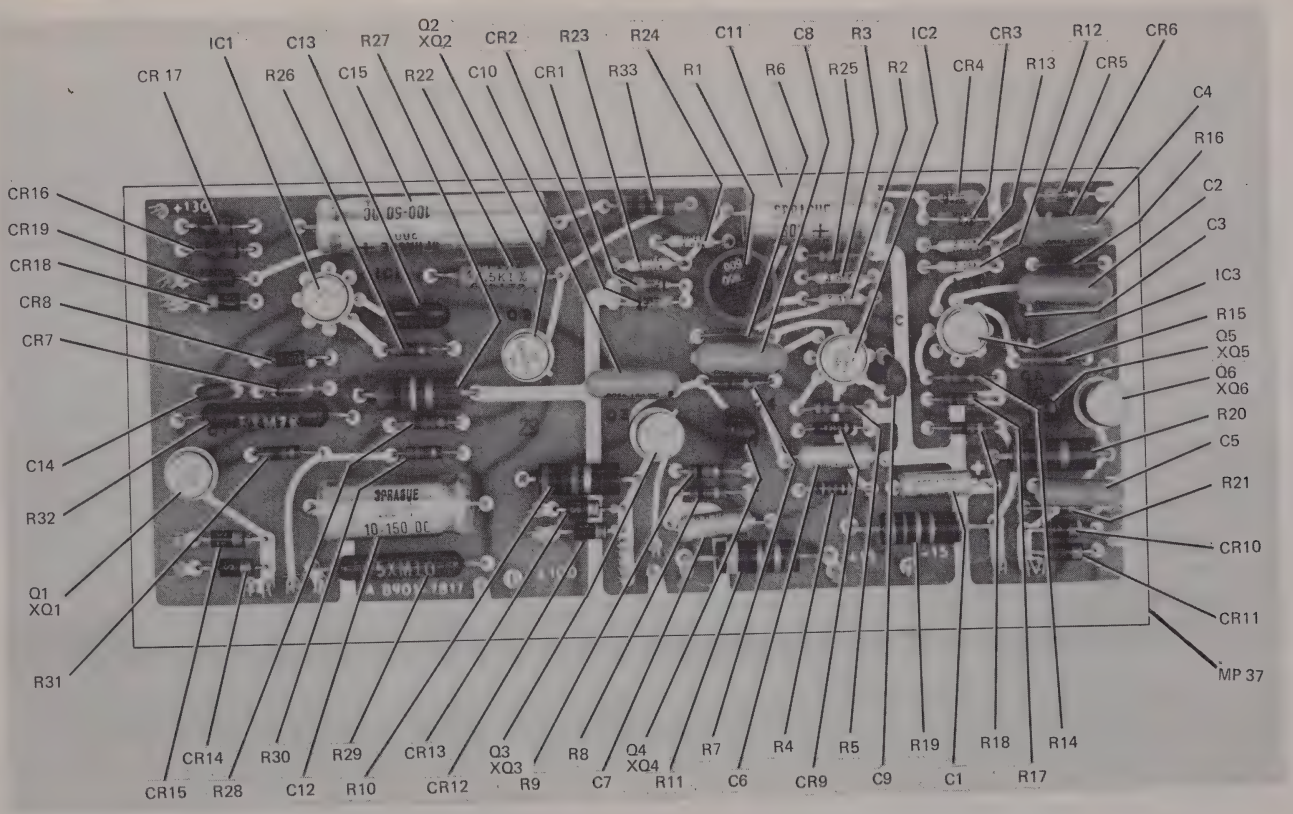

Figure A-21. Low Voltage Printed Circuit Assembly (A1A2A6A1) (Sheet 2 of 2)

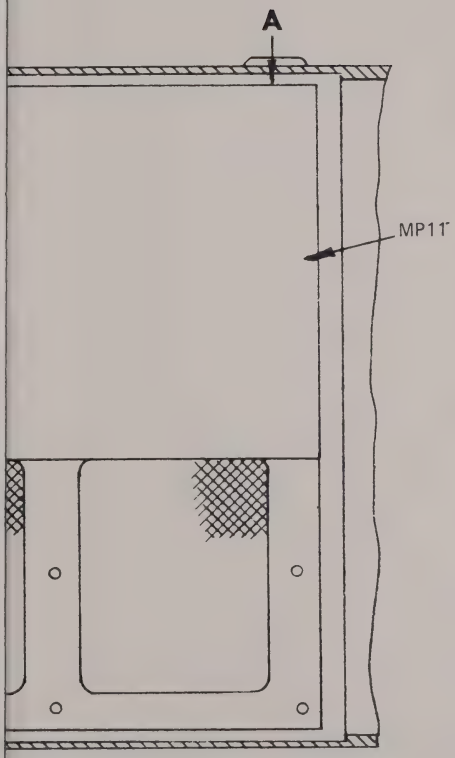

Figure A-22. Main Frame Cover (A1A3)

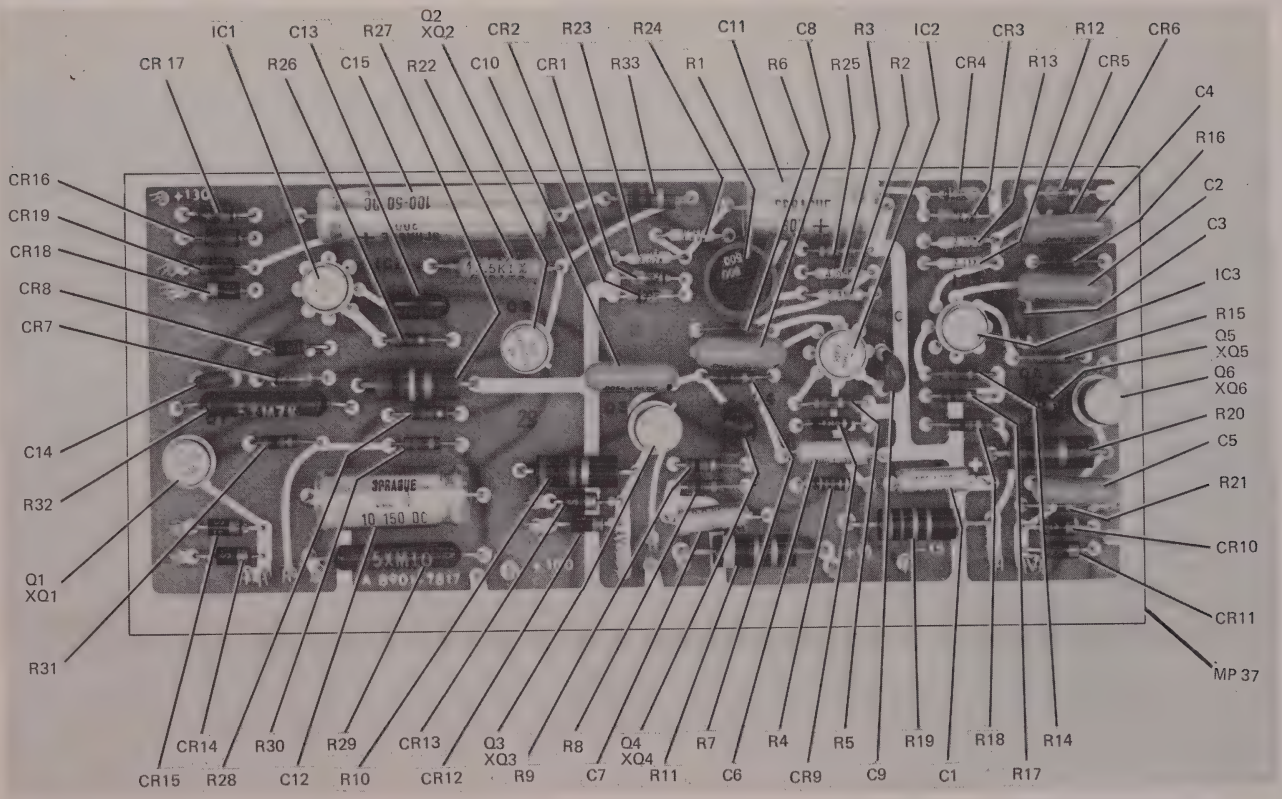

Figure A-21. Low Voltage Printed Circuit Assembly (A1A2A6A1) (Sheet 2 of 2)

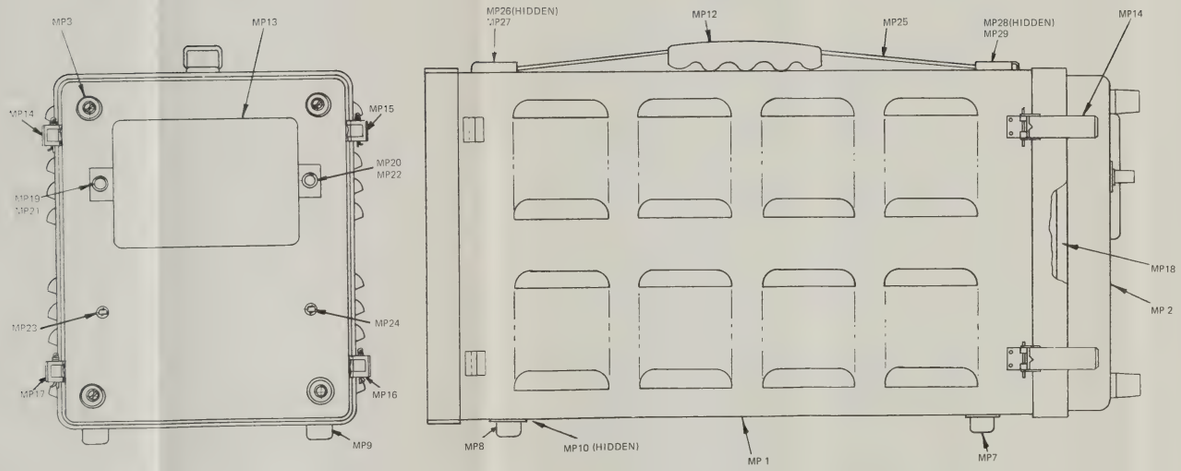

Figure A-22. Main Frame Cover (A1A3)

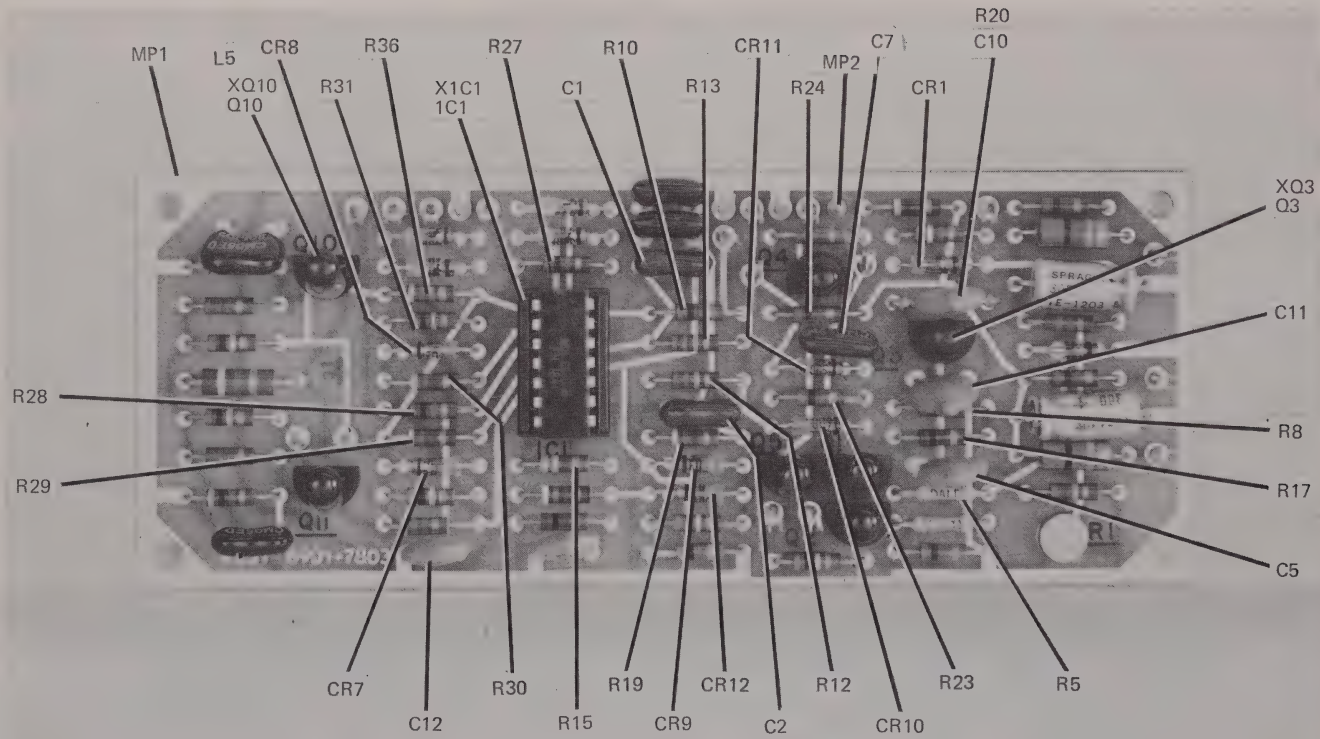

INSULATING BEAD,30669 part no.7404-1020,IS USED ONLY FOR MANUFACTURING AND NOT FOR REPAIR.

Figure A-23. Logic Printed Circuit Assembly (A2A3) (Sheet 1 of 2)

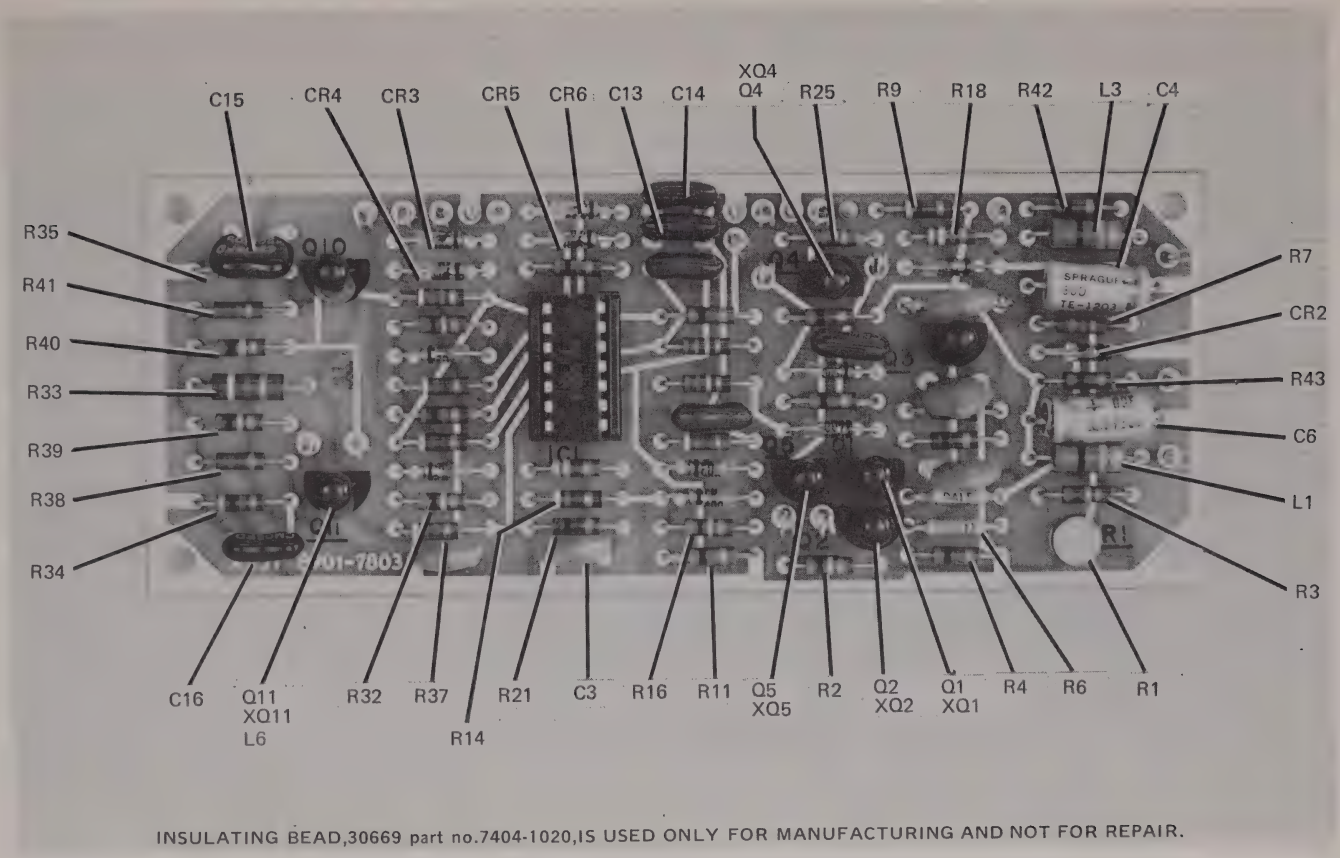

Figure A-23. Logic Printed Circuit Assembly (A2A3) (Sheet 2 of 2)

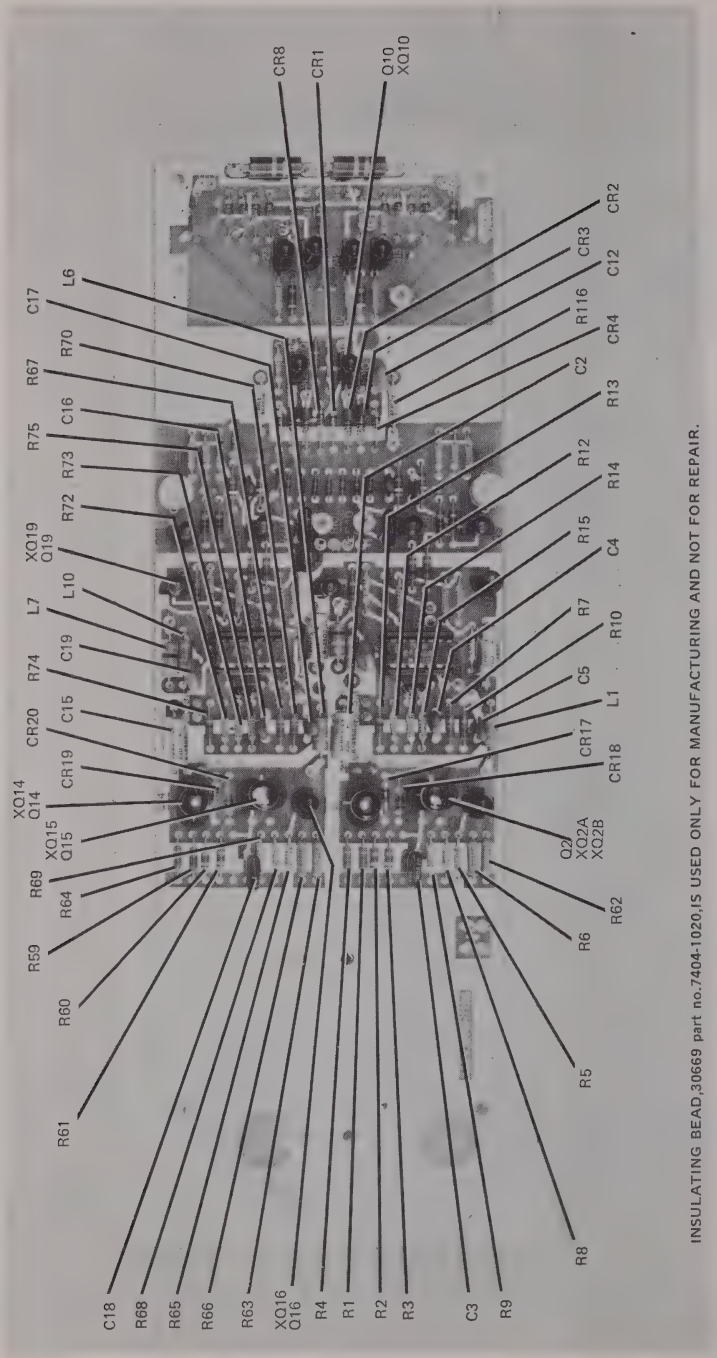

Figure A-24. Vertical Pre-Amplifier (A2A6) (Sheet 1 of 3)

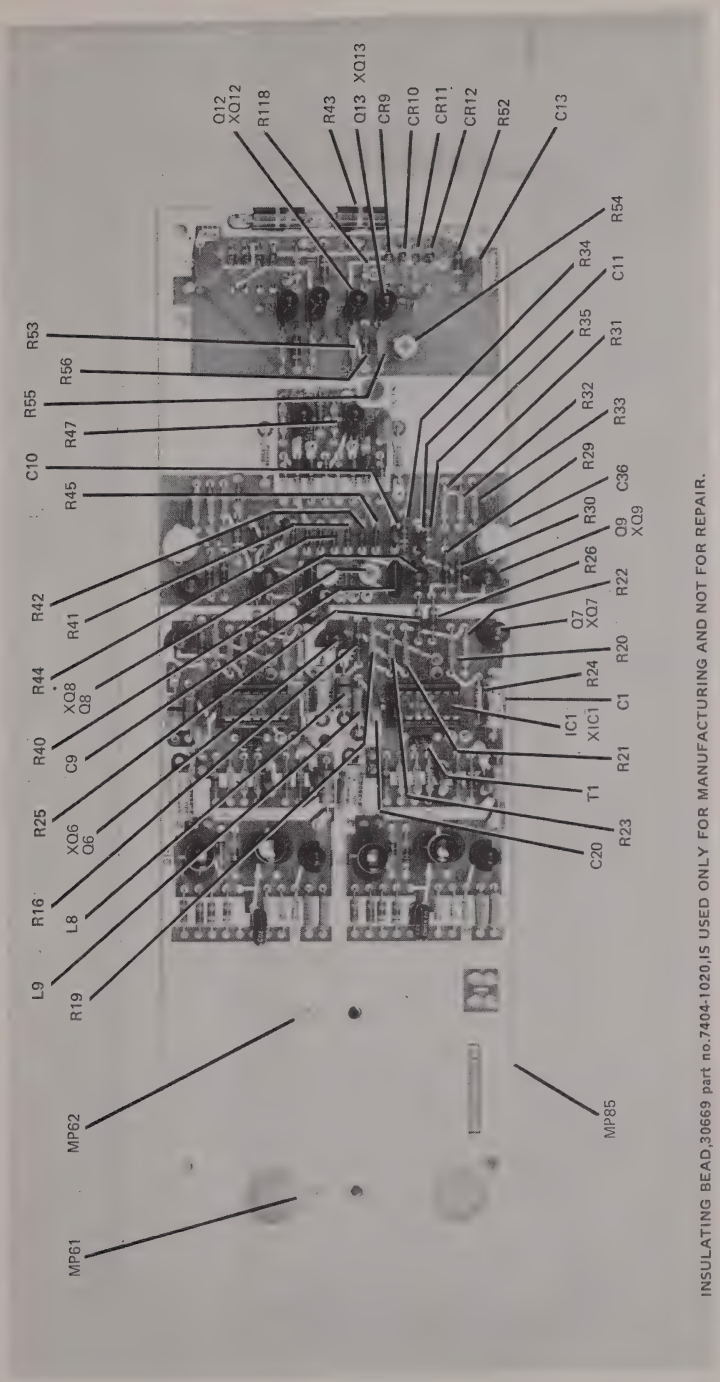

Figure A-24. Vertical Pre-Amplifier (A2A6) (Sheet 2 of 3)

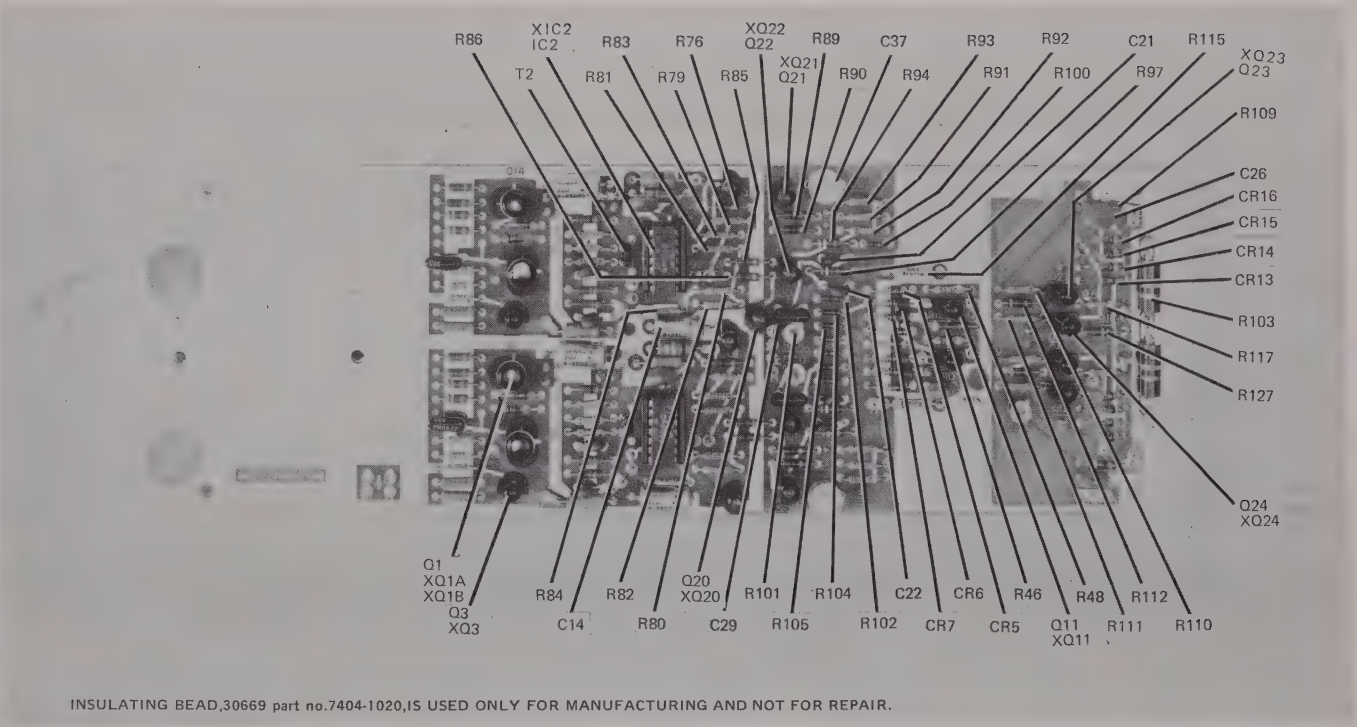

Figure A-24. Vertical Pre-Amplifier (A2A6) (Sheet 3 of 3)

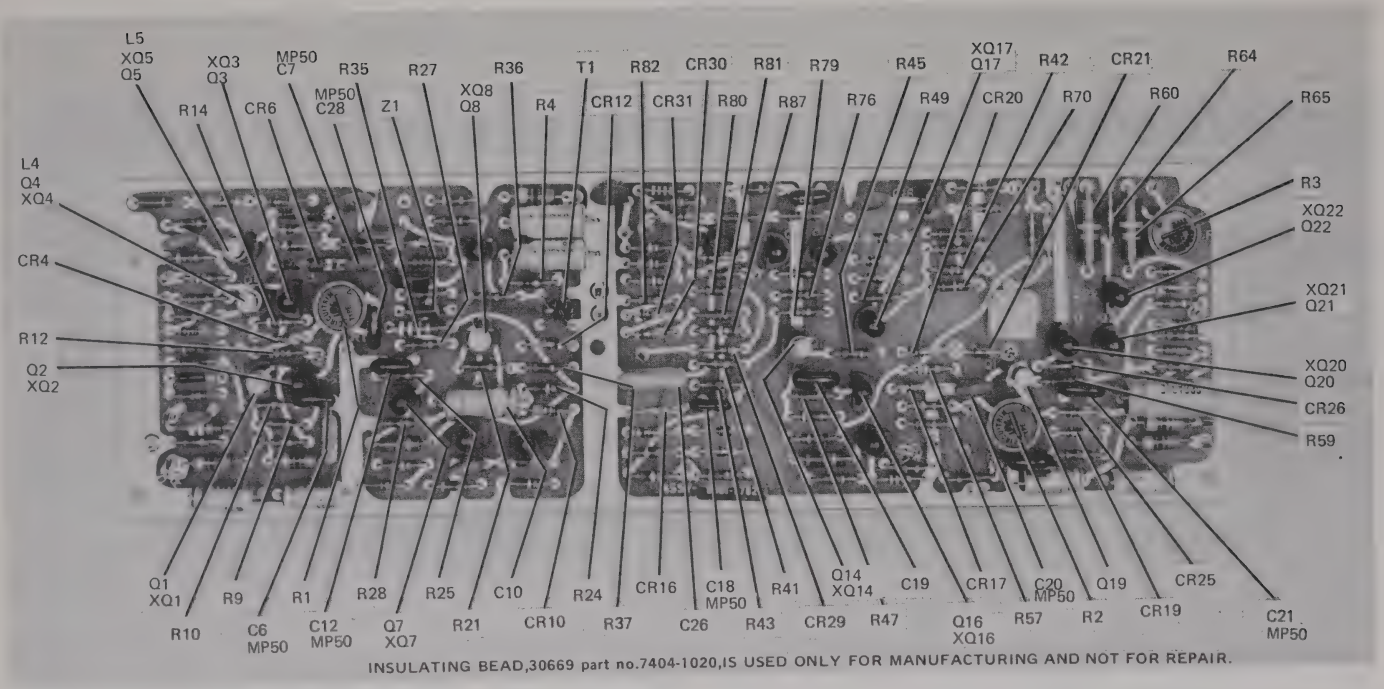

Figure A-25. Main Sweep Assembly (A3A2) (Sheet 1 of 3)

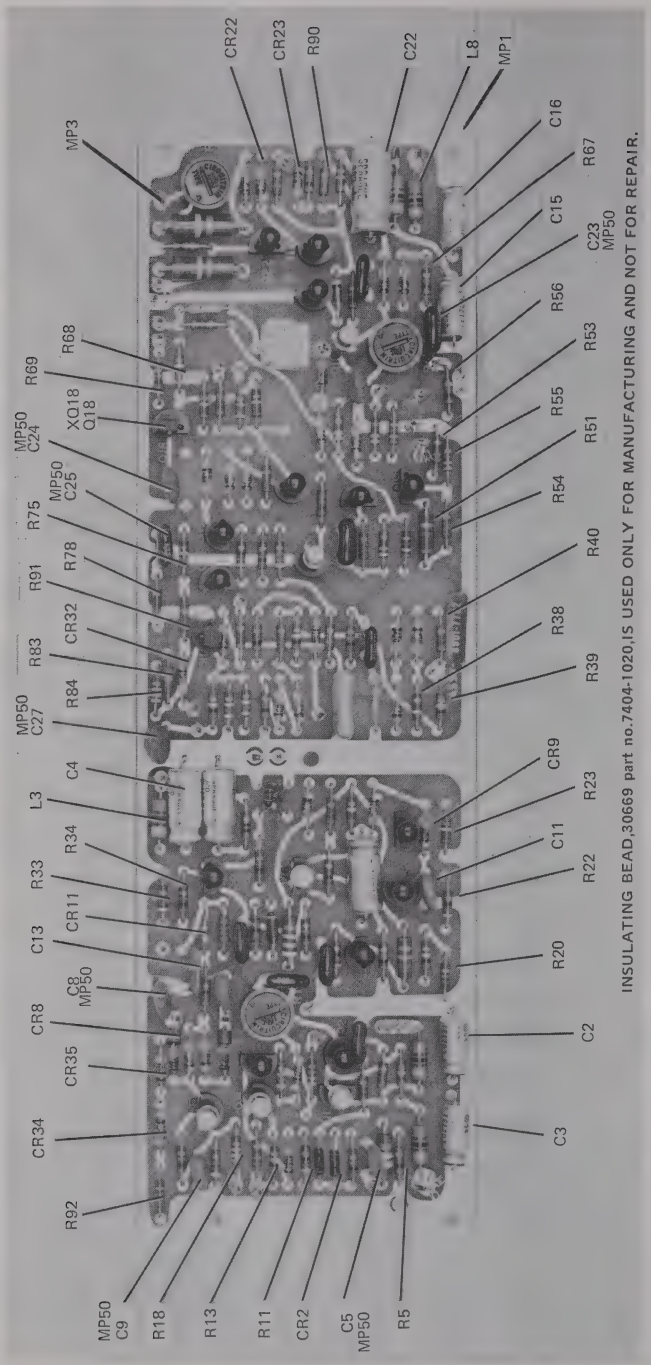

Figure A-25. Main Sweep Assembly (A3A2) (Sheet 2 of 3)

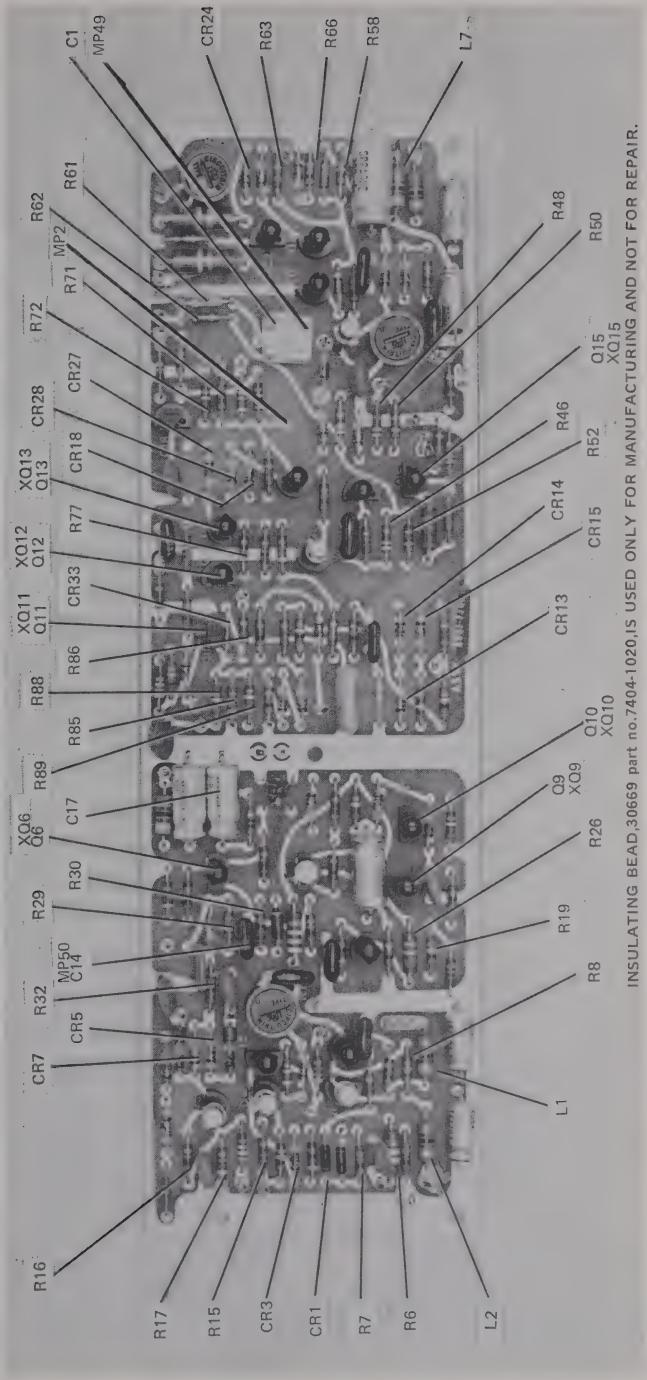

Figure A-25. Main Sweep Assembly (A3A2) (Sheet 3 of 3)

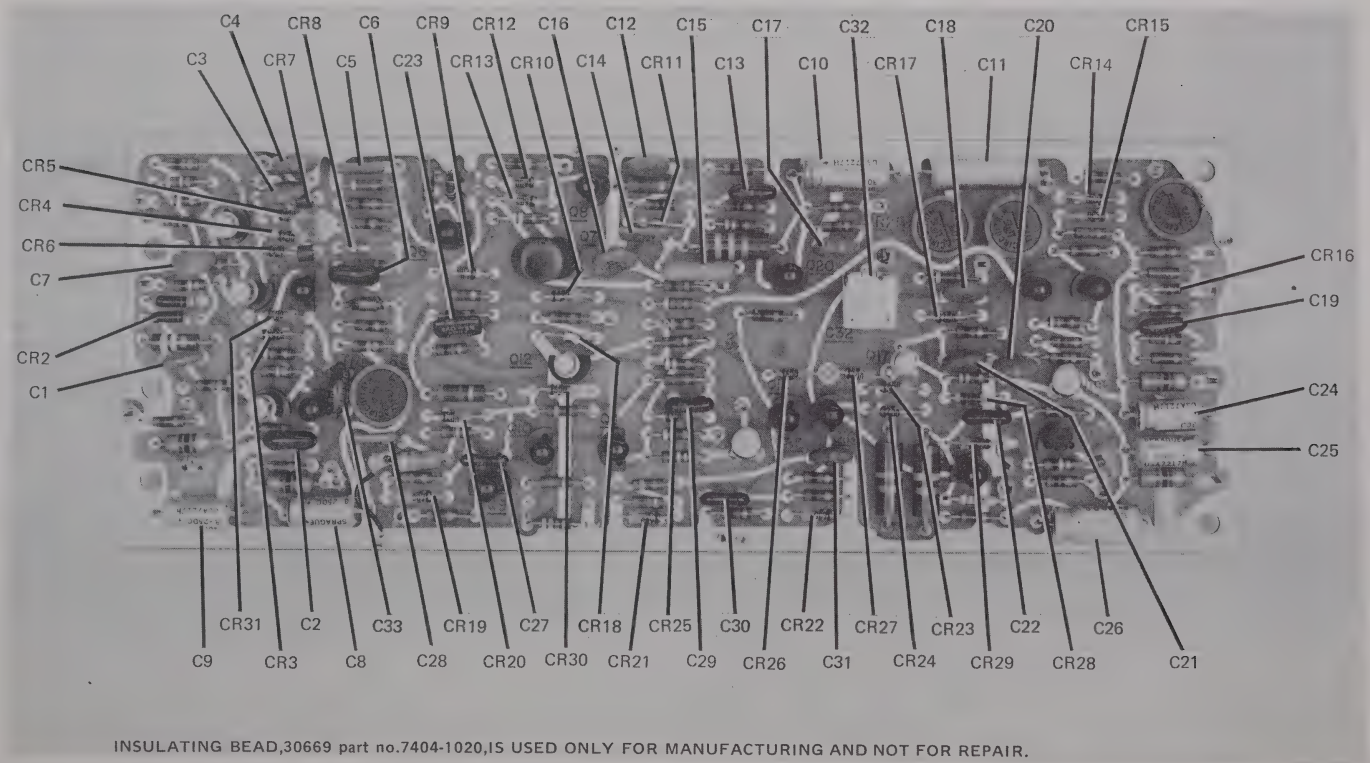

Figure A-26. Delayed Sweep Assembly (A3A5) (Sheet 1 of 3)

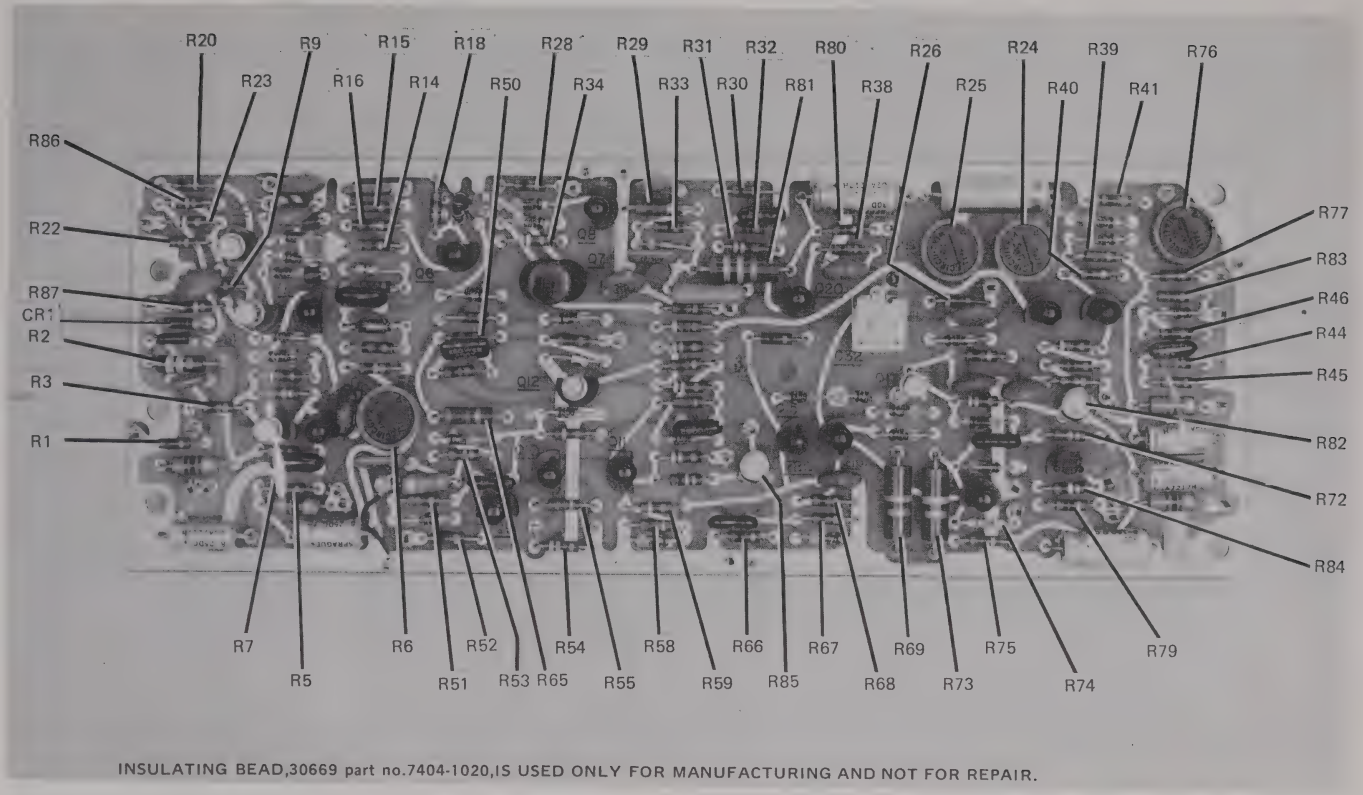

Figure A-26. Delayed Sweep Assembly (A3A5) (Sheet 2 of 3)

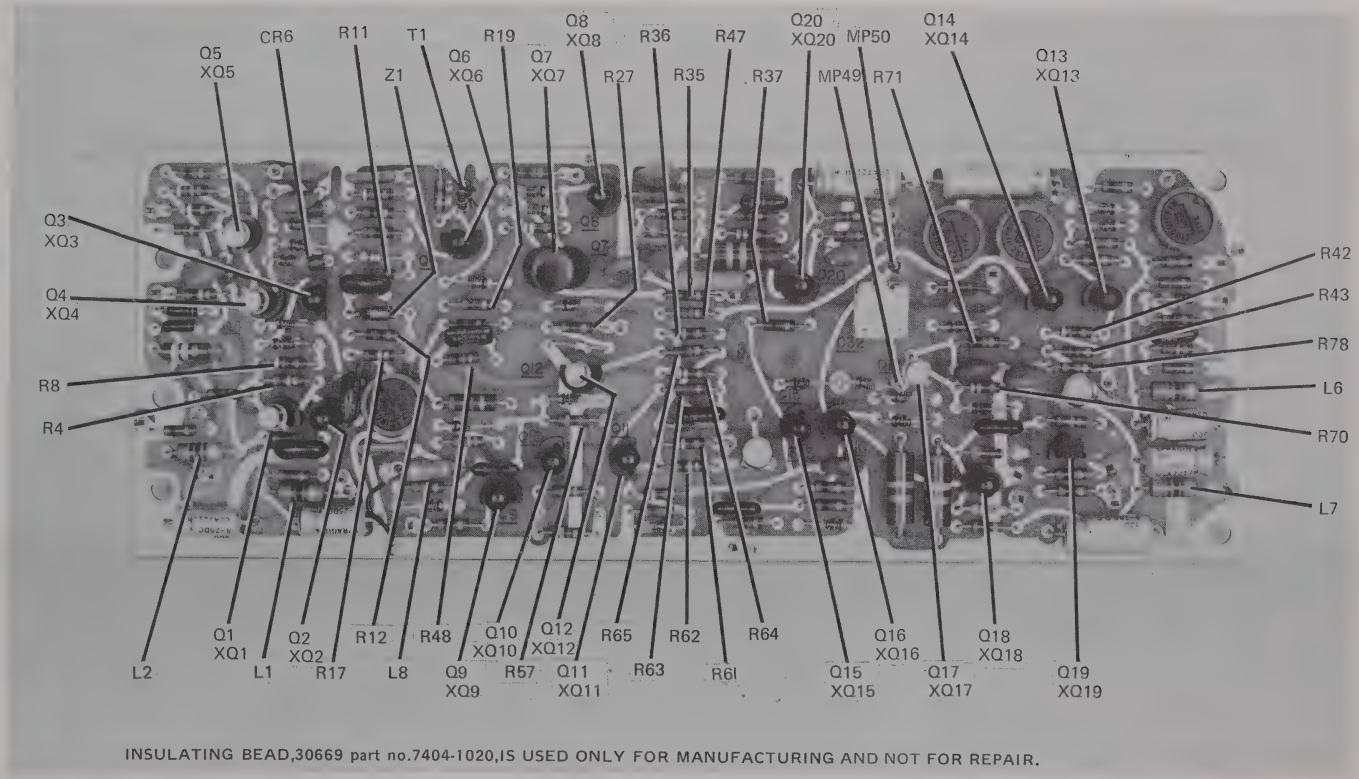

Figure A-26. Delayed Sweep Assembly (A3A5) (Sheet 3 of 3)

FOR USE ON AN/USM-281E ONLY. REFER TO CHAPTER 7 FOR AN/USM-281D CONFIGURATION.

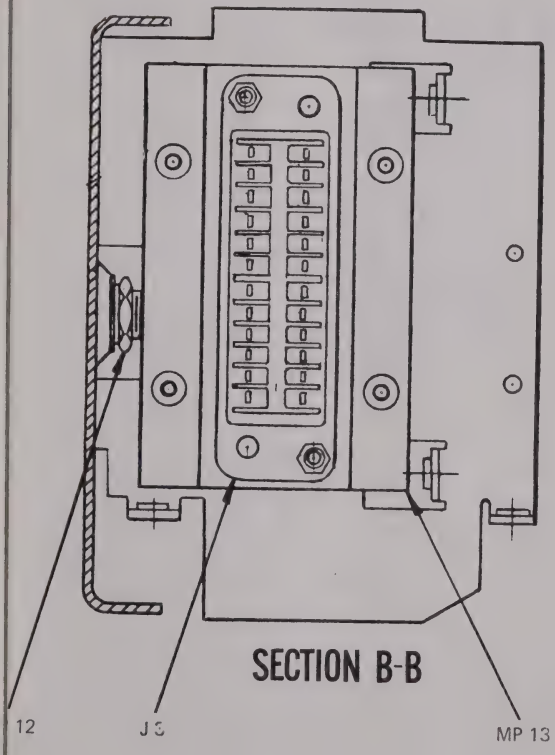

Figure A-27. Time Base Function Assembly (A3A6) Sheet 1 of 2)

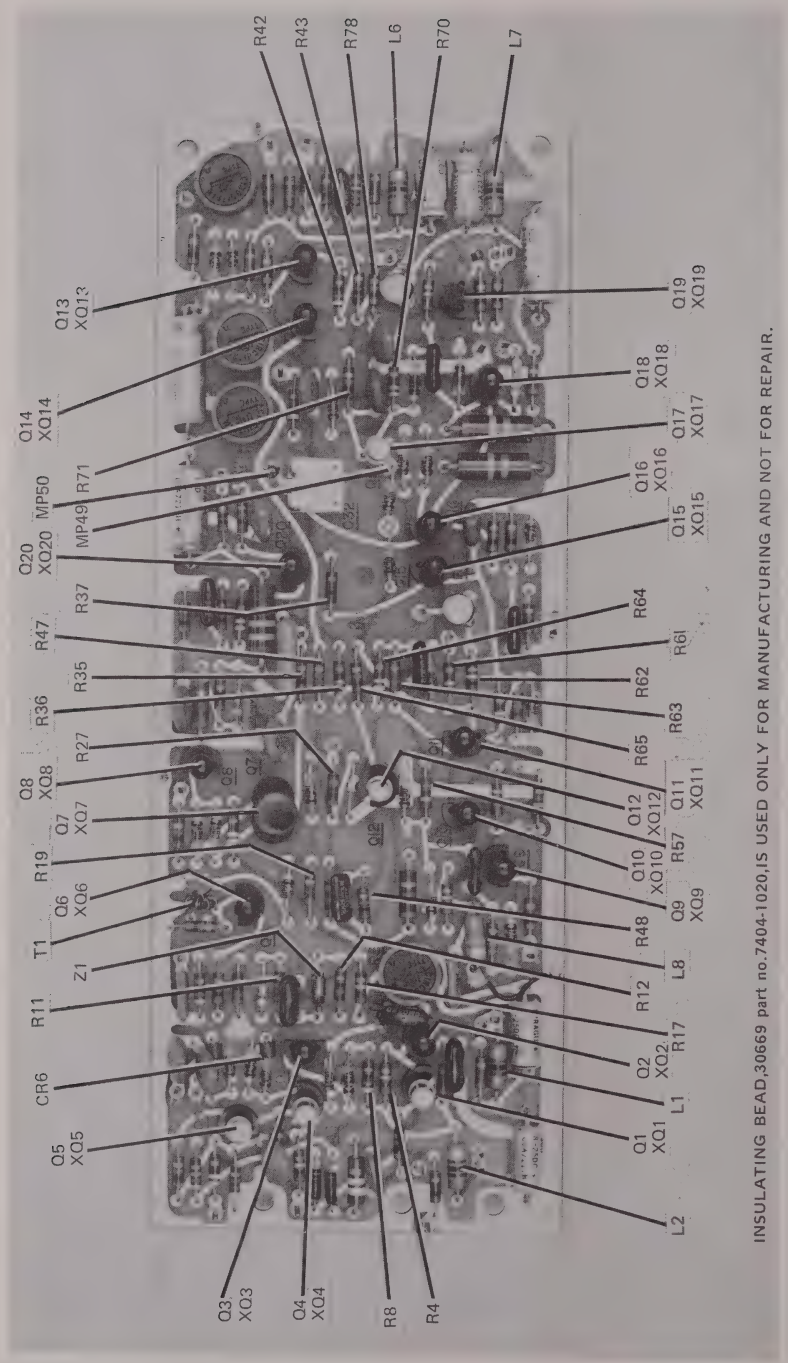

Figure A-26. Delayed Sweep Assembly (A3A5) (Sheet 3 of 3)

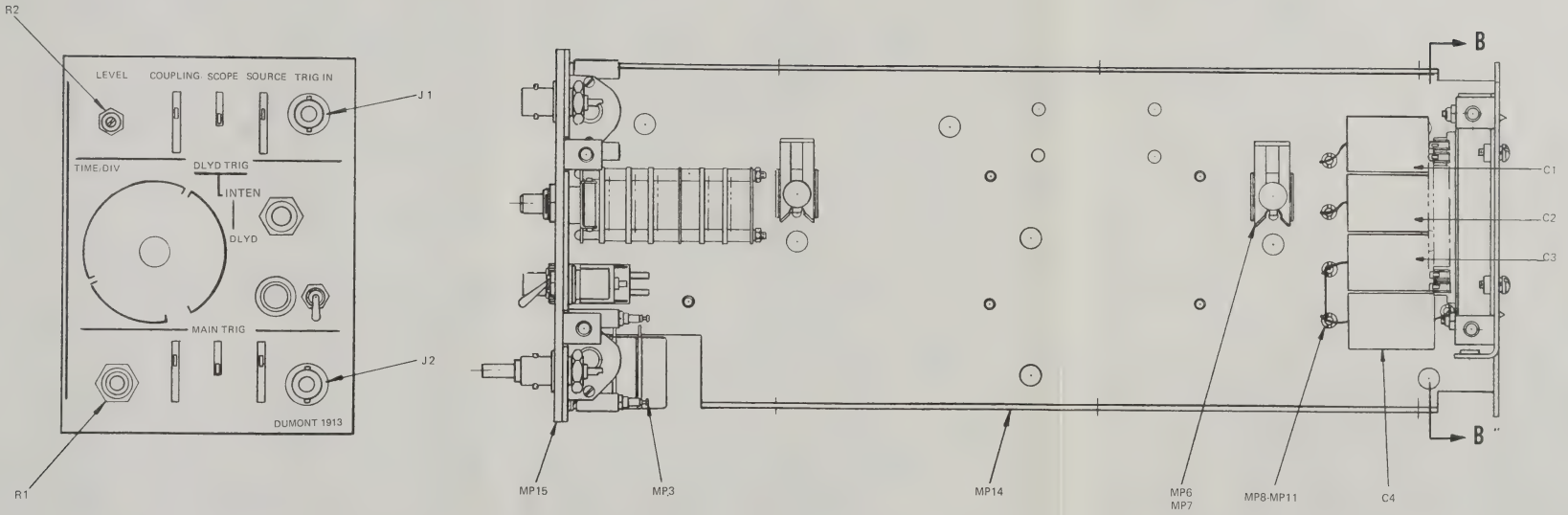

FOR USE ON AN/USM-281E ONLY. REFER TO CHAPTER 7 FOR AN/USM-281D CONFIGURATION

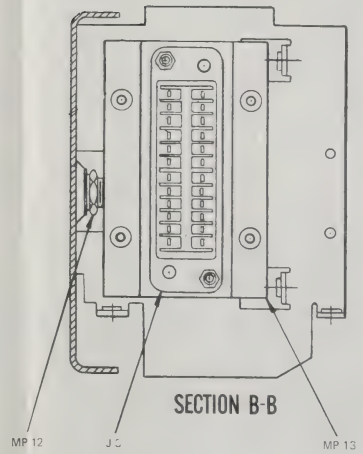

Figure A-27. Time Base Function Assembly (A3A6) Sheet 1 of 2)

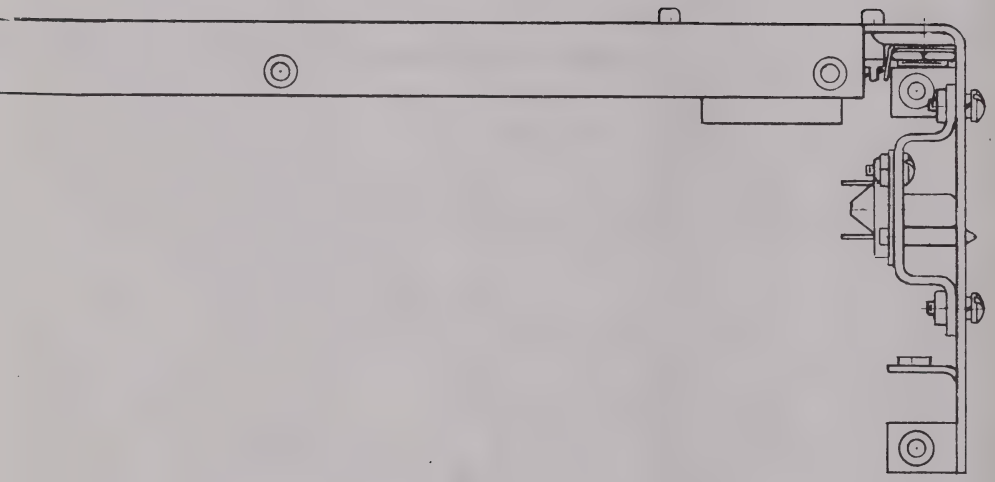

FOR USE ON AN/USM-281E ONLY. REFER TO CHAPTER 7 FOR AN/USM-281D CONFIGURATION.

Figure A-27. Time Base Function Assembly (A3A6) (Sheet 2 of 2)

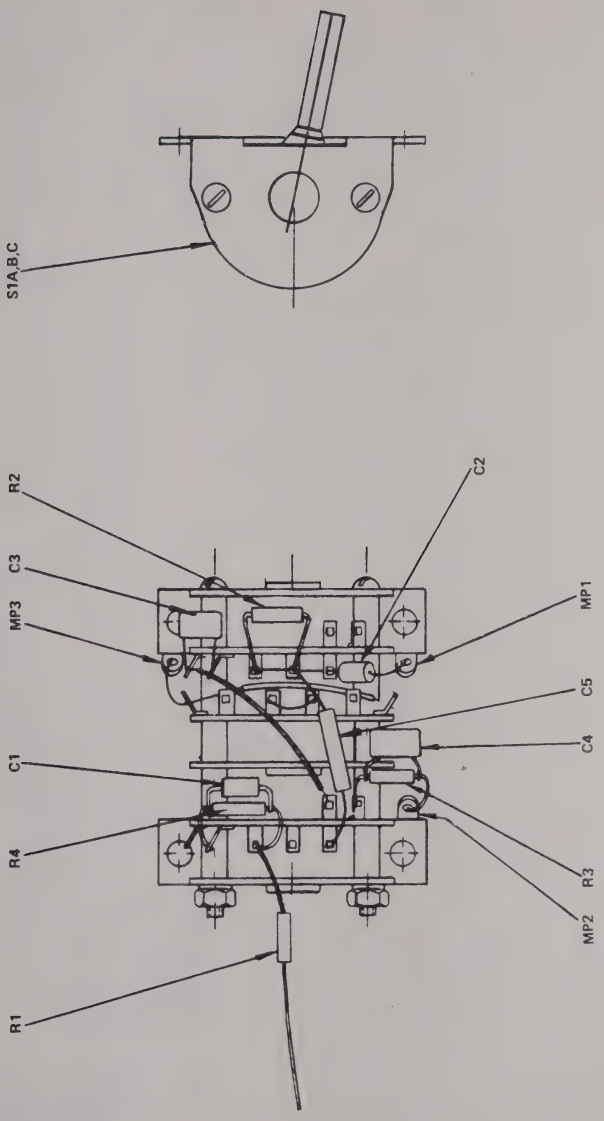

Figure A-28. Trigger Switch Assembly (A3A6A1)

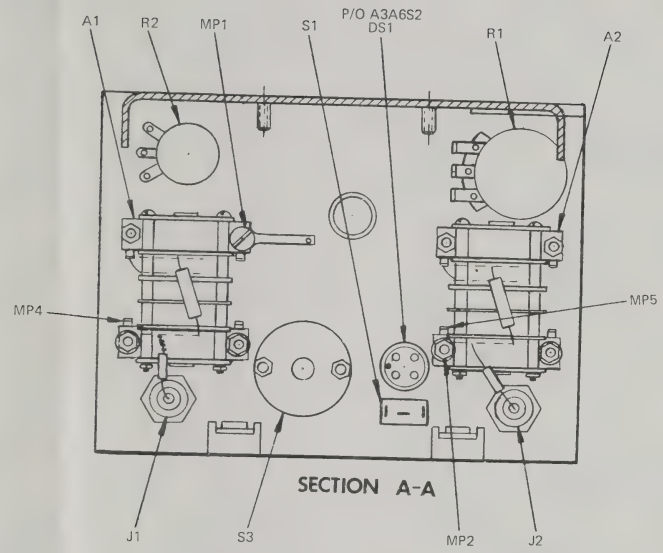

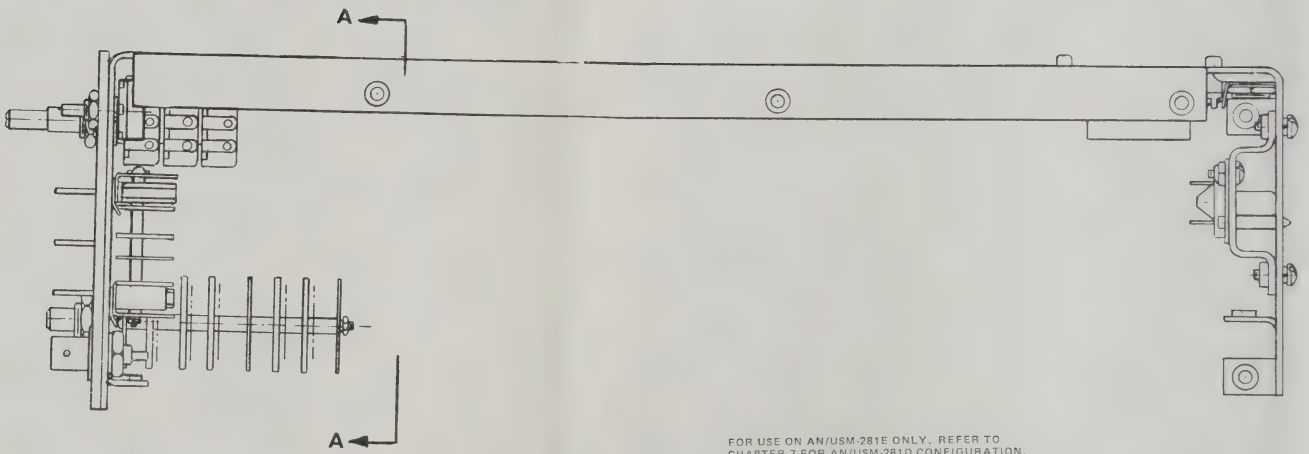

FOR USE ON AN/USM-281E ONLY. REFER TO CHAPTER 7 FOR AN/USM-281D CONFIGURATION.

Figure A-27. Time Base Function Assembly (A3A6) (Sheet 2 of 2)

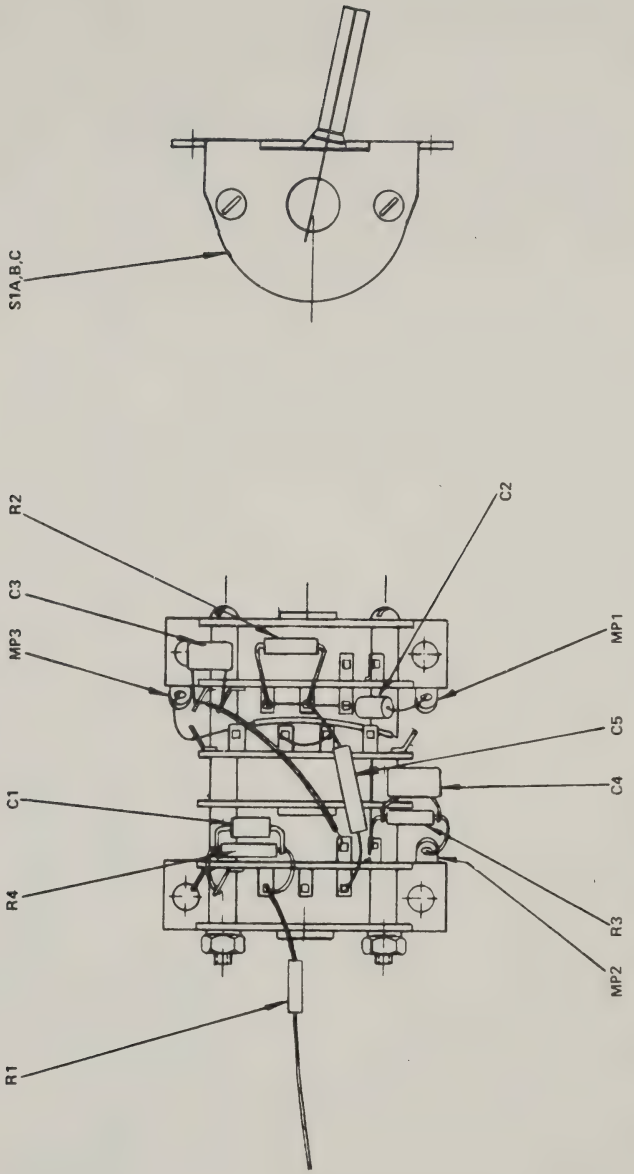

Figure A-28. Trigger Switch Assembly (A3A6A1)

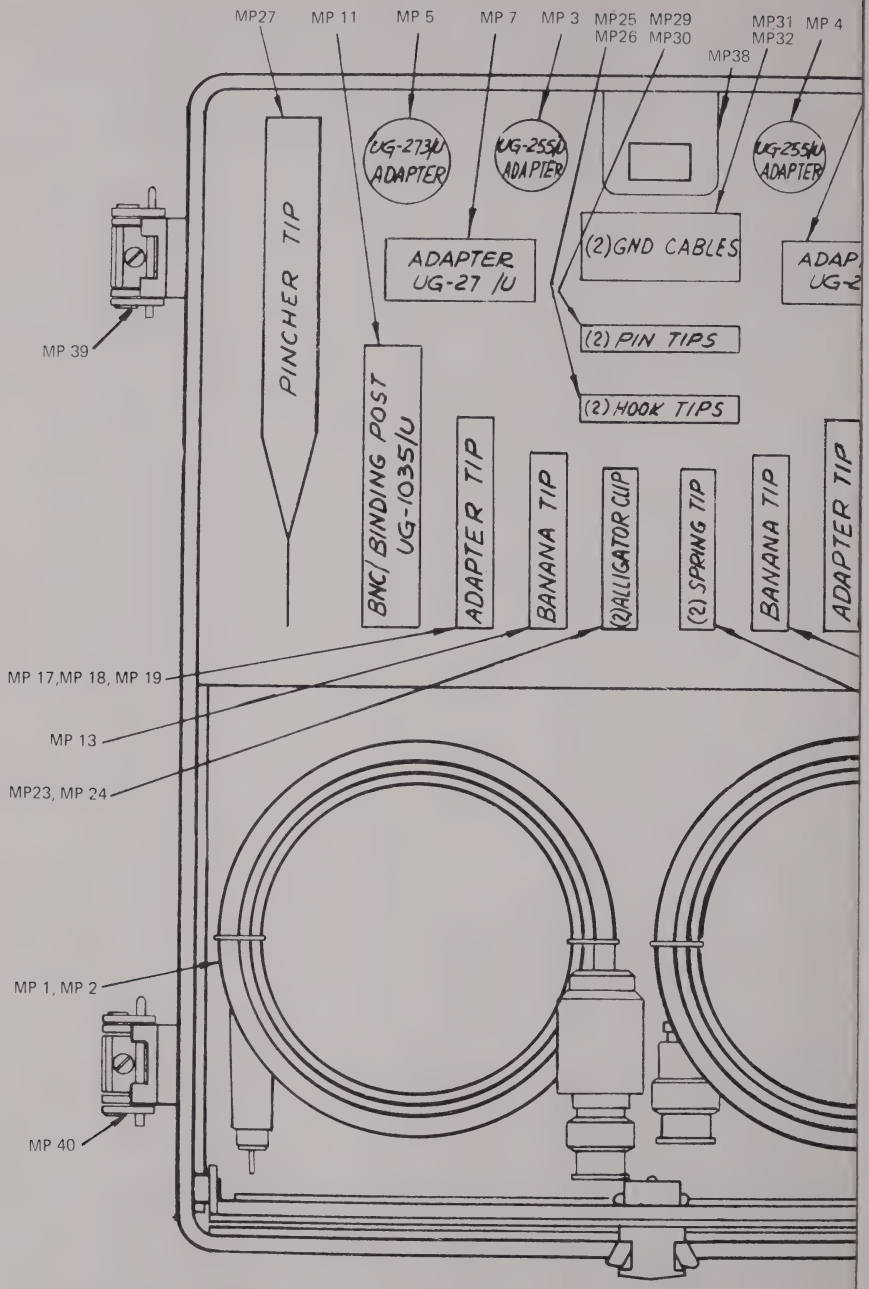

Figure A-29. Front Cover Assembly (A4)

ALPHABETICAL INDEX

Subject	Paragraph Figure, Table, Number
A	
Adapters and tee-connectors	8-19
Adjustments:	
Vertical Amplifier	6-22, F 6-7
Oscilloscope Assembly	6-4
Adjustments and Test Points:	
Vertical Amplifier	6-22, F 6-7
Oscilloscope Assembly	6-4
Astigmatism Adjustment	6-14, F 5-25, F 5-29
Attenuator Removal	4-12, F 4-5
C	
Cable Assemblies	8-15
Channel A Attenuator A2A1, Location of Parts	T 7-2, F 7-15
Channel B Attenuator A2A2, Location of Parts	T 7-2, F 7-15
Controls and Connectors:	
Front Panel	T 2-3, F 2-1
Rear Panel	T 2-3, F 2-2
Cover Removal	4-8, F 4-1
Cover Replacement	4-9, F 4-2
D	
Deflection Factor	4-21
Delay Line Termination Adjustment	6-28, F 5-21, F6-10, F 6-11
Delayed Trigger and Sweep Generator:	
Functional Circuit Description	3-43, F 3-12
Trouble Shooting	F 6-21
Delayed Trigger and Sweep Adjustments	6-46, F 5-24, F 6-21, F 6-22
Description:	
Controls and Connectors	F 2-1, F 2-2
General	1-3
Display Mode Check	4-51
E	
Equipment and Publications Required but not Supplied	T 1-3
Equipment, Accessories and Documents Supplied	T 1-2
F	
Failure Analysis	F 5-1, F 5-2, F 5-3, F 5-4
Front-panel Controls and Connectors	2-3, F 2-1
Functional Section Description	3-1
Fuse Location	F 6-25
G	
General Description	1-3

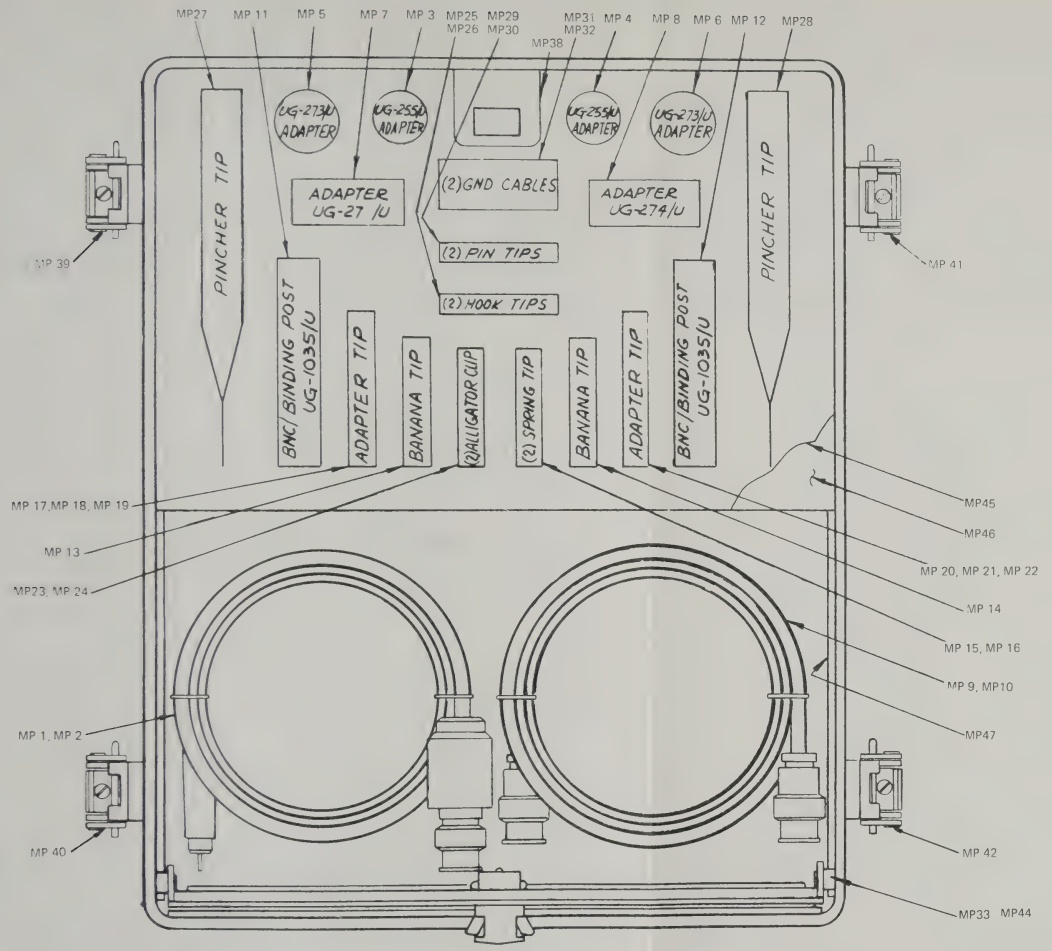

Figure A-29. Front Cover Assembly (A4)

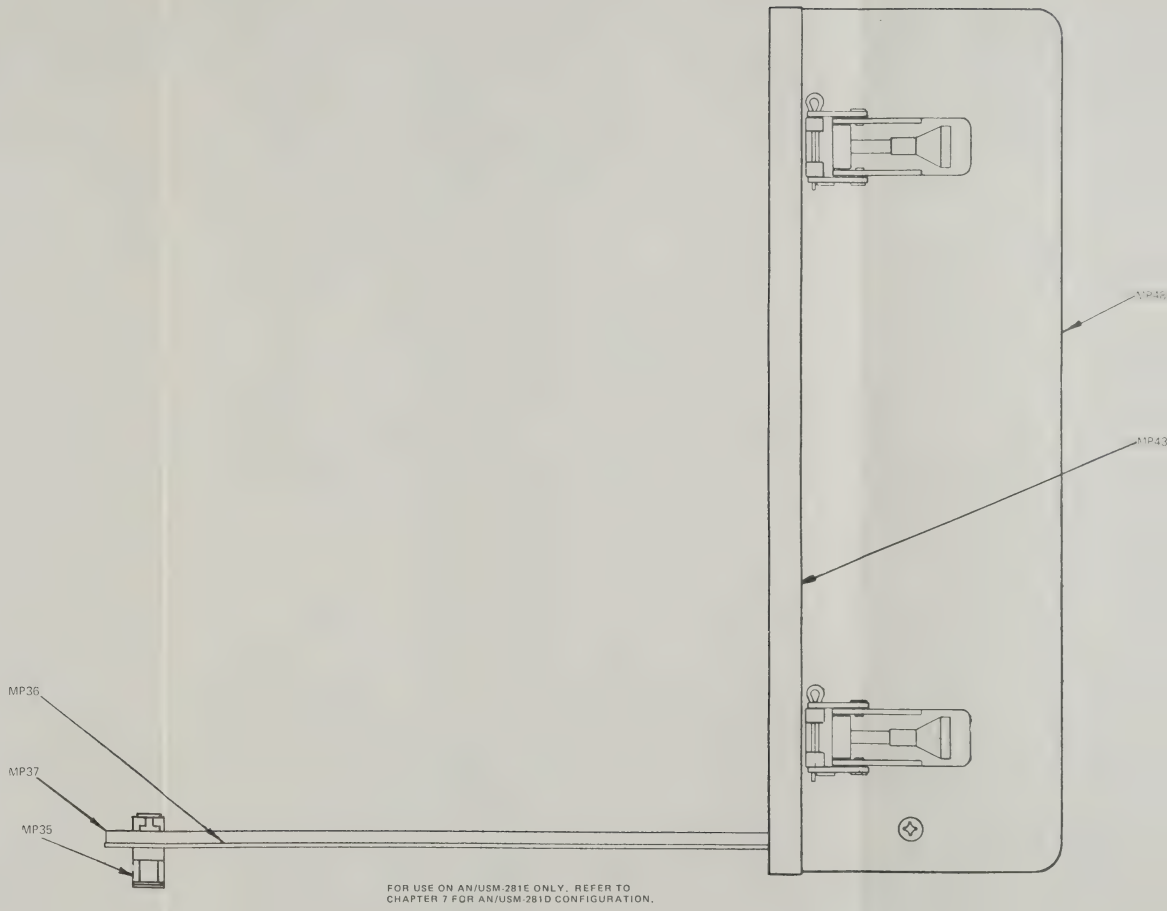

ALPHABETICAL INDEX

Subject	Paragraph Figure, Table, Number
A	
Adapters and tee-connectors	8-19
Adjustments:	
Vertical Amplifier	6-22, F 6-7
Oscilloscope Assembly	6-4
Adjustments and Test Points:	
Vertical Amplifier	6-22, F 6-7
Oscilloscope Assembly	6-4
Astigmatism Adjustment	6-14, F 5-25, F 5-29
Attenuator Removal	4-12, F 4-5
C	
Cable Assemblies	8-15
Channel A Attenuator A2A1, Location of Parts	T 7-2, F 7-15
Channel B Attenuator A2A2, Location of Parts	T 7-2, F 7-15
Controls and Connectors:	
Front Panel	T 2-3, F 2-1
Rear Panel	T 2-3, F 2-2
Cover Removal	4-8, F 4-1
Cover Replacement	4-9, F 4-2
D	
Deflection Factor	4-21
Delay Line Termination Adjustment	6-28, F 5-21, F6-10, F 6-11
Delayed Trigger and Sweep Generator:	
Functional Circuit Description	3-43, F 3-12
Trouble Shooting	F 6-21
Delayed Trigger and Sweep Adjustments	6-46, F 5-24, F 6-21, F 6-22
Description:	
Controls and Connectors	F 2-1, F 2-2
General	1-3
Display Mode Check	4-51
E	
Equipment and Publications Required but not Supplied	T 1-3
Equipment, Accessories and Documents Supplied	T 1-2
F	
Failure Analysis	F 5-1, F 5-2, F 5-3, F 5-4
Front-panel Controls and Connectors	2-3, F 2-1
Functional Section Description	3-1
Fuse Location	F 6-25
G	
General Description	1-3

ALPHABETICAL INDEX (Cont)

Subject	Paragraph Figure, Table, Number
H	
High Frequency Bandwidth Check	4-16
High Voltage Power Supply:	
Functional Circuit Description	3-50
Location of Parts	F 7-6, T 7-2
Trouble Shooting	6-10, F 6-5, F 6-6
High Voltage Power Supply Adjustment	6-10, F 6-5, F 6-6
High Voltage Supply Replacement	4-13, F 4-6
Horizontal Amplifier:	
Functional Circuit Description	3-45, F 3-13
Location of Parts	T 7-2, F 7-6
Trouble Shooting	6-40, F 5-25, F 6-17
Horizontal Amplifier Sweep Adjustment	6-43, F 5-23, F5-25, F 6-18, F 6-19
I	
Initial Turn-on and Adjustment	2-3, T 2-3
Intensity Limit Adjustment	6-14, F 5-25, F 5-29
Interconnection Schematic Diagram	F 5-30
L	
List of Manufacturers	T 7-5
Location of Parts, General	T 7-2
Logical Trouble Shooting	F 5-1, F 5-2, F 5-3, F 5-4
Low Voltage Power Supply:	
Functional Circuit Description	3-47, F 5-28
Location of Parts	T 7-2
Trouble Shooting	6-6, F 5-28, F 6-3, F 6-4
Low Voltage Power Supply Adjustment	6-6, F 6-3, F 6-4
Low Voltage Printed Circuit Board A1A2A6,	
Location of Parts	T 7-2, F 7-8, F 7-12
M	
Main and Delay Sweep Checks	4-41
Main Trigger and Sweep Generator:	
Functional Circuit Description	3-36, F 3-11
Trouble Shooting	4-41, F 4-12
Maintenance:	
Actions	T 4-1,
Parts List	T 4-2, T 7-2
Manufacturers, List of	T 7-5
Miscellaneous Component Replacement	4-7
Mode (common) Rejection Ratio	4-31
O	
Operating Procedures	2-3, T 2-3, T 2-4, T 2-5
Oscilloscope AN/USM-281D	1-1

ALPHABETICAL INDEX (Cont)

Subject	Paragraph Figure, Table Number
Oscilloscope Assembly:	
Adjustments	6-4
General Description	1-3
Location of Parts	T 7-2, F 7-1 thru 7-29
Operational Description	2-5
Reference Data	T 1-1
Block Diagram	F 5-18
Test Points	5-14
Oscilloscope Cover Removal	4-8, 6-4, F 4-1, F 6-1
Overall Oscilloscope:	
Functional Block Diagram	F 3-1
Functional Description	3-2
Servicing Block Diagram	F 5-1, F 5-2, F 5-3, F5-4
Trouble Shooting	5-1

P

Parts List, Maintenance	T 7-2
Plug-in Unit Removal and Installation	8-9
Power Requirements	T 1-1
Preventive Maintenance	4-4

R

Rear-panel Controls and Connectors	T 2-2
Reference Data	T 1-1
Reference Designations (Parts List)	T 7-2

S

Single or Dual Channel Operation	T 2-4, T 2-5

T

Test Equipment and Adapters Required for Reference Standards Procedures and Adjustment Procedures	T 1-3
Test Equipment Required for Trouble Shooting	T 1-3
Test Probes	T 1-1
Time Base Assembly:	
Location of Parts	T 7-2, F 7-23
Trace Alignment	6-16, F 5-29
Trigger and Gate Generator Circuit Board A3A6A1,	
Location of Parts	T 7-2, F 7-28
Trigger Output Level Adjustment	4-61
Trigger Sensitivity Check (Internal)	4-56
Trigger Sensitivity Check (External)	4-61
Trigger Synchronization Adjustment	6-34, F 5-29, F 6-15
Trouble Shooting:	
General (See Applicable Functional Section)	
Turn-on and Adjustment Procedure	2-7, T 2-3

ALPHABETICAL INDEX (Cont)

Subject	Paragraph Figure, Table, Number
U	
Unblanking Amplifier Adjustments	6-49
Unpacking and Handling	8-3
V	
Vertical Amplifier Gain Adjustment	6-22, F 5-22, F 6-7
Vertical Channel DC Balance Adjustment	6-20, F 5-19
Vertical Mode Check	4-36
Vertical Vernier Check	4-26
X	
X-Y Operating Procedures	T 2-6
X-YY Mode	T 2-7

☆ U.S. GOVERNMENT PRINTING OFFICE: 1974-719-301/z-179